P 145
2.4
2.5

ENGINEERING DRAWING

THE FRENCH DRAWING SERIES

FRENCH—
ENGINEERING DRAWING
Fourth Edition
466 pages, 6 × 9, 733 illustrations

FRENCH AND TURNBULL—
LESSONS IN LETTERING
BOOK I—Vertical Lettering
40 pages, 9 × 6
BOOK II—Inclined Lettering
40 pages, 9 × 6

FRENCH AND SVENSEN—
MECHANICAL DRAWING FOR HIGH SCHOOLS
SECOND EDITION
242 pages, 6 × 9, 495 illustrations

FRENCH AND IVES—
AGRICULTURAL DRAWING AND THE DESIGN OF FARM STRUCTURES
130 pages, 7½ × 10, 182 illustrations

FRENCH AND MEIKLEJOHN—
ESSENTIALS OF LETTERING
94 pages, oblong, 9 × 6, 120 illustrations

A MANUAL

OF

ENGINEERING DRAWING

FOR

STUDENTS AND DRAFTSMEN

BY

THOMAS E. FRENCH, M.E., D.Sc.

Professor of Engineering Drawing The Ohio State University
Member American Society of Mechanical Engineers
Society for the Promotion of Engineering
Education. Etc.

FOURTH EDITION
REVISED AND ENLARGED
EIGHTH IMPRESSION

McGRAW-HILL BOOK COMPANY, INC.
NEW YORK AND LONDON
1929

COPYRIGHTED, 1911, 1918, 1924, 1929, BY THE
McGRAW-HILL BOOK COMPANY, INC.

FIRST EDITION
First Printing, August, 1911.

SECOND EDITION
First Printing, July, 1918

THIRD EDITION
First Printing, May, 1924.

FOURTH EDITION
First Printing, June, 1929.
Second Printing, August, 1929.
Third Printing, October, 1929.
Fourth Printing, January, 1930.
Fifth Printing, September, 1930.
Sixth Printing, May, 1931.
Seventh Printing, September, 1932.
Eighth Printing, March, 1934.
TOTAL ISSUE, 328,500

PRINTED IN THE UNITED STATES OF AMERICA

THE MAPLE PRESS COMPANY, YORK, PA.

PREFACE TO FOURTH EDITION

The work that has been done by the American Standards Association (formerly the American Engineering Standards Committee) since the last edition of this book was printed has made it desirable to revise it to conform to the new standards established, and to add in tabular form such of them as are pertinent to the subject matter of the book. The Association, sponsored by three hundred national organizations, has completed many standardization projects and has many more under way. Among those which have to do with drawing are new standards, adopted or proposed, for screw threads, for bolts and nuts, for cap screws, set screws etc., for screwed and flanged pipe fittings, for keys, for rivets, for tapers, for various symbols, for wire and sheet metal gages, for drafting room practice, etc.

The revision has given the opportunity for expanding some of the subjects in the text, such as auxiliary projections, dimensioning, gears, etc., and adding new illustrations and problems. Included in the elementary problems will be found a set of figures for accurate tangent drawing and new figures in the orthographic and isometric groups. The number of working drawing problems has been increased from 76 to 120, including new automotive, aeronautical and other machine parts, together with 30 electrical problems.

The author is again indebted to his friends in the drawing profession for comment and suggestion, to the members of his own department, notably Mr. Paffenbarger and Mr. Cooper, for their interest and help, and most of all to his associate, Mr. Russ, for his valuable and cheerful cooperation.

THOMAS E. FRENCH.

COLUMBUS, OHIO.
May, 1929.

PREFACE TO THIRD EDITION

In the time that has passed since the Preface to the first edition of this book was written there has been considerable advance in the methods of teaching the graphic language, and the first paragraph of that preface would not be so written today, as there is now probably no greater lack of uniformity in different schools than there is in other subjects such as physics and chemistry.

A course in drawing consists essentially of a series of problems given in connection with assigned study of the text, and aside from the personality of the teacher the greatest factor in the success of a course lies in the selection, arrangement and method of presentation of these problems.

In this revision the plan of the book as originally conceived has not been changed. It is a text-book with a collection of tested problems, grouped and graded, and following current engineering practice. Many new problems have been added, as well as new matter in text and appendix. The importance of Dimensioning is emphasized by a separate chapter preceding Working Drawings, and in response to numerous requests a chapter on Perspective has replaced the former note on that subject. The growing use of graphical charts in engineering and business gives a reason (already recognized by Dean Anthony) for a chapter on Charts, Graphs and Diagrams, with problems. Mr. L. F. Headley's contribution to this chapter, Mr. G. E. Large's to the perspective chapter and Mr. John M. Russ's to the working drawing problems should be acknowledged.

The author's thanks are due to the drawing teachers of the country, many of whom are his personal friends, not only for valuable suggestions, but more than that for their expressions of confidence in the book and its mission.

Columbus, Ohio,
April, 1924.

PREFACE TO SECOND EDITION

The use of this book under varying conditions by over two hundred technical schools has made it possible to obtain a certain amount of constructive criticism. A symposium of this criticism, based on the working use of the book has indicated the desirability of an adequate lettering chapter, and a more extended treatment of working drawings. Numerous other changes and additions thought desirable, have been made.

The important changes and additions are: the new chapter on lettering of twenty-two pages and forty-five illustrations, designed to give a thorough course for engineers, with detailed analysis of the letter forms and discussions of composition of letters and words, and with a carefully graded series of exercises; a separate chapter on screw threads, bolts and fastenings; a rewritten and greatly enlarged chapter on working drawings, with sixty carefully graded problems; a new chapter on structural drawing; an extension of the scope of the chapter on architectural drawing; the addition of new problems in each chapter, with the old ones used redrawn to larger size, and the addition of an appendix containing useful tables and diagrams.

The book as enlarged is adapted for advanced courses in machine drawing, and the group arrangement provides an adequate series of problems for either long or short courses.

Current engineering and drafting room practice is illustrated in the figures and problems, most of which have been adapted from the industries. There is also rather full consideration of the practical modifications of theory when applied to commercial work, with suggested treatments of many cases which are often perplexing to draftsmen.

The author expresses his appreciation of the assistance of his colleagues, Professor Meiklejohn and Mr. W. B. Field, and especially of the able collaboration of Professor Carl L. Svensen, without whose aid the revision at this time would not have been possible.

COLUMBUS, OHIO,
June 15, 1918.

PREFACE TO FIRST EDITION

There is a wide diversity of method in the teaching of engineering drawing, and perhaps less uniformity in the courses in different schools than would be found in most subjects taught in technical schools and colleges. In some well-known instances the attempt is made to teach the subject by giving a series of plates to be copied by the student. Some give all the time to laboratory work, others depend principally upon recitations and home work. Some begin immediately on the theory of descriptive geometry, working in all the angles, others discard theory and commence with a course in machine detailing. Some advocate the extensive use of models, some condemn their use entirely.

Different courses have been designed for different purposes, and criticism is not intended, but it would seem that better unity of method might result if there were a better recognition of the conception that drawing is a real language, to be studied and taught in the same way as any other language. With this conception it may be seen that except for the practice in the handling and use of instruments, and for showing certain standards of execution, copying drawings does little more in the study as an art of expression of thought than copying paragraphs from a foreign book would do in beginning the study of a foreign language.

And it would appear equally true that good pedagogy would not advise taking up composition in a new language before the simple structure of the sentence is understood and appreciated; that is, "working drawings" would not be considered until after the theory of projection has been explained.

After a knowledge of the technic of expression, the "penmanship and orthography," the whole energy should be directed toward training in constructive imagination, the perceptive ability which enables one to think in three dimensions, to visualize quickly and accurately, to build up a clear mental image, a requirement absolutely necessary for the designer who is to represent his thoughts on paper. That this may be accomplished

more readily by taking up solids before points and lines has been demonstrated beyond dispute.

It is then upon this plan, regarding drawing as a language, the universal graphical language of the industrial world, with its varied forms of expression, its grammar and its styles, that this book has been built. It is not a "course in drawing," but a text-book, with exercises and problems in some variety from which selections may be made.

Machine parts furnish the best illustrations of principles, and have been used freely, but the book is intended for all engineering students. Chapters on architectural drawing and map drawing have been added, as in the interrelation of the professions every engineer should be able to read and work from such drawings.

In teaching the subject, part of the time, at least one hour per week, may profitably be scheduled for class lectures, recitations, and blackboard work, at which time there may be distributed "study sheets" or home plates, of problems on the assigned lesson, to be drawn in pencil and returned at the next corresponding period. In the drawing-room period, specifications for plates, to be approved in pencil and some finished by inking or tracing, should be assigned, all to be done under the careful supervision of the instructor.

The judicious use of models is of great aid, both in technical sketching and, particularly, in drawing to scale, in aiding the student to feel the sense of proportion between the drawing and the structure, so that in reading a drawing he may have the ability to visualize not only the shape, but the size of the object represented.

In beginning drawing it is not advisable to use large plates. One set of commercial drafting-room sizes is based on the division of a $36'' \times 48''$ sheet into $24'' \times 36''$, $18'' \times 24''$, $12'' \times 18''$ and $9'' \times 12''$. The size $12'' \times 18''$ is sufficiently large for first year work, while $9'' \times 12''$ is not too small for earlier plates.

Grateful acknowledgment is made of the assistance of Messrs. Robert Meiklejohn, O. E. Williams, A. C. Harper, Cree Sheets, F. W. Ives, W. D. Turnbull, and W. J. Norris of the staff of the Department of Engineering Drawing, Ohio State University, not only in the preparation of the drawings, but in advice and suggestion on the text. Other members of the faculty of this University have aided by helpful criticism.

The aim has been to conform to modern engineering practice, and it is hoped that the practical consideration of the draftsman's needs will give the book permanent value as a reference book in the student's library.

The author will be glad to co-operate with teachers using it as a text-book.

COLUMBUS, OHIO,
June 6, 1911.

CONTENTS

Page

PREFACE TO FOURTH EDITION v

PREFACE TO THIRD EDITION vi

PREFACE TO SECOND EDITION vii

PREFACE TO FIRST EDITION viii

CHAPTER I.—INTRODUCTORY 1
Engineering drawing as a language—Its division into mechanical drawing and technical sketching—Requirements in its study.

CHAPTER II.—THE SELECTION OF INSTRUMENTS 3
Quality—List of instruments and materials for line drawing—The case instruments—The pivot joint—Points to observe in selecting instruments—Compasses—Dividers—Ruling pens—Bow instruments—Drawing boards—T-squares—Triangles—Scales—Pencils—Inks—Curves—Drawing papers.

CHAPTER III.—THE USE OF INSTRUMENTS 13
Good form in drawing—Accuracy—Preparation for drawing—The pencil—The T-square—Laying out the sheet—Use of triangles—Use of dividers—To divide a line by trial—Use of the compasses—Use of the scale—Inking—Tangent lines and arcs—Faulty lines—The alphabet of lines—Use of the French curve—Exercises—A page of cautions.

CHAPTER IV.—LETTERING 34
Importance—Divisions—General proportions—The rule of stability—Single stroke lettering—Lettering pens—Materials—Methods of spacing—Position of the pen—Single stroke vertical capitals—Order and direction of strokes—The I H T group—The L E F group—The N Z X Y group—The V A K group—The M W group—The O Q C G group—The D U J group—The P R B group—The S 8 3 group—The 0 6 9 group—The 2 5 7 & group—The fraction group—Vertical lower case—Single stroke inclined capitals—Single stroke inclined lower case—The loop letters—The hook letters—Compressed and extended letters—Composition and spacing—Caps and small caps—Titles, contents, forms, position, size—To draw a title, center line method, the scratch paper methods, the proportional method—Outlined commercial gothic—The Roman letter—Rule for shading—Old Roman—Architects' single

PAGE

stroke—Modern Roman, construction, extended and compressed—Inclined Roman and stump letters—Exercises in lettering, composition and titles.

CHAPTER V.—APPLIED GEOMETRY. 60
Applications of the principles of geometry in mechanical drawing—To divide a line, geometrical method, scale method—To construct a triangle—To transfer a polygon to a new base—To construct a hexagon—A pentagon—An octagon—To construct a polygon, one side given—To draw a circular arc through three points—Tangents—To draw a tangent to a circle—To draw an arc tangent to two lines—To draw a circle tangent to a circle and a line—To draw a circle tangent to two circles—To draw an ogee curve—To rectify an arc—To lay off on an arc the length of a straight line—The conic sections—The ellipse—Pin and string method, trammel method, parallelogram method, conjugate axes, concentric circle method, To draw a tangent, To draw a tangent parallel to a given line, To draw a tangent from a point outside—Approximate ellipses, four centered, eight centered—The parabola—Parallelogram method, offset method, parabolic envelope—The hyperbola—The equilateral hyperbola—Cycloidal curves—Involutes—The spiral of Archimedes—Problems.

CHAPTER VI.—THE THEORY OF PROJECTION DRAWING 81
The theory defined—Orthographic projection—One plane methods, axonometric, oblique—Tabular classification.

CHAPTER VII.—ORTHOGRAPHIC PROJECTION. 85
Definition—The planes of projection—Principles—Drawing in orthographic projection—Dotted lines—Reading a drawing—Auxiliary views—Revolution—The true length of a line—Sectional views, principles, half-sections, revolved sections, detail sections, phantom sections, section lining—First angle projection—Problems, in eight groups.

CHAPTER VIII.—PICTORIAL REPRESENTATION. 122
The use of conventional pictorial methods, their advantages, disadvantages and limitations—Divisions—Axonometric projection—Isometric projection—Isometric drawing—To make an isometric drawing—The boxing method—The offset method—Isometric circles—Reversed axes—Isometric sections—Dimetric drawing—Trimetric drawing—Oblique projection—To make an oblique drawing—Cabinet drawing—Other forms—Clinographic projection and its use in crystallography—Sketching—Problems, in six groups.

CHAPTER IX.—DEVELOPED SURFACES AND INTERSECTIONS. . . . 148
Classification of surfaces—Developments—To develop a hexagonal prism—The cylinder—The hexagonal pyramid—The rectangular pyramid—The truncated-right cone—Triangulation—The oblique

PAGE

cone—Transition pieces—The sphere—The intersection of surfaces—Applications—Two prisms—Two cylinders—Prism and cone—Prism and sphere—Cylinder and cone—Plane and surface of revolution—Problems, in thirteen groups.

CHAPTER X.—DIMENSIONING 171
Principles—Lines and symbols—Theory of dimensioning—Size dimensions—Location dimensions—Placing dimensions—Rules for dimensioning—Base line dimensioning—Limits and fits—Tolerances—Dimensions for the pattern shop—Dimensions for the forge shop—Dimensions for the machine shop—Dimensions for the assembly shop—Dimensions for the purchaser—The metric system—Notes and specifications—Dimensioning pictorial drawings—Problems in dimensioning.

CHAPTER XI.—BOLTS, SCREWS, KEYS, RIVETS AND PIPE 188
Fastenings—The helix—To draw a helix—Forms of threads—To draw a screw thread—Conventional threads—American Standard screw threads—Classification of fits—Identification symbols—Extra fine screw thread series—American Standard bolts and nuts—To draw a bolt—U. S. Standard—Studs—Locknuts—Cap screws—Machine screws—Set screws—Wood screws—Dimensioning and specifying bolts and screws—Keys—Rivets and riveted joints—Helical springs—Pipe—Pipe fittings—Valves—Pipe drawings—Problems, in four groups.

CHAPTER XII.—WORKING DRAWINGS 214
Description—Choice of views—Classes of working drawings—Assembly drawings—Detail drawings—Style in drawing—Making a working drawing—Order of penciling—Tracing—Order of inking—Sections—Violations of theory—Sectional violations—Full view violations—Fillets and rounds—Conventional symbols—Codes—Conventional breaks—Gears—To draw a spur gear—To draw a rack—To draw a bevel gear—Cams—Checking a drawing—Bill of material—Title—Contents of title—Commercial practice—The drawings and the shop—The pattern shop—The foundry—The forge shop—The tool designing department—The machine shop—The assembly shop—The inspection department—Arc welding—Chemical drawing—Electrical drawing—Problems, in fifteen groups.

CHAPTER XIII.—TECHNICAL SKETCHING 296
Purpose—Necessity to the engineer—Practice—Materials—Technique—Making a sketch—Dimensioning—Measuring—Cross-section paper—Kinds of technical sketches—Sketching by pictorial methods, axonometric, oblique, perspecitve—Sketching from memory—Problems, in three groups.

CHAPTER XIV.—PERSPECTIVE DRAWING 309
Definition—Elementary concepts of perspective—Classes of

PAGE

perspective drawings—To make an angular perspective drawing—The cone of rays—Vertical measurements—Parallel perspective—To make a parallel perspective drawing—The revolved plan method—Measuring points—Perspective plan method—Inclined lines—Circles in perspective.

CHAPTER XV.—THE ELEMENTS OF ARCHITECTURAL DRAWING . . 321
Characteristics of architectural drawing—Kinds of drawings—Preliminary sketching—Display drawings—Rendering—Models—Working drawings—Plans—Drawing a plan—Elevations—Drawing an elevation—Sections—Detail drawings—Details of building construction—Symbols—Dimensioning—Notes and specifications—Checking—Lettering—Titles—Problems.

CHAPTER XVI.—THE ELEMENTS OF STRUCTURAL DRAWING . . . 345
Functions of structural drawing—Classification—General drawings—Detail drawings—Structural drawing practice—Dimensioning—Checking—Rivets—Osborn symbols—Erection marks—Timber structures—Masonry structures—Reinforced concrete—Methods of drawing.

CHAPTER XVII.—MAP AND TOPOGRAPHICAL DRAWING 358
Classification of maps—Plats—Plat of a survey—Railroad property map—Plats of subdivisions—City plats—Topographical drawing, contours, hill shading, waterlining—Topographic symbols, culture, relief, water features, vegetation—Common faults—Government maps—Landscape maps—Lettering—Titles—Profiles.

CHAPTER XVIII.—CHARTS, GRAPHS AND DIAGRAMS. 377
Uses—Classification—Rectilinear charts—Titles and notation—Logarithmic charts—Semi-logarithmic charts—Misleading charts—Polar charts—Trilinear charts—Alignment charts—Classification charts, route charts and flow sheets—Popular chart—Bar charts, one-hundred-percent-bars, simple bar charts, compound bar charts—Pie diagrams—Area and volume diagrams—To draw a chart—Standards for graphic presentations—Charts for reproduction—Charts for display—Problems.

HAPTER XIX.—DUPLICATION AND DRAWING FOR REPRODUCTION 395
Tracing cloth—Tracing—Blue printing—Formula—To make a blue print—Intensifying—Blue print machines—Changes on prints—Transparentizing—Ozalid process—Other printing processes, Van Dyke, photostat—Duplicating tracings—Drawing for reproduction—Zinc etching—Halftones—Retouching—Ben Day films—Wax process—Lithography.

CHAPTER XX.—SHADE LINES AND LINE SHADING. 405
Shade lines, purpose and uses—Applications—Line shading, theory, practice—Patent Office drawings, requirements, rules, methods of making.

Page

CHAPTER XXI.—Notes on Commercial Practice 415
Note book suggestions—To sharpen a pen—Stretching paper—Tinting—Colors—Mounting tracing paper—Mounting on cloth, hot mounting, cold mounting—Methods of copying drawings, pricking, transfer by rubbing, glass drawing board—Proportional methods, the pantograph, proportional dividers, proportional squares—Preserving drawings—Special instruments, drop pen, ellipsograph, special pens, protractors, the Universal Drafting machine—Curves—Various devices.

CHAPTER XXII.—Bibliography of Allied Subjects. 430
A short classified list of books on allied subjects—Architectural drawing—Cams—Charts, Graphs and Diagrams—Descriptive Geometry—Gears and gearing—Handbooks—Lettering—Machine Design—Mechanism and kinematics—Perspective—Piping—Rendering—Shades and shadows—Sheet metal drafting—Shop practice—Structural drawing and design—Topographical drawing.

Appendix 437
Tapers—Taper pins—Cap screws—Machine screws—Standard pipe—Am. St'd. cast iron fittings—Am. St'd. malleable fittings—Am. St'd. flanged fittings—Am. St'd. square and flat keys—Am. St'd. gib head keys—St'd. Woodruff keys—St'd. beam connections—Wire and sheet metal gages—Decimal equivalents—Metric equivalents—Electrical symbols—Radio symbols—Wiring symbols—Symbols for materials—Abbreviations—Symbols for colors—Commercial sizes—Glossary of shop terms—Glossary of structural terms.

Index. 457

ENGINEERING DRAWING

CHAPTER I

Introductory

1. By the term Engineering Drawing is meant drawing as used in the industrial world by engineers and designers, as the language in which is expressed and recorded the ideas and information necessary for the building of machines and structures; as distinguished from drawing as a fine art, as practiced by artists in pictorial representation.

The artist strives to produce, either from the model or landscape before him, or through his creative imagination, a picture which will impart to the observer something as nearly as may be of the same mental impression as that produced by the object itself, or as that in the artist's mind. As there are no lines in nature, if he is limited in his medium to lines instead of color and light and shade, he is able only to suggest his meaning, and must depend upon the observer's imagination to supply the lack.

The engineering draftsman has a greater task. Limited to outline alone, he may not simply suggest his meaning, but must give exact and positive information regarding every detail of the machine or structure existing in his imagination. Thus drawing to him is more than pictorial representation; it is a complete graphical language, by whose aid he may describe minutely every operation necessary, and may keep a complete record of the work for duplication or repairs.

In the artist's case the result can be understood, in greater or less degree, by any one. The draftsman's result does not show the object as it would appear to the eye when finished, consequently his drawing can be read and understood only by one trained in the language.

Thus as the foundation upon which all designing is based, engineering drawing becomes, with perhaps the exception of mathematics, the most important single branch of study in a technical school.

2. When this language is written exactly and accurately, it is done with the aid of mathematical instruments, and is called **mechanical drawing.**[1] When done with the unaided hand, without the assistance of instruments or appliances, it is known as freehand drawing, or **technical sketching.** Training in both these methods is necessary for the engineer, the first to develop accuracy of measurement and manual dexterity, the second to train in comprehensive observation, and to give control and mastery of form and proportion.

Our object then is to study this language so that we may write it, express ourselves clearly to one familiar with it, and may read it readily when written by another. To do this we must know the alphabet, the grammar and the composition, and be familiar with the idioms, the accepted conventions and the abbreviations.

This new language is entirely a graphical or written one. It cannot be read aloud, but is interpreted by forming a mental picture of the subject represented; and the student's success in it will be indicated not alone by his skill in execution, but by his ability to interpret his impressions, to visualize clearly in space.

It is not a language to be learned only by a comparatively few draftsmen, who will be professional writers of it, but should be understood by all connected with or interested in technical industries, and the training its study gives in quick, accurate observation, and the power of reading description from lines, is of a value quite unappreciated by those not familiar with it.

In this study we must first of all become familiar with the technique of expression, and as instruments are used for accurate work, the first requirement is the ability to use these instruments correctly. With continued practice will come a facility in their use which will free the mind from any thought of the means of expression. Under technique is included the study of lettering, usually the first work taken up in a technical course.

[1] The term "Mechanical Drawing" is often applied to all constructive graphics, and, although an unfortunate misnomer, has the sanction of long usage. The whole subject of graphic representation of solids on reference planes comes under the general name of *descriptive geometry.* That term, however, has by common acceptance been restricted to a somewhat more theoretical treatment of the subject as a branch of mathematics. This book may be considered as an ample preparation for that fascinating subject, with whose aid many difficult problems may be solved graphically.

CHAPTER II

The Selection of Instruments

3. In the selection of instruments and material for drawing the only general advice that can be given is to secure the *best* that can be afforded. For one who expects to do work of professional grade it is a great mistake to buy inferior instruments. Sometimes a beginner is tempted by the suggestion to get cheap instruments for learning, with the expectation of getting better ones later. With reasonable care a set of good instruments will last a lifetime, while poor ones will be an annoyance from the start, and will be worthless after short usage. As good and poor instruments look so much alike that an amateur is unable to distinguish them, it is well to have the advice of a competent judge, or to buy only from a trustworthy and experienced dealer.

This chapter will be devoted to a short description of the instruments usually necessary for drawing. Mention of some not in everyday use, but which are of convenience for special work will be found in Chapter XXI. In this connection, valuable suggestions may be found in the catalogues of the large instrument houses, notably Theo. Alteneder & Sons, Philadelphia; the Keuffel & Esser Co., New York, and the Eugene Dietzgen Co., Chicago.

The following list includes the necessary instruments and materials for ordinary line drawing. The items are numbered for convenience in reference and assignment.

4. List of Instruments and Materials.

1. Set of drawing instruments, in morocco case, including at least: 6″ compasses, with fixed needle-point leg, pencil, pen and lengthening bar; 6″ hair-spring dividers; two ruling pens; three bow instruments; box of hard leads.
2. Drawing board.
3. T-square.
4. 45° and 30°–60° triangles.
5. 12″ mechanical engineer's scale of proportional feet and inches (three flat or one triangular).
6. One dozen thumb tacks.
7. Drawing pencils, 6 H, 2 H and F.
8. Pencil pointer.
9. Pencil eraser.
10. Bottle of drawing ink.
11. Penholder, pens for lettering, and penwiper.
12. French curves.

13. Drawing paper, to suit.
14. Tracing paper.

To these may be added:

15. Art gum or cleaning rubber.
16. Dusting cloth.
17. Bottle holder.
18. Erasing shield.
19. Lettering triangle.
20. Protractor.
21. 2′ or 4′ rule.
22. Sketch book.
23 Hard Arkansas oil stone.
24. Piece of soapstone.
25. Sharp pocket knife (for sharpening pencils).

The student should mark all his instruments and materials plainly with initials or name, as soon as purchased and approved.

The Case Instruments.—(1) All modern high-grade instruments are made with some form of "pivot joint," originally patented by Theodore Alteneder in 1850 and again in 1871. Before this time, and by other makers during the life of the patent, the heads of compasses and dividers were made with tongue joints, as illustrated in Fig. 1, and many of these old instruments are still in existence.

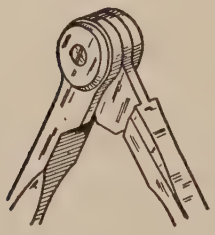

Fig. 1.—Tongue joint.

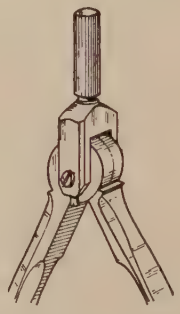

Fig. 2.—Pivot joint (Alteneder).

A modified form of this pin joint is still used for some of the cheap grades of instruments. The objection which led to the abandonment of this form was that the wear of the tongue on the pin gave a lost motion, which may be detected by holding a leg in each hand and moving them slowly back and forth. This jump or lost motion after a time increases to such an extent as to render the instrument unfit for use. The pivot joint, Fig. 2, overcomes this objection by putting the wear on the conical points instead of the through pin. Since the expiration of the patent all instrument makers have adopted this type of head, and several modifications of the original have been introduced. Sectional views of some different pivot joints are shown in Fig. 3.

The handle attached to the yoke, while not essential to the working of the joint, is of great convenience. Not all instruments with handles, however, are pivot-joint instruments. Several straightener devices for keeping the handle erect have

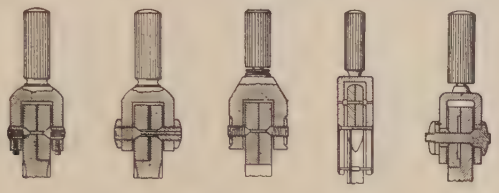

FIG. 3.—Sections of pivot joints.

been devised, but by many draftsmen they are not regarded with favor.

There are three different patterns or shapes in which modern compasses are made; the beveled or American *A*, the round *B*,

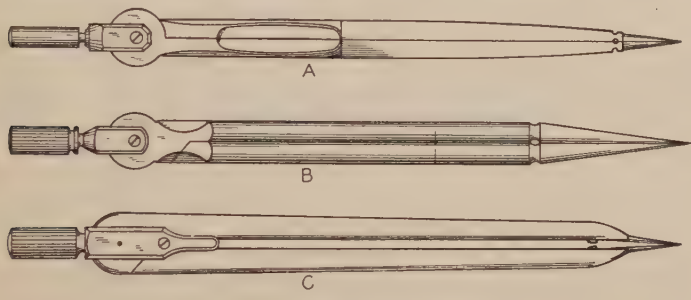

FIG. 4.—The three patterns.

and the flat *C*, Fig. 4. The choice of shapes is entirely a matter of personal preference. After one has become accustomed to the balance and feel of a certain instrument he will not wish to exchange it for another shape.

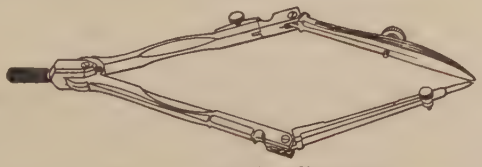

FIG. 5.—Test for alignment.

Compasses may be tested for accuracy by bending the knuckle joints and bringing the points together as illustrated in Fig. 5. If out of alignment they should not be accepted. The standard compasses are six inches long, but a favorite additional instru-

ment with draftsmen is the four inch size with fixed pencil leg and its companion with fixed pen leg.

Dividers are made either "plain," as those in Fig. 4, or "hair-spring," as shown in Fig. 6. The latter form, which has one leg with screw adjustment, is occasionally of convenience

Fig. 6.—Hairspring dividers.

and should be preferred. Compasses may be had also with hairspring attachment on the needle-point leg.

Ruling pens are made in a variety of forms, Fig. 7. The two most popular ones are the spring blade *A* which opens sufficiently wide to allow of cleaning, and the jack-knife *E* which

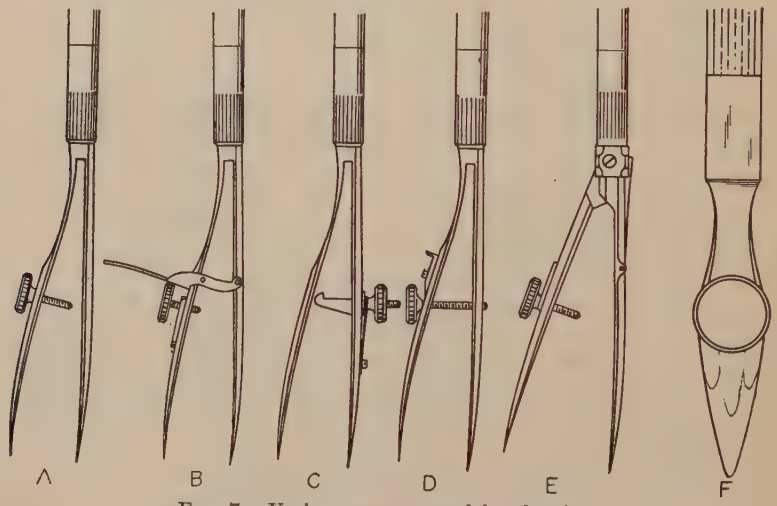

Fig. 7.—Various pens, opened for cleaning.

may be cleaned without changing the setting. The form shown at *F* is known as a detail pen or Swede pen, which for large work is a very desirable instrument. Pens should have ebony or aluminum handles, not ivory nor bone, which breaks easily. The nibs of the pen should be shaped as shown in Fig. 699. Cheap pens often come from the factory poorly sharpened, and must be dressed, as described on page 415, before they can be used.

The set of three spring bow instruments includes bow points or spacers, bow pencil and bow pen. There are several designs

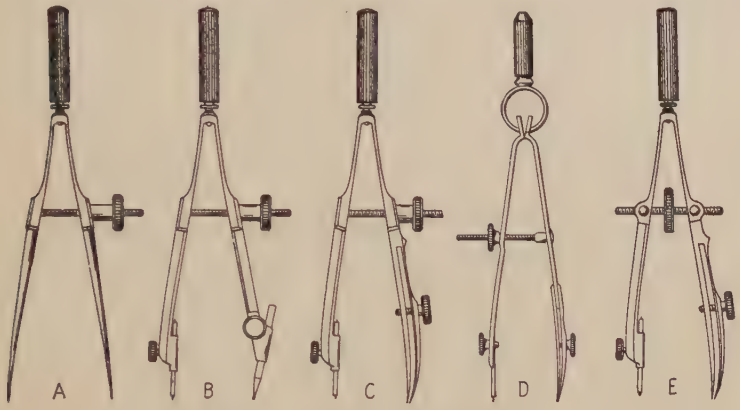

FIG. 8.—Spring bow instruments.

and sizes. The standard shapes of side-screw bow instruments are shown in Fig. 8, *A*, *B*, *C*. At *D* is illustrated the hook or ring spring type, sometimes called "Richter" bows. Both

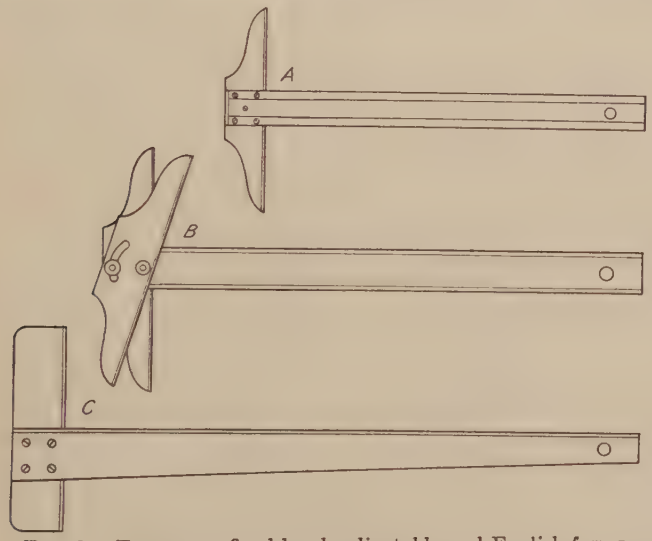

FIG. 9.—T-squares: fixed head, adjustable and English forms.

standard and Richter types are made as side-screw bows and also as center-screw instruments, illustrated by the center-screw bow pen at *E*, which are becoming increasingly popular among drafts-

men. The springs of the side-screw bows should be strong enough to open to the full length of the screw but not so stiff as to be difficult to pinch together. The hook spring bow usually has a softer spring than the flat spring type.

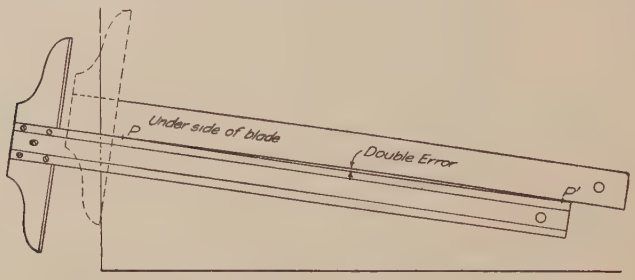

Fig. 10.—To test a T-square.

2. **Drawing boards** are made of clear white pine (basswood has been used as a substitute) cleated to prevent warping. Care should be taken in their selection, and the working edge tested with a steel straight-edge.

3. **The T-square** with fixed head, Fig. 9*A*, is used for all ordinary work. It should be of hard wood and the blade perfectly straight. The transparent edge blade is much the best. A draftsman will have several fixed head squares of different lengths, and will find an adjustable head square *B* of occasional use. The form shown at *C* is the English type with tapered blade and beveled edge. In a long square it has an advantage in balance and rigidity, but has the objection that the lower edge is apt to disturb the eyes' sense of perpendicularity. A T-square blade may be tested for straightness by drawing a sharp line through two points, then turning it over and with the same edge drawing another line through the points, as shown in Fig. 10.

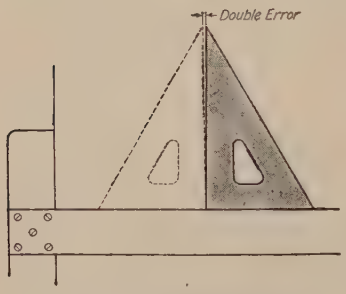

Fig. 11.—To test a triangle.

4. Triangles made of transparent celluloid (fiberloid) are much to be preferred over wooden ones, although they have a tendency to warp, and their accuracy should be tested periodically by drawing perpendicular lines as shown in Fig. 11. For ordinary

work a 6″ or 8″—45 degree and a 10″—60 degree are good sizes. A small triangle of 67½ to 70 degrees will be of value for drawing guide lines in slant lettering.

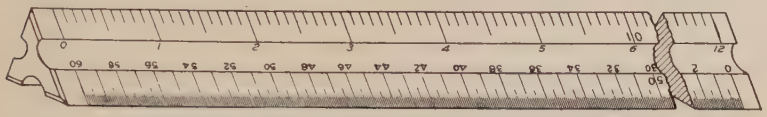

Fig. 12.—Civil engineers' scale.

5. **Scales.**—There are two kinds of modern scales, the civil engineers' scale of decimal parts, Fig. 12, and the mechanical engineers' (or architects') scale of proportional feet and inches, Fig. 13. The former is used for plotting and map drawing, and

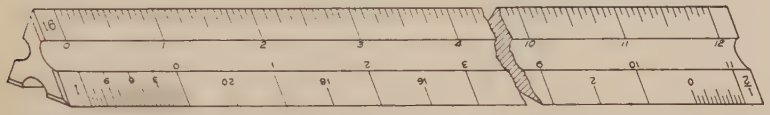

Fig. 13.—Mechanical engineers' or architects' scale.

in the graphic solution of problems, the latter for all machine and structural drawings. Scales are usually made of boxwood, sometimes of metal or paper, and of shapes shown in section in Fig. 14. The triangular form either *A* or *B* is the commonest. Its only advantage is that it has more scales on one stick than the others, but this is offset by the delay in finding the scale wanted. Flat scales are much more convenient, and should be chosen on this account. Three flat scales are the equivalent of one triangular scale. The "opposite bevel" scale *E* is easier to pick up than the regular form *D*. Many professional draftsmen use a set of six or eight scales, each graduated in one division only. A very popular scale among machine draftsmen at the present time is the new opposite bevel "full-

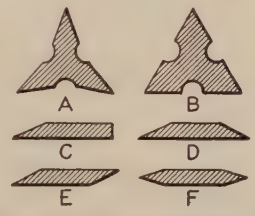

Fig. 14.—Sections of scales.

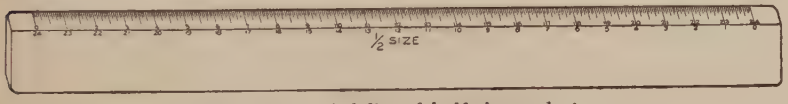

Fig. 15.—A full-and half-size scale.

divided" flat scale, one with full size on one edge and half size on the other, Fig. 15, and a second with quarter size and eighth size.

6. The best **thumb tacks** are made with a thin head and steel point screwed into it, and cost as high as seventy-five cents a dozen. The ordinary stamped tacks at thirty cents a hundred answer every purpose. Tacks with comparatively short tapering pins should be chosen.

7. **Drawing pencils** are graded by letters from 6B (very soft and black) 5B, 4B, 3B, 2B, B, HB, F, H, 2H, 3H, 4H, 5H, 6H, to 9H (extremely hard). For line work 6H is generally used. A softer pencil (2H) should be used for lettering, sketching and penciling not to be inked. Some prefer a holder known as an "artist's pencil," using standard size lead fillers.

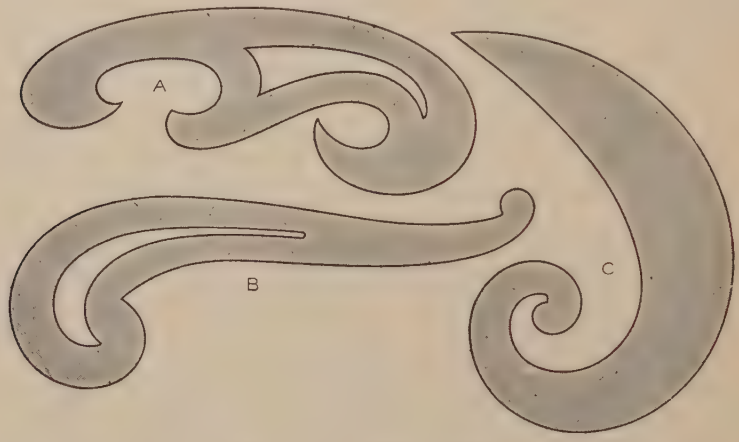

Fig. 16.—Irregular curves.

8. A sandpaper **pencil pointer** or flat file should always be at hand for sharpening pencils and compass leads.

9. The ruby **pencil eraser** is the favorite at present. One of large size, with beveled end is preferred. This eraser is much better for ink than a so-called ink eraser, as it will remove the ink perfectly without destroying the surface of the paper or cloth. A piece of art gum or soft rubber is useful for cleaning paper.

10. **Drawing ink** is finely ground carbon in suspension, with shellac added to render it waterproof. The non-waterproof ink flows more freely, but smudges very easily.

Formerly all good drawings were made with stick ink, rubbed up for use with water in a slate slab, and for very fine line work this is still preferred as being superior to liquid ink, although the principal use for stick ink now is in making wash drawings.

11. The **penholder** should have a cork grip small enough to enter the mouth of the ink bottle. An assortment of pens for lettering, grading from coarse to fine, may be chosen from those listed in Chapter IV. A *penwiper* of lintless cloth or thin chamois skin should always be at hand for both writing and ruling pens.

12. **Curves.**—Curved rulers, called irregular curves, or French curves, are used for curved lines other than circle arcs. Celluloid is the only material to be considered. The patterns for these curves are laid out in parts of ellipses and spirals or other mathematical curves in combinations which will give the closest approximation to curves likely to be met with in practice. For the student, one ellipse curve, of the general shape of Fig. 16*A* or *B*, and one spiral, either a log. spiral *C*, or one similar to the one used in Fig. 41, will be sufficient. The curve of the logarithmic spiral is a closer approximation to the cycloid and other mathematical curves than any other simple curve.

13. **Drawing paper** is made in a variety of qualities, white for finished drawings and cream or buff tint for detail drawings. It may be had either in sheets or rolls. In general, paper should have sufficient grain or "tooth" to take the pencil, be agreeable to the eye, and have good erasing qualities. Good paper should hold a surface upon which a clean-cut inked line can be drawn after several inked lines have been erased. Tracing cloth should stand the same test. For wash drawings Whatman's paper should be used, and for fine line work for reproduction Reynold's Bristol board. These are both English papers in sheets, whose sizes may be found listed in any dealer's catalogue. Whatman's is handmade paper in three finishes, H, C.P., and R, or hot pressed, cold pressed, and rough; the first for fine line drawings, the second for either ink or color, and the third for water-color sketches. The paper in the larger sheets is heavier than in the smaller sizes, hence it is better to buy large sheets and cut them up. Bristol board is a smooth paper, made in different thicknesses, 2-ply, 3-ply, 4-ply, etc., 3-ply is generally used. For working drawings the cream or buff detail papers are much easier on the eyes than are white papers. The cheap manila papers should be avoided. A few cents more per yard is well spent in the increased comfort gained from working on good paper. In buying in quantity it is cheaper to buy roll paper by the pound. For maps or other drawings which are to withstand hard usage, mounted papers, with cloth backings are used. Drawings to be

duplicated by blue printing are made on bond or ledger papers, or traced on tracing paper or tracing cloth. Tracing and duplicating processes are described in Chapter XIX.

The foregoing instruments and materials are all that are needed in ordinary practice, and are as a rule, with the exception of such supplies as paper, pencils, ink, erasers, etc., what a draftsman is expected to take with him into a commercial drafting room.

There are many other special instruments and devices not necessary in ordinary work, but with which the draftsman should be familiar, as they may be very convenient in some special cases, and are often found as part of a drafting-room equipment. Some are described in Chapter XXI.

CHAPTER III

The Use of Instruments

5. In beginning the use of drawing instruments particular attention should be paid to correct method in their handling. There are many instructions and cautions, whose reading may seem tiresome, and some of which may appear trivial, but the strict observance of all these details is really necessary, if one would become proficient in the art.

Facility will come with continued practice, but from the outset *good form* must be insisted upon. One might learn to write fairly, holding the pen between the fingers or gripped in the closed hand, but it would be poor form. It is just as bad to draw in poor form as to write in poor form. Bad form in drawing is distressingly common, and may be traced in every instance to lack of care or knowledge at the beginning, and the consequent formation of bad habits. These habits when once formed are most difficult to overcome.

All the mechanical drawing we do serves incidentally for practice in the use of instruments, but it is best for the beginner to learn the functions and become familiar with the handling and "feel" of each of his instruments by making two or three drawings designed for that purpose so that when real drawing problems are encountered the use of the instruments will be easy and natural, and there need be no distraction nor loss of time on account of correction for faulty manipulation.

These practice drawings may either be simply exercises such as those on pages 30 and 31, geometrical problems, or drawings of simple pieces, the object of them is the same—to give the student a degree of skill and assurance, so that he is not afraid of his instruments.

The two requirements are *accuracy* and *speed*, and in commercial work neither is worth much without the other. Accurate penciling is the first consideration. Inking should not be attempted until a certain proficiency in penciling has been attained. A good instructor will not accept a beginner's inked

drawing if it has the least inaccuracy, blot, blemish or indication of ink erasure. It is a mistaken kindness to the beginner to accept faulty or careless work. The standard set at this time will be carried through his professional life, and he should learn that a good drawing can be made just as quickly as a poor one. Erasing is expensive and mostly preventable, and the student allowed to continue in a careless way will grow to regard his eraser and jack-knife as the most important tools in his kit. The draftsman of course erases an occasional mistake and instructions in making corrections may be given later in the course, but these first sheets must not be erased.

6. Preparation for Drawing.—The drawing table should be set so that the light comes from the left, and adjusted to a convenient height for standing, that is, from 36 to 40 inches, with the

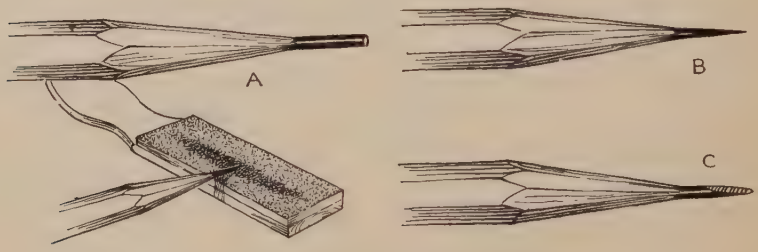

Fig. 17.—Sharpening the pencil.

board inclined at a slope of about 1 to 8. One may draw with more freedom standing than sitting. Wipe table and instruments with dust cloth before starting to draw.

7. The Pencil.—The pencil must be selected with reference to the kind of paper used. For line drawing on paper of good texture, a pencil as hard as 6H may be used, while on Bristol, for example, a softer one used with lighter touch would be preferred. In every case the pencil chosen must be hard enough not to blur or smudge. Sharpen it to a long conical point by removing the wood with the pen-knife as shown in Fig. 17*A* and sharpening the lead as at *B* by rubbing it on the sandpaper pad. A flat or wedge point *C* will not wear away in use as fast as a conical point, and on that account is preferred for straight line work by some draftsmen. By oscillating the pencil slightly while rubbing the lead on two opposite sides, an elliptical section is obtained. A softer pencil (H or 2H) should be at hand, sharpened to a long

conical point for sketching and lettering. Have the sandpaper pad within reach and keep the pencils sharp. A convenient way is to hang the pad on a cord attached to the table. When drawing long lines with a conical point rotate the pencil so as to keep the line sharp. Pencil lines should be made lightly, but sufficiently firm and sharp to be seen distinctly without eye strain, for inking and tracing. The beginner's usual mistake in using a hard pencil is to cut tracks in the paper. Dust off excess graphite from the pencil drawing occasionally. Too much emphasis cannot be given to the importance of clean, careful, accurate penciling. Never permit the thought that poor penciling may be corrected in inking.

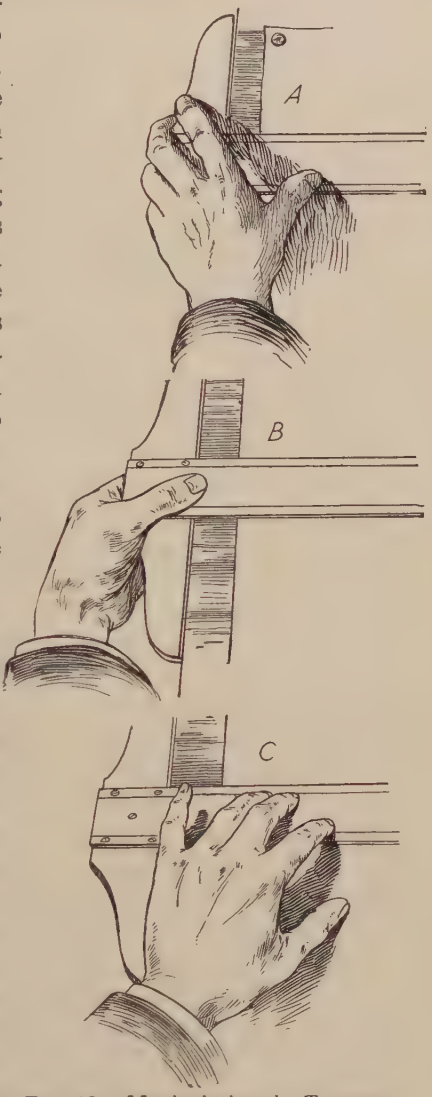

FIG. 18.—Manipulating the T-square.

8. The T-square.—The T-square is used only on the left edge of the drawing board (an exception to this is made in the case of a left-handed person, whose table should be arranged with the light coming from the right and the T-square used on the right edge).

Since the T-square blade is more rigid near the head than toward the outer end, the paper, if much smaller than the size of the board, should be placed close to the left edge of the board (within an inch or so) with its lower edge several inches from the bottom. With the T-square against the left edge of the board, square the top

of the paper approximately, hold in this position, slipping the T-square down from the edge, and put a thumb tack in each upper corner, pushing it in up to the head; move the T-square down over the paper to smooth out possible wrinkles and put thumb tacks in the other two corners.

The T-square is used manifestly for drawing parallel horizontal lines. These lines should always be drawn from left to right, consequently points for their location should be marked on the left side; vertical lines are drawn with the triangle set against the T-square; always with the perpendicular edge nearest the head of the square and toward the light. These lines are always drawn up from bottom to top, consequently their location points should be made at the bottom.

In drawing lines great care must be exercised in keeping them accurately parallel to the T-square or triangle, holding the pencil point lightly, but close against the edge, and not varying the angle during the progress of the line.

The T-square is manipulated by sliding the head along the left edge of the board with the fingers against the end of the head as shown at *A*, Fig. 18, making close adjustments with the thumb above and fingers touching the board as at *B*, or oftener with the fingers on the blade and the thumb on the board as shown in *C* of the same figure. In drawing vertical lines the T-square is held in position against the left edge of the board, the thumb on the blade, while the fingers of the left hand adjust the triangle, as illustrated in Fig. 19. One may be sure the T-square is in contact with the board by hearing the little double click as it comes against it.

9. Laying Out the Sheet.—The paper is usually cut somewhat larger than the desired size of the drawing, and is trimmed to size after the work is finished. Suppose the plate is to be $11'' \times 15''$ with a half-inch border. Lay the scale down on the paper close to the lower edge and measure 15″, marking the distance with the pencil, at the same time marking $\frac{1}{2}''$ inside at each end for the border line. Always use a short dash forming a continuation of the division on the scale in laying off a dimension. Do not make a dot, or bore a hole with the pencil. Near the left edge mark 11″ and $\frac{1}{2}''$ border line points. Through these four marks on the left edge draw horizontal lines with the T-square, and through the points on the lower edge draw vertical lines with the triangle against the T-square.

10. Use of Triangles.—We have seen that vertical lines are drawn with the triangle set against the T-square, Fig. 19.

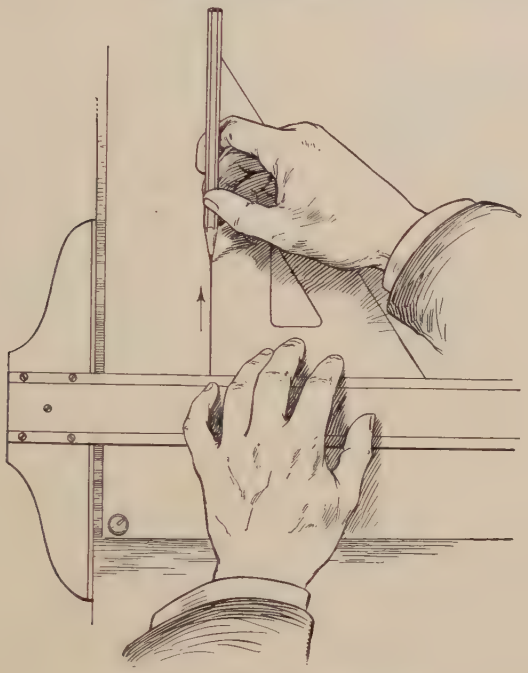

FIG. 19.—Drawing a vertical line.

Generally the 60-degree triangle is used, as it has the longer perpendicular. In both penciling and inking, the triangles should always be used in contact with a guiding straight-edge.

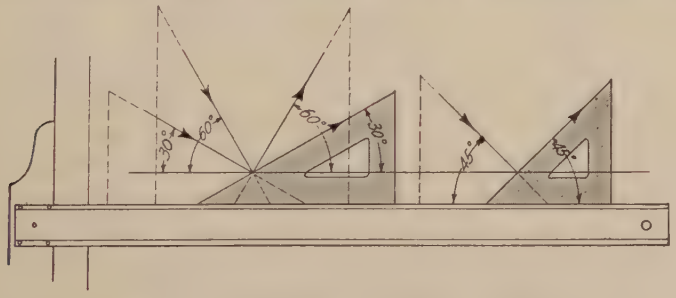

FIG. 20.—To draw angles of 30°, 45° and 60°.

To insure accuracy never work to the extreme corner of a triangle, but keep the T-square below the base line.

With the T-square against the edge of the board, lines at 30 degrees, 45 degrees and 60 degrees may be drawn as shown in Fig. 20, the arrows indicating the direction of motion. The two triangles may be used in combination for angles of 15, 75, 105 degrees, etc., Fig. 21. Thus any multiple of 15 degrees may be drawn directly, and a circle may be divided with the 45-degree

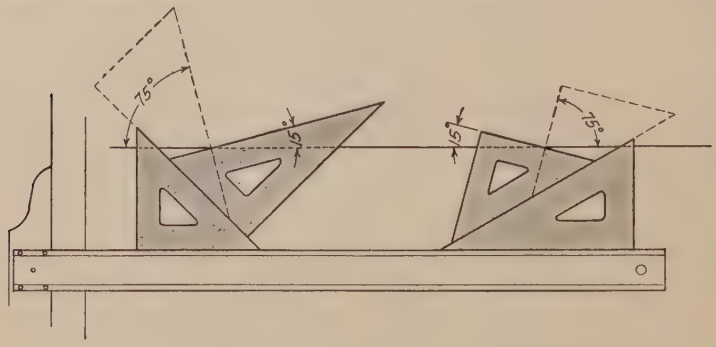

Fig. 21.—To draw angles of 15° and 75°.

triangle into 4 or 8 parts, with the 60-degree triangle into 6 or 12 parts, and with both into 24 parts.

In using the triangles always keep the T-square at least a half inch *below* the starting line.

To draw a parallel to any line, Fig. 22, adjust to it a triangle held against the T-square or other triangle, hold the guiding

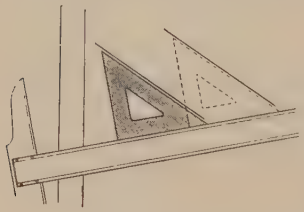

Fig. 22.—To draw parallel lines.

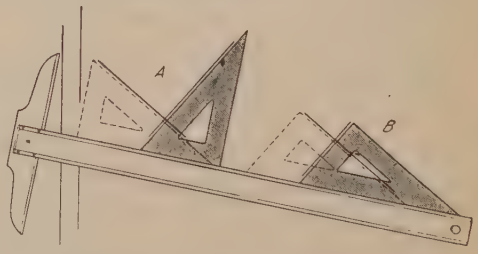

Fig. 23.—To draw perpendicular lines.

edge in position and slip the first triangle on it to the required position.

To draw a perpendicular to any line, Fig. 23*A*, fit the hypotenuse of a triangle to it, with one edge against the T-square or other triangle, hold the T-square in position and turn the triangle until its other side is against the edge, the hypotenuse will then be perpendicular to the line. Move it to the required position.

Or, a quicker method, set the triangle with the hypotenuse against the guiding edge, fit one side to the line, slide the triangle to the required point and draw the perpendicular as shown at *B*.

Never attempt to draw a perpendicular to a line by merely placing one leg of the triangle against it.

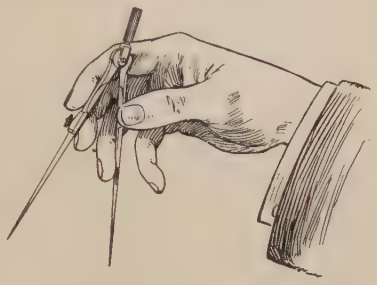

Fig. 24.—Handling the dividers.

11. Use of Dividers.—Facility in the use of this instrument is most essential, and quick and absolute control of its manipulation must be gained. It should be opened with one hand by pinching the chamfer with the thumb and second finger. This will throw it into correct position with the thumb and forefinger on the outside of the legs and the second and third finger on the inside, with the head resting just above the second joint of the forefinger, Fig. 24. It is thus under perfect control, with the thumb and forefinger to close it and the other two to open it. This motion should be practiced until an adjustment to the smallest fraction can be made. In coming down to small divisions the second and third fingers must be gradually slipped out from between the legs while they are closed down upon them.

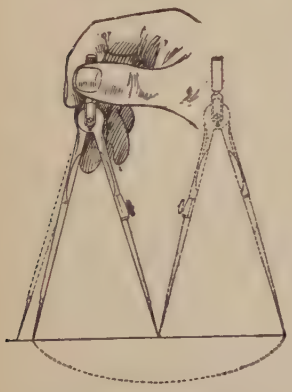

Fig. 25.—Bisecting a line.

12. To Divide a Line by Trial.—In bisecting a line the dividers are opened roughly at a guess to one-half the length. This distance is stepped off on the line, holding the instrument by the handle with the thumb and forefinger. If the division be short the leg should be thrown out to one-half the remainder, estimated by the eye, without removing the other leg from its position on the paper, and the line spaced again with this setting, Fig. 25. If this should not come out exactly the operation may be repeated. With a little experience a line may be divided in this way very rapidly. Similarly a line may be divided into any number of equal parts, say five, by estimating the first division, stepping this lightly

along the line, with the dividers held vertically by the handle, turning the instrument first in one direction and then in the other. If the last division fall short, one-fifth of the remainder should be added by opening the dividers, keeping the one point on the paper. If the last division be over, one-fifth of the excess should be taken off and the line respaced. If it is found difficult to make this small adjustment accurately with the fingers, the hair-spring may be used. It will be found more convenient to use the bow spacers instead of the dividers for small or numerous divisions. Avoid pricking unsightly holes in the paper. The position of a small prick point may be preserved if necessary by drawing a little ring around it with the pencil. For most work and until one is very proficient it is best to divide a line into a number of parts with the scale as explained on page 60.

13. Use of the Compasses.—The compasses have the same general shape as the dividers and are manipulated in a similar

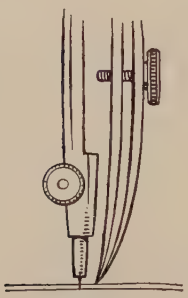

FIG. 26.—Needle point adjustment.

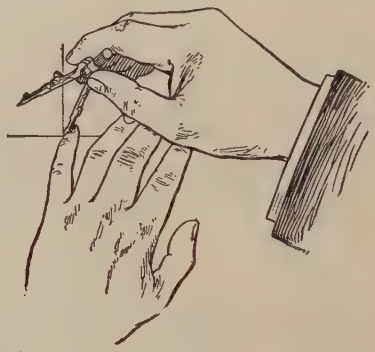

FIG. 27.—Guiding the needle point.

way. The needle point should first of all be adjusted by turning it with the shoulder point out, inserting the pen in the place of the pencil leg and setting the needle a trifle longer than the pen, Fig. 26. The needle point should be kept in this position so as to be always ready for the pen, and the lead adjusted to it. The lead should be sharpened on the sandpaper to fine wedge or long bevel point. Radii should be pricked off or marked on the paper and the pencil leg adjusted to the points. The needle point may be guided to the center with the little finger of the left hand, Fig. 27. When the lead is adjusted to pass exactly through the

mark the right hand should be raised to the handle and the circle drawn (clockwise) in one sweep by turning the compasses, rolling the handle with the thumb and forefinger, inclining it

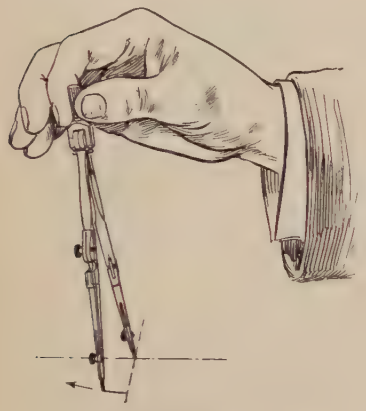

FIG. 28.—Starting a circle.

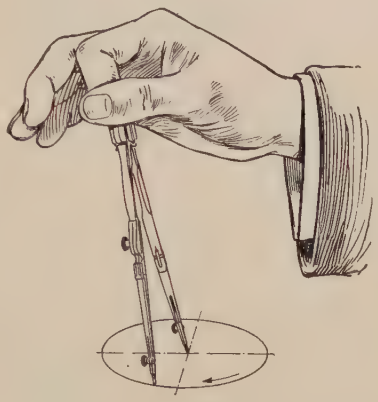

FIG. 29.—Completing a circle.

slightly in the direction of the line, Fig. 28. The position of the fingers after the revolution is illustrated in Fig. 29. The pencil line may be brightened if necessary by going back over it in the reverse direction (this is one exception to a caution at the end of the chapter). Circles up to perhaps three inches in diameter may be drawn with the legs straight but for larger sizes both the needle-point leg and the pencil or pen leg should be turned at the knuckle joints so as to be perpendicular to the paper, Fig. 30. The 6-inch compasses may be used in this way for circles up to perhaps ten inches in diameter; larger circles are made by using the lengthening bar, as illustrated in Fig. 31, or the beam compasses. In drawing concentric circles the *smallest* should always be drawn *first*.

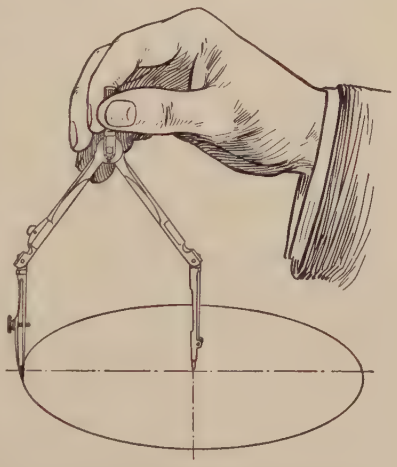

FIG. 30.—Drawing a large circle.

The **bow instruments** are used for small circles, particularly when a number are to be made of the same diameter. In chang-

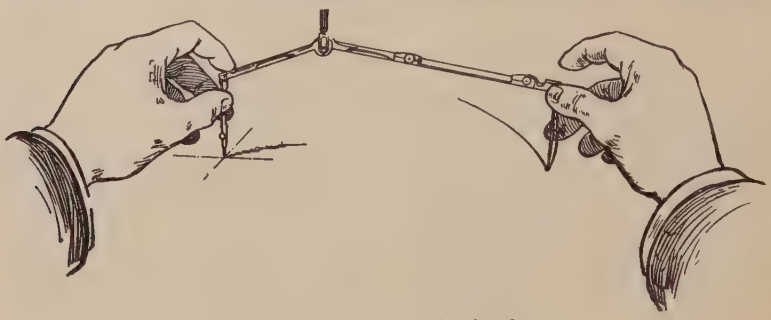

Fig. 31.—Use of lengthening bar.

ing the setting, to avoid wear and final stripping of the thread, the pressure of the spring against the nut should be relieved by holding the points in the left hand and spinning the nut in or out with the finger. Small adjustments should be made with one hand, with the needle point in position on the paper, Fig. 32.

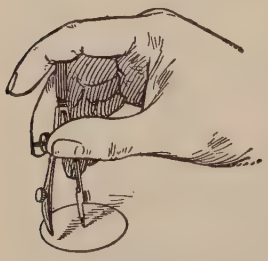

Fig. 32.—Adjusting the bow pen.

14. Use of the Scale.—In representing objects which are larger than can be drawn to their natural or full size it is necessary to reduce dimensions on the drawing in some regular proportion, and for this purpose the mechanical engineers' (or architects') scales are used. The first reduction is to what is commonly called "half size," or, correctly speaking, to the scale of $6'' = 1'$. This scale is used in working drawings even if the object be only slightly larger than could be drawn full size. If the draftsman does not have a "half-size" scale (see Fig. 15) he will use the full-size scale by considering six inches on the scale to represent one foot. Thus the half-inch divisions become full inches, each of which is divided into eighths of inches. (Do *not* use the scale of $\frac{1}{2}'' = 1'$ for half-size drawings.) If this reduction is too large for the paper the drawing is made to the scale of $3'' = 1'$ often called "quarter size," that is, three inches measured on the drawing is equal to one foot on the object. This is the first scale of the usual commercial set, on it the distance of three inches is divided

into twelve equal parts and each of these subdivided into eighths. This distance should be thought of not as three inches but as a foot divided into inches and eighths of inches. It is noticed that this foot is divided with the zero on the inside, the inches running to the left and the feet to the right, so that dimensions given in feet and inches may be read directly, as $1' - 0\frac{1}{2}''$, Fig. 33. On the other end will be found the scale of $1\frac{1}{2}' = 1'$

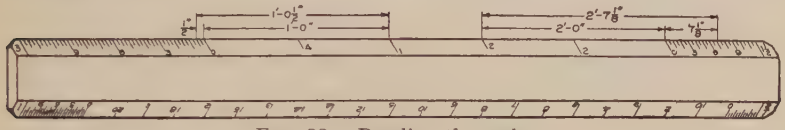

FIG. 33.—Reading the scale.

or "eighth size," with the distance of one and one-half inches divided on the right of the zero into twelve parts and subdivided into quarter inches, and the foot divisions to the left of the zero, coinciding with the marks of the 3″ scale.

If the $1\frac{1}{2}''$ scale is too large for the object, the next commercial size is the scale $1'' = 1'$, and so on down as shown in the following table.

Full size	$\frac{3}{4}'' = 1'$
Scale $6'' = 1'$ (half size)	$\frac{1}{2}'' = 1'$
$4'' = 1'$ (rarely used)	$\frac{3}{8}'' = 1'$
$3'' = 1'$ (quarter size)	$\frac{1}{4}'' = 1'$
$2'' = 1'$ (rarely used)	$\frac{3}{16}'' = 1'$
$1\frac{1}{2}'' = 1'$ (eighth size)	$\frac{1}{8}'' = 1'$
$1'' = 1'$	$\frac{3}{32}'' = 1'$

Drawings to odd proportions such as $9'' = 1'$, $4'' = 1'$ etc., are not used except in rare cases when it is desired to make it difficult or impossible for a workman to measure them with an ordinary rule.

The scale $\frac{1}{4}'' = 1'$ is the usual one for ordinary house plans, and is often called by architects the "quarter scale." This term should not be confused with the term "quarter size," as the former means one-fourth inch to one foot and the latter one-fourth inch to one inch.

A circle is generally given in terms of its diameter. To draw it the radius is necessary. In drawing to half size it is thus often convenient to lay off the amount of the diameter with a 3″ scale and to use this distance as the radius.

As far as possible successive measurements on the same line should be made without shifting the scale.

For plotting and map drawing the civil engineers' scale of decimal parts 10, 20, 30, 40, 50, 60, 80, 100 to the inch, is used. This scale should never be used for machine or structural work.

The important thing in drawing to scale is to think of and speak of each dimension in its full size and not in the reduced size it happens to be on the paper.

15. Inking.—After being penciled, drawings are finished either by inking on the paper, or in the great majority of work, by tracing in ink on tracing cloth. The beginner should become

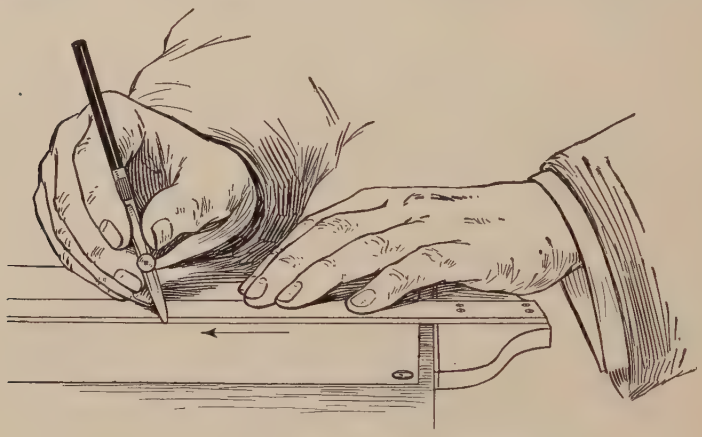

FIG. 34.—Correct position of ruling pen.

proficient in inking on cloth as well as on paper. Tracing and blue printing are described in detail in Chapter XIX.

The ruling pen is never used freehand, but always in connection with a guiding edge, either T-square, triangle, straightedge or curve. The T-square and triangle should be held in the same positions as for penciling. *It is bad practice to ink with the triangle alone.*

To fill the pen take it to the bottle and touch the quill filler between the nibs, being careful not to get any ink on the outside of the blades. Not more than three-sixteenths to one-fourth of an inch should be put in or the weight of the ink will cause it to drop out in a blot. The pen should be held as illustrated in Fig. 34, with the thumb and second finger in such position that they may be used in turning the adjusting screw, and the handle resting on the forefinger. This position should be

observed carefully, as the tendency will be to bend the second finger to the position in which a pencil or writing pen is held, which is obviously convenient in writing to give the up stroke, but as this motion is not required with the ruling pen the position illustrated is preferable.

For full lines the screw should be adjusted to give a strong line, of the size of the first line of Fig. 39. A fine drawing does not mean a drawing made with fine lines, but with uniform lines, and accurate joints and tangents.

16. The pen should be held against the straight-edge with the blades parallel to it, the handle inclined slightly to the right and always kept in a plane through the line perpendicular to the paper. The pen is thus guided by the upper edge of the ruler, whose distance from the pencil line will therefore vary with its thickness, and with the shape of the under blade of the pen, as illustrated in actual size in Fig. 35. If the pen point is thrown out from the perpendicular it will run on one blade and a line ragged on one side will result. If turned in from the perpendicular the ink is very apt to run under the edge and cause a blot.

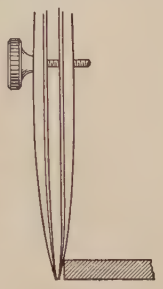

FIG. 35. — Pen and guide.

A line is drawn with a whole arm movement, the hand resting on the tips of the third and fourth fingers, keeping the angle of inclination constant. Just before reaching the end of the line the two guiding fingers on the straight-edge should be stopped, and, without stopping the motion of the pen, the line finished with a finger movement. Short lines are drawn with this finger movement alone. When the end of the line is reached lift the pen quickly and move the straight-edge away from the line. The pressure on the paper should be light, but sufficient to give a clean-cut line, and will vary with the kind of paper and the sharpness of the pen, but the pressure against the T-square should be only enough to guide the direction.

If the ink refuses to flow it is because it has dried and clogged in the extreme point of the pen. If pinching the blades slightly or touching the pen on the finger does not start it, the pen should immediately be wiped out and fresh ink added. Pens must be wiped clean after using or the ink will corrode the steel and finally destroy them.

In inking either on paper or cloth the full lines are much wider than the pencil lines and the beginner must be very careful to have the center of the ink line cover the pencil line, as shown in Fig. 36.

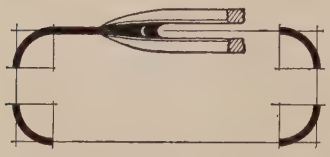

Fig. 36.—Inking a pencil line.

Instructions in regard to the ruling pen apply also to the compasses. The pen should be kept with both nibs on the paper by using the knuckle joint, and the instrument inclined slightly in the direction of the line. In adjusting the compasses for an arc which is to connect other lines the pen point should be brought down very close to the paper without touching it to be sure that the setting is exactly right.

It is a universal rule in inking that *circles and circle arcs must be drawn first.* It is much easier to connect a straight line to a curve than a curve to a straight line.

It should be noted particularly that two lines are tangent to each other when the center lines of the lines are tangent, and not when the lines simply touch each other, thus at the point of tangency the width will be equal to the width of a single line, Fig. 37.

After reading these paragraphs the beginner had best take a blank sheet of paper and cover it with ink lines of varying lengths and weights, practicing starting and stopping on penciled limits, until he feels acquainted with the pens. If in his set there are two pens of different sizes the larger one should be used, as it fits the hand of the average man better than the smaller one, holds more ink, and will do just as fine work.

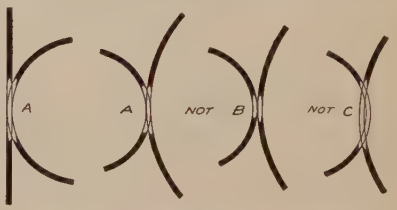

Fig. 37.—Correct and incorrect tangents.

17. Faulty Lines.—If inked lines appear imperfect in any way the reason should be ascertained immediately. It may be the fault of the pen, the ink, the paper, or the draftsman, but with the probabilities greatly in favor of the last. Figure 38 illustrates the characteristic appearance of several kinds of faulty lines. The correction in each case will suggest itself.

High-grade pens usually come from the makers well sharpened. Cheaper ones often need dressing before they can be used

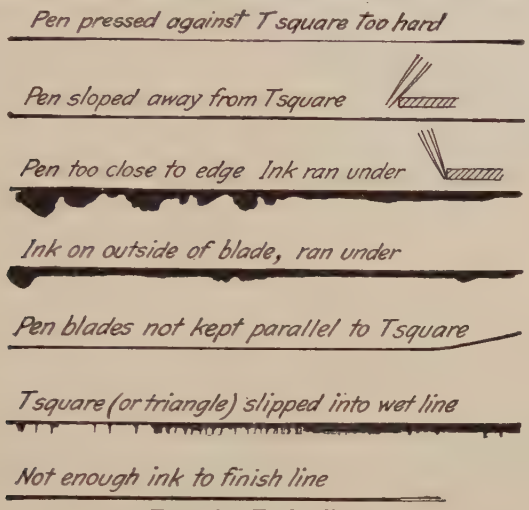
Pen pressed against T square too hard
Pen sloped away from Tsquare
Pen too close to edge Ink ran under
Ink on outside of blade, ran under
Pen blades not kept parallel to Tsquare
Tsquare (or triangle) slipped into wet line
Not enough ink to finish line

FIG. 38.—Faulty lines.

satisfactorily. If the pen is not working properly it must be sharpened as described in Chapter XXI, page 415.

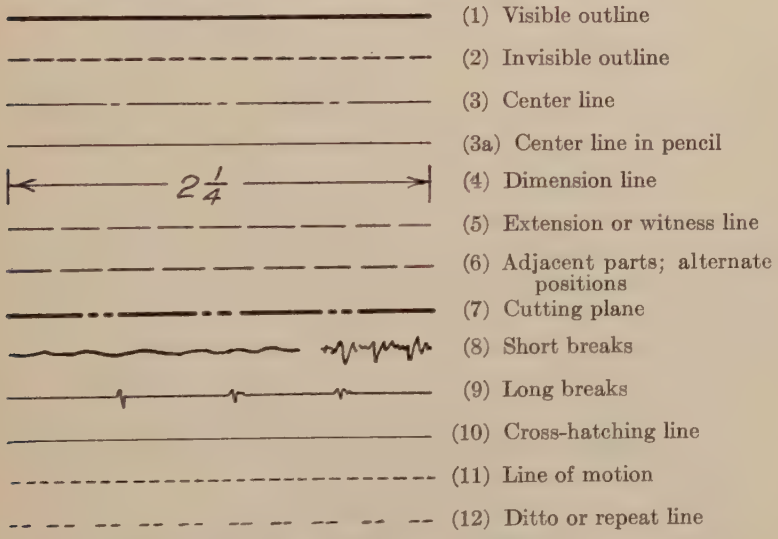

FIG. 39.—The alphabet of lines.

18. The Alphabet of Lines.—As the basis of the drawing is the line, a set of conventional symbols covering all the lines

needed for different purposes may properly be called an alphabet of lines. The American Standards Association (formerly called the American Engineering Standards Committee) is recommending as American Standard the first ten lines of Fig. 39. The last two while not included in the Standard have occasional limited use. Three widths of lines are recommended, Nos. 1 and 7 heavy, 2, 6, and 9 medium, the others fine. It is of course not possible to set an absolute standard of weight for lines, as the

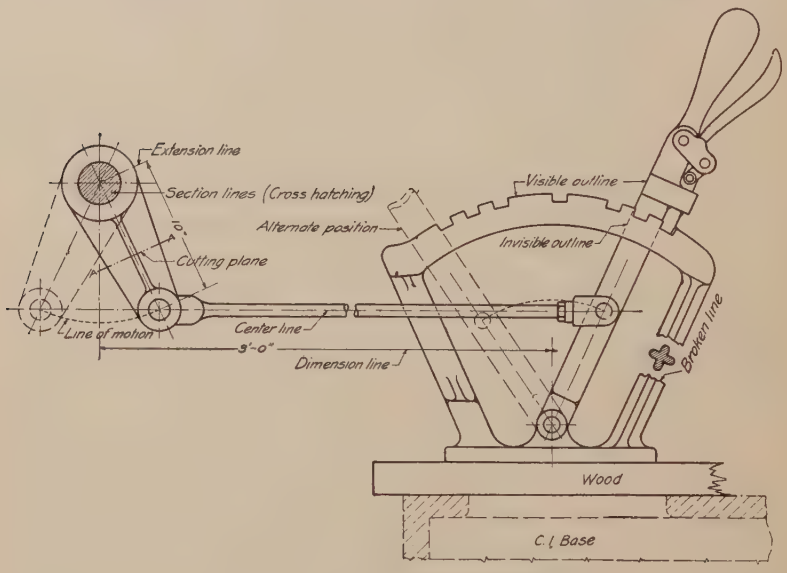

Fig. 40.—The alphabet illustrated.

proper size to use will vary with different kinds and sizes of drawings, but it is possible to maintain a given contrast.

Visible outlines should be strong full lines, at least one sixty-fourth of an inch on paper drawings, and even as wide as one thirty-second of an inch on tracings. The other lines should contrast with this line in about the proportion of Fig. 39.

Dash lines, as (2) and (7), should always have the space between dashes much shorter than the length of the dash. Figure 40 illustrates the use of the alphabet of lines.

19. The Use of the French Curve.—The French curve, as has been stated on page eleven is a ruler for non-circular curves. When sufficient points have been determined it is best to sketch in the line lightly in pencil freehand, without losing the points,

until it is clean, smooth, continuous, and satisfactory to the eye. The curve should then be applied to it, selecting a part that will fit a portion of the line most nearly, and noting particularly that the curve is so laid that the direction of its increase in curvature is in the direction of increasing curvature of the line, Fig. 41. In drawing the part of the line matched by the curve, always stop a little short of the distance that seems to coincide. After drawing this portion the curve is shifted to find another part that will coincide with the continuation of the line. In shifting the curve care should be taken to preserve the smoothness and continuity and to avoid breaks or cusps. This may be done if in its successive positions the curve is always adjusted so that it coincides

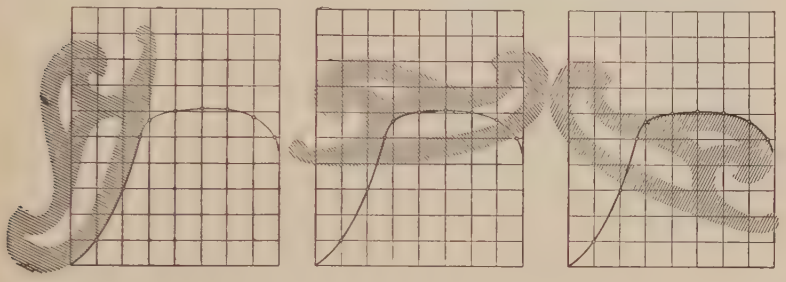

Fig. 41.—Use of the irregular curve.

for a little distance with the part already drawn. Thus at each joint the tangents must coincide.

If the curved line is symmetrical about an axis, after it has been matched accurately on one side marks locating the axes may be made in pencil on the curve and the curve reversed. In such a case exceptional care must be taken to avoid a "hump" at the joint. It is often better to stop a line short of the axis on each side and to close the gap afterward with another setting of the curve.

When inking with the curve the pen should be held perpendicularly and the blades kept parallel to the edge. Inking curves will be found to be excellent practice.

Sometimes, particularly at sharp turns, a combination of circle arcs and curve may be used, as for example in inking a long, narrow ellipse the sharp curves may be inked by selecting a center on the major axis by trial, and drawing as much of an arc as will practically coincide with the ends of the ellipse, then finishing the ellipse with the curve.

The experienced draftsman will sometimes ink a curve that cannot be matched accurately, by varying the distance of the pen point from the ruling edge as the line progresses, but the beginner should not attempt it.

20. Exercises in the Use of Instruments.—The following figures may be used, if desired, as progressive exercises for practice in the use of the instruments, either in pencil only, or afterward to be inked. The geometrical figures of Chapter V afford excellent practice in accurate penciling.

1. An Exercise for the T-square, Triangle and Scale.—Fig. 42. Through the center of the space draw a horizontal and a vertical line, measuring on these lines as diameters lay off a four-inch square. Along the lower side and the upper half of the left side measure $\frac{1}{2}''$ spaces with the scale. Draw all horizontal lines with the T-square and all vertical lines with the T-square and triangle.

2. "A Swastika."—For T-square, triangle and dividers. Fig. 43. Draw a four-inch square. Divide left side and lower side into five equal parts with dividers. Draw horizontal and vertical lines across the square through these points. Erase the parts not needed.

3. A Street Paving Intersection.—For 45-degree triangle and scale. Fig. 44. An exercise in starting and stopping short lines. Draw a four-inch

FIG. 42.

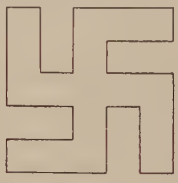

FIG. 43.

FIG. 44.

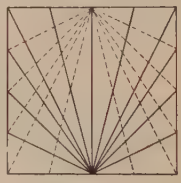

FIG. 45.

square. Draw diagonals with 45-degree triangle. With scale lay off $\frac{1}{2}''$ spaces along the diagonals, from their intersection. With 45-degree triangle complete figure, finishing one quarter at a time.

4. Converging Lines.—Full and dotted. Fig. 45. Divide the sides of a four-inch square into four equal parts. From these points draw lines to the middle points of the upper and lower sides as shown, using the triangle alone as a straight edge.

5. A Hexagonal Figure.—For 30°–60° triangle and bow points (spacers). Fig. 46. Through the center of the space draw the three construction lines *AB* vertical, *DE* and *FG* at 30 degrees. Measure *CA* and *CB* 2 inches long. Draw *AE*, *DB*, *FA* and *BG* at 30 degrees. Complete hexagon by drawing *FD* and *EG* vertical. Set spacers at $\frac{1}{8}''$. Step off $\frac{1}{8}''$ on each side of the center lines, and $\frac{1}{4}''$ from each side of hexagon. Complete figures as shown, with triangle against T-square.

6. A Maltese Cross.—For T-square, spacers, and both triangles. Fig. 47. Draw a four-inch square and a one-and-three-eighths-inch square. From

the corners of inner square draw lines to outer square at 15 degrees and 75 degrees, with the two triangles in combination. Mark points with spacers ¼″ inside of each line of this outside cross, and complete figure with triangles in combination.

7. Concentric Circles.—For compasses (legs straight) and scale. Fig. 48. Draw horizontal line through center of space. On it mark off radii for eight concentric circles ¼″ apart. In drawing concentric circles always draw the smallest first. The dotted circles are drawn in pencil with long dashes, and inked as shown.

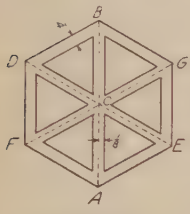

Fig. 46.

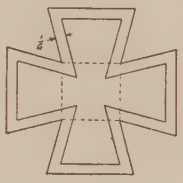

Fig. 47.

Fig. 48.

Fig. 49.

8. Air Craft Insignia.—This device is a white star with red center on a blue background. Fig. 49. Draw a four-inch circle and a one-inch circle. Divide large circle into five equal parts with the dividers, and construct star by connecting alternate points as shown. Red is indicated by vertical lines and blue by horizontal lines. Space these by eye approximately 1/16″ apart. (Standard line symbols for colors are given in Fig. 733.)

9. Circle Arc Design.—For compasses (knuckle joints bent) Fig. 50. In a four-inch circle draw four diameters 45 degrees apart. With 5″ radius and centers on these lines extended complete figure as shown.

10. Tangent Arcs.—For accuracy with compasses and dividers. Fig. 51. Draw a circle four inches in diameter. Divide the circumference into five

Fig. 50.

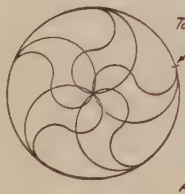

Fig. 51.

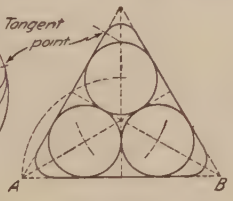

Fig. 52.

Fig. 53.

equal parts by trial with dividers. From these points draw radial lines and divide each into four equal parts with spacers. With these points as centers draw the semicircles as shown.

11. Tangent Circles and Lines.—For accuracy with compasses and triangles. Fig. 52. On base AB, 4½″ long construct an equilateral triangle, using the 60-degree triangle. Bisect the angles with the 30-degree angle, extending the bisectors to the opposite sides. With these middle points of the sides as centers and radius equal to one-half the side, draw arcs cutting the bisectors. These intersections will be centers for the inscribed

circles. With centers on the intersections of these circles and the bisectors, round off the points of the triangle with tangent arcs as shown. Remember the rule that circles are inked before straight lines.

12. Tangents to Circle Arcs.—For bow compasses. Fig. 53. Draw a two-inch square about center of space. Divide AE into four $\frac{1}{4}''$ spaces, with scale. With bow pencil and centers A, B, C, D draw four semicircles with $\frac{1}{4}''$ radius and so on. Complete figure by drawing the horizontal and vertical tangents as shown.

A PAGE OF CAUTIONS

Never use the scale as a ruler.
Never draw with the lower edge of the T-square.
Never cut paper with a knife and the edge of the T-square as a guide.
Never use the T-square as a hammer.
Never put either end of a pencil into the mouth.
Never work with a dull pencil.
Never sharpen a pencil over the drawing board.
Never jab the dividers into the drawing board.
Never oil the joints of compasses.
Never use the dividers as reamers or pincers or picks.
Never lay a weight on the T-square to hold it in position.
Never use a blotter on inked lines.
Never screw the nibs of the pen too tight.
Never run backward over a line either with pencil or pen.
Never leave the ink bottle uncorked.
Never hold the pen over the drawing while filling.
Never dilute ink with water. If too thick throw it away. (Ink once frozen is worthless afterward.)
Never put a writing pen which has been used in ordinary writing ink, into the drawing-ink bottle.
Never try to use the same thumb-tack holes when putting paper down a second time.
Never scrub a drawing all over with the eraser after finishing. It takes the life out of the inked lines.
Never begin work without wiping off table and instruments.
Never put instruments away without cleaning. This applies with particular force to pens.
Never put bow instruments away without opening to relieve the spring.
Never fold a drawing or tracing.
Never use cheap materials of any kind.

CHAPTER IV

Lettering

To give all the information necessary for the complete construction of a machine or structure there must be added to the "graphical language" of lines describing its shape, the figured dimensions, notes on material and finish, and a descriptive title, all of which must be lettered, freehand, in a style that is perfectly legible uniform and capable of rapid execution. So far as its appearance is concerned there is no part of a drawing so important as the lettering. A good drawing may be ruined, not only in appearance but in usefulness, by lettering done ignorantly or carelessly, as illegible figures are very apt to cause mistakes in the work.

21. The paragraph above refers to the use of lettering on engineering drawings. In a broad sense the subject of Lettering is a distinct branch of design. There are two general classes of persons who are interested in its study, first those who have to use letters and words to convey information on drawings; second, those who use lettering in applied design, as art students, artists and craftsmen. The first class is concerned mainly with legibility and speed, the second with beauty of form and composition. Architects come under both classes, as they have both to letter their working drawings and to design inscriptions and tablets to be executed in stone or bronze.

The engineering student takes up lettering as his first work in drawing, and continues its practice throughout his course, becoming more and more skilful and proficient.

In the art of lettering there are various forms of alphabets used, each appropriate for some particular purpose. The parent of all these styles is the "Old Roman" of the Classic Roman inscriptions. This beautiful letter is the basic standard for

architects and artists, although they have occasional appropriate use for other forms such as the Gothic of the Middle Ages, popularly known as Old English. A variation known as Modern Roman is used by civil engineers in finished map and topographical drawing. For working drawings the simplified forms called commercial gothic are used almost exclusively.

In the execution of all lettering there are two general divisions, *drawn* or *built up* letters, and *written* or *single-stroke* letters. Roman letters are usually drawn in outline and filled in; commercial gothic, except in larger size, are generally made in single stroke.

Lettering is *not* mechanical drawing. Large, carefully drawn letters are sometimes made with instruments, but the persistent use by some draftsmen of kinds of mechanical caricatures known as "geometrical letters," "block letters," etc., made up of straight lines and ruled in with T-square and triangle is to be condemned entirely.

22. General Proportions.—There is no one standard for the proportions of letters, but there are certain fundamental points in design and with the individual letters certain characteristics that must be thoroughly learned by study and observation before composition into words and sentences may be attempted. Not only do the widths of letters in any alphabet vary, from I, the narrowest, to W, the widest, but different alphabets vary as a whole. Styles narrow in their proportion of width to height are called "COMPRESSED LETTERS" and are used when space is limited. Styles wider than the normal are called "EXTENDED LETTERS."

The proportion of the thickness of stem to the height varies widely, ranging all the way from one-third to one-twentieth. Letters with heavy stems are called **bold face** or **black face,** those with thin stems *light face.*

23. The Rule of Stability.—In the construction of letters the well-known optical illusion in which a horizontal line drawn across the middle of a rectangle appears to be below the middle must be provided for. In order to give the appearance of stability such letters as B E K S X Z, and the figures 3 and 8 must be drawn smaller at the top than the bottom. To see the effect of this illusion turn a printed page upside down and notice the letters mentioned.

24. Single-stroke Lettering.—By far the greatest amount of lettering on drawings is done in a rapid "single-stroke" letter

either vertical or inclined and every engineer must have absolute command of these styles. The ability to letter well can be acquired only by continued and careful practice, but it can be acquired by anyone with normal muscular control of his fingers, who will take the trouble to observe carefully the shapes of the letters, the sequence of strokes composing them and the rules for composition; and will practice faithfully and intelligently. It is not a matter of artistic talent, nor even of dexterity in hand-writing. Many draftsmen letter well who write very poorly.

The terms "single-stroke" or "one-stroke" do not mean that the entire letter is made without lifting the pen, but that the width of the stroke of the pen is the width of the stem of the letter. For the desired height, therefore, a pen must be selected which will give the necessary width of stroke without spreading the nibs and one that will make a uniform stroke in all directions.

FIG. 54.—Pen strokes, full size.

25. Lettering Pens.—There are a number of steel writing pens either adaptable or made especially for lettering. The sizes of strokes, reproduced full size, of a few popular ones are illustrated in Fig. 54. Several special pens made in sets of graded sizes have been designed for single-stroke lettering, notably the Barch-Payzant, Speedball and Shepard pens. For large work in particular they are very useful. (see Fig. 710.)

A penholder with cork grip (the "small size") should be chosen and the pen set in it firmly. Many prefer to ink the pen with the quill filler, touching the quill to the inside of the pen point, rather than to dip it into the ink bottle. If dipped, the surplus ink should be shaken back into the bottle or the pen touched against the neck of the bottle as it is withdrawn. Getting too much ink on the pen is responsible for appearances of the kind shown in Fig. 55. Always wet a new pen and wipe it

FIG. 55.—Too much ink.

thoroughly before using, to remove the oil film. Some draftsmen prepare a new pen by holding it in a match flame for two or three seconds. A lettering pen well "broken-in" by use is worth much more than a new one, and should be given the same care as other drawing instruments. A pen that has been used in writing ink should never be put in drawing ink. When in use a pen should be wiped clean frequently, with a cloth penwiper. A pen fitted with a feeder as described on page 427 is of great aid in lettering.

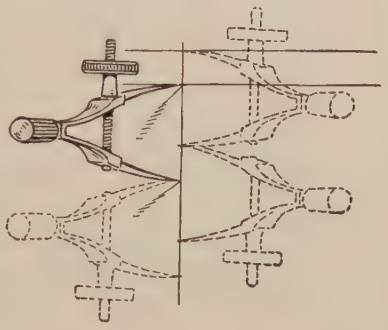

FIG. 56.—Spacing lines.

26. Other Materials.—It is important to have a good quality of unglazed paper with hard surface for practicing lettering. Sometimes cross-section or specially lined paper is used. Plain paper should be ruled with pencil lines for the tops and bottoms of the letters. Figure 56 illustrates the method of spacing lines. Mark the height of the letter on the first line, then set the bow spacers to the distance wanted between base lines and step off the required number of lines. With the same setting step down again from the upper point, thus obtaining points for the top and bottom for each line of letters. The Braddock-Rowe

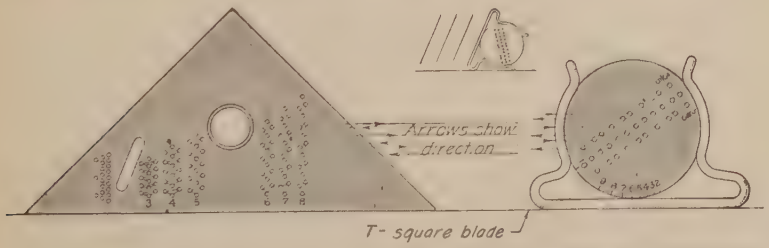

FIG. 57.—Braddock-Rowe triangle. FIG. 58.—Ames lettering instrument.

triangle, Fig. 57, and the Ames lettering instrument, Fig. 58, are convenient devices for spacing lines of letters. A sharp pencil is inserted in the countersunk holes and the instrument, guided by a T-square blade, drawn back and forth by the pencil. The holes are grouped for guide lines for capitals and lower-case, the numbers indicating heights of capitals in thirty-seconds of an

inch, thus No. 6 spacing means that the capitals will be $\frac{6}{32}''$, or $\frac{3}{16}''$ high.

Guide lines should be drawn lightly with a sharp hard pencil, 4H or 6H. Letters are drawn with a softer pencil, 2H or H, with a conical point, and the habit should be formed of rotating the pencil in the fingers after each few strokes to keep the point symmetrical.

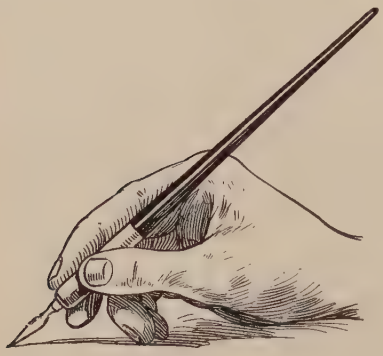

Fig. 59.—Position for lettering.

Both pencil and pen should be held easily, as in writing, in the position shown in Fig. 59, the strokes drawn with a steady even motion, and a slight, uniform pressure on the paper, not enough to cut a groove with the pencil, or spread the nibs of the pen.

27. Single-stroke Vertical Capitals.—The vertical single-stroke "commercial gothic" letter shown in Fig. 60 is a standard for titles, reference letters, etc. In the proportion of width to height the general rule is that the smaller the letters the more extended their width should be. A low extended letter is more legible than a high compressed one, and at the same time makes a better appearance. This letter is seldom used in compressed form.

I H T L E F N Z X Y V A K M W
O Q C G D U J P R B S &

Fig. 60.—Vertical single-stroke capitals.

The first requirement is to learn the form and peculiarity of each of the letters. Too many persons think that lettering is simply "printing" in the childish way learned in the primary grades. There is an individuality in lettering often nearly as marked as in handwriting, but it must be based on a careful regard for the fundamental letter forms.

28. In the following figures the vertical capitals have been arranged in family groups. The shape of each letter, with the order and direction of the strokes forming it must be studied

carefully and the letter practised until its construction and form are perfectly familiar. The first studies should be made in pencil to large size, perhaps $\frac{3}{8}''$ high; afterward to smaller size directly in ink.

Vertical strokes are all made downward, and horizontal strokes from left to right. Always draw both top and bottom guide lines. The widths of the analyzed letters are shown in comparison with a square equal to the height. The letters are slightly extended and it will be noted that many of the letters practically fill the square.

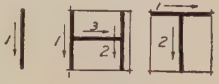

Fig. 61.

The I H T Group.—Fig. 61. The letter *I* is the foundation stroke. It may be found difficult to keep the stems vertical, if so direction lines may be drawn lightly an inch or so apart, to aid the eye. The *H* is nearly square, and, observing the rule of stability, the cross-bar is just above the center. The top of the *T* is drawn first to the full width of the square and the stem started accurately at its middle point.

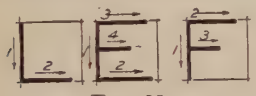

Fig. 62.

The L E F Group.—Fig. 62. The *L* is drawn in two strokes but without lifting the pen from the paper. Note that the first two strokes of the *E* are the same as the *L*, that the third or upper stroke is slightly shorter than the lower, the last stroke two-thirds as long, and just above the middle. *F* has the same proportions as *E*.

Fig. 63.

The N Z X Y Group.—Fig. 63. The parallel sides of *N* are generally drawn first, but some prefer to make the strokes in consecutive order. *Z* is drawn without lifting the pen. *Z* and *X* are both started inside the width of the square on top and run to full width on the bottom. This throws the crossing point of the *X* above the center. The junction of the *Y* strokes is below the center.

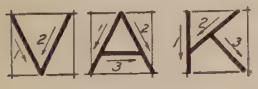

Fig. 64.

The V A K Group.—Fig. 64. *V* is slightly narrower than *A*, which here is the full width of the square. Its bridge is one-third up from the bottom. The second stroke of *K* strikes the stem one-third up from the bottom, the third stroke branches from it in a direction starting from the top of the stem.

Fig. 65.

The M W Group.—Fig. 65. These are the widest letters. *M* may be made either in consecutive strokes, or by drawing the two vertical strokes first, as with the *N*. *W* is formed of two narrow *V*'s. Note that with all the pointed letters the width at the point is the width of the stroke, that is, the center lines of the strokes meet at the guide lines.

Fig. 66.

The O Q C G Group.—Fig. 66. In this extended alphabet the letters of the "*O*" family are made as full circles. The *O* is made in two strokes, the left side a longer arc than the right, as the right side is harder to draw. Make the kern of the *Q* straight or nearly straight. *C* and *G* of large size can be drawn more accurately with an extra stroke at the top, while in smaller ones the curve is drawn in one stroke. Note that the bar on the *G* is halfway up and does not extend past the vertical line.

Fig. 67.

The D U J Group.—Fig. 67. The top and bottom strokes of *D* must be horizontal. Failure to observe this is a common fault with beginners. *U* in larger letters is formed of two parallel strokes to which the bottom stroke is added. For smaller letters it may be made in two strokes curved at the bottom to meet. *J* has the same construction as *U*.

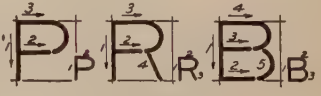

Fig. 68.

The P R B Group.—Fig. 68. With *P R* and *B* the number of strokes used depends upon the size of the letter. For large letters the horizontal lines are started and the curves added, but for smaller letters only one stroke for each lobe is needed. The middle lines of *P* and *R* are on the center line, that of *B* observes the rule of stability.

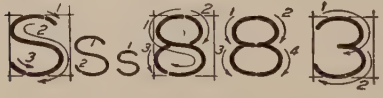

Fig. 69.

The S 8 3 Group.—Fig. 69. The *S*, *8* and *3* are closely related in form, and the rule of stability must be observed carefully. For a large *S* three strokes may be used, for a smaller one two strokes, and for a very small size, one stroke only is best. The *8* may be made on the *S* construction in three strokes,

or in "head and body" in four strokes. A perfect *3* should be capable of being finished into an *8*. The *3* with flat top, sometimes seen, should not be used, on account of the danger of mistaking it for a *5*.

The 0 6 9 Group.—Fig. 70. The cipher is slightly narrower than the letter *O*. The backbones of the *6* and *9* have the same curve as the cipher, and the lobes are two-thirds the height of the figure.

Fig. 70.

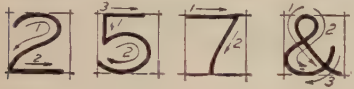

Fig. 71.

The 2 5 7 & Group.—Fig. 71. The secret of the *2* lies in getting the reverse curve to cross the center of the space. The bottom of *2* and the top of *5* and *7* should be straight lines. The second stroke of *7* terminates directly below the middle of the top stroke. Its stiffness is relieved by curving it slightly at the lower end. The ampersand (&) is made in three strokes for large letters and two for smaller ones, and must be carefully balanced.

The Fraction Group.—Fig. 72. Fractions are always made with horizontal bar. The figures are two-thirds the height of the whole numbers, with a clear space above and below the bar, making the total height of the fraction five-thirds the cap height. Much practice should be given to numerals and fractions, combining them into dimensions, following the conventional rules on page 177. A useful practice sheet of figures alone may be made by designing a table of decimal equivalents. See Appendix for table.

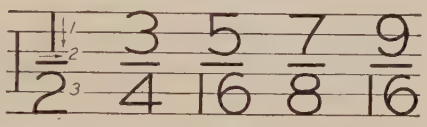

Fig. 72.

29. Vertical Lower Case.—The single-stroke vertical lower case letter is not commonly used on machine drawings but is used extensively in map drawing. It is the standard letter for hypsography in government topographical drawing. The bodies are made two-thirds the height of the capitals with the ascenders extending to the cap line and the descenders dropping the same distance below. The basis of the letter as used with the extended capitals just analyzed, is the combination of a circle and a straight line as shown in enlarged

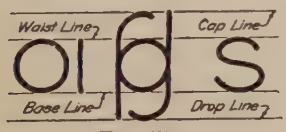

Fig. 73.

form in Fig. 73. The alphabet with some alternate shapes is shown in Fig. 74, which figure also gives the capitals in alphabetical order.

30. Single-stroke Inclined Caps.—The inclined or slant letter is used in preference to the upright by many, including the

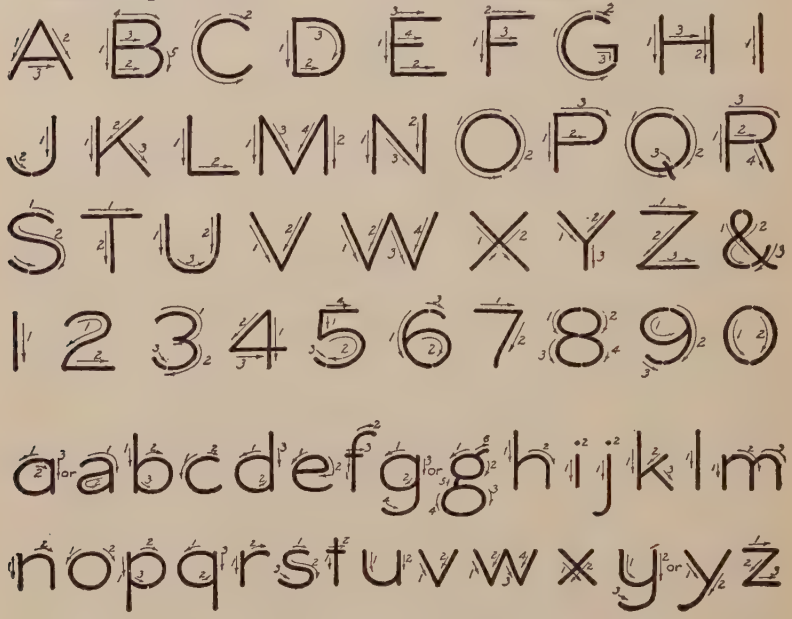

Fig. 74.—Single stroke vertical caps and lower case.

majority of structural steel draftsmen. The order and direction of strokes are the same as in the vertical form.

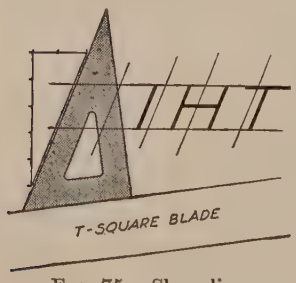

Fig. 75.—Slope lines.

After ruling the guide lines, slanting "direction lines" should be drawn across the sheet to aid the eye in keeping the slope uniform. These may be drawn with a special lettering triangle (of about $67\frac{1}{2}°$) or by setting a slope of 2 to 5 by marking two units on a horizontal line and five on a vertical line, and using T-square and triangle as shown in Fig. 75. The form taken by the rounded letters when inclined is illustrated in Fig. 76, showing that curves are sharp in all upper right-hand and lower left-hand corners and flattened in the other two

corners. The snap and swing of professional work is due to three things, first, keeping a uniform slope, second, having the letters full and well shaped, third, keeping them close together. The beginner's invariable mistake is to cramp the individual letters and space them too far apart.

Fig. 76.

Fig. 77.

Particular care must be observed with the letters having sloping sides as *A*, *V*, and *W*. The sloping sides of these letters must be drawn so that they appear to balance about a slope guide

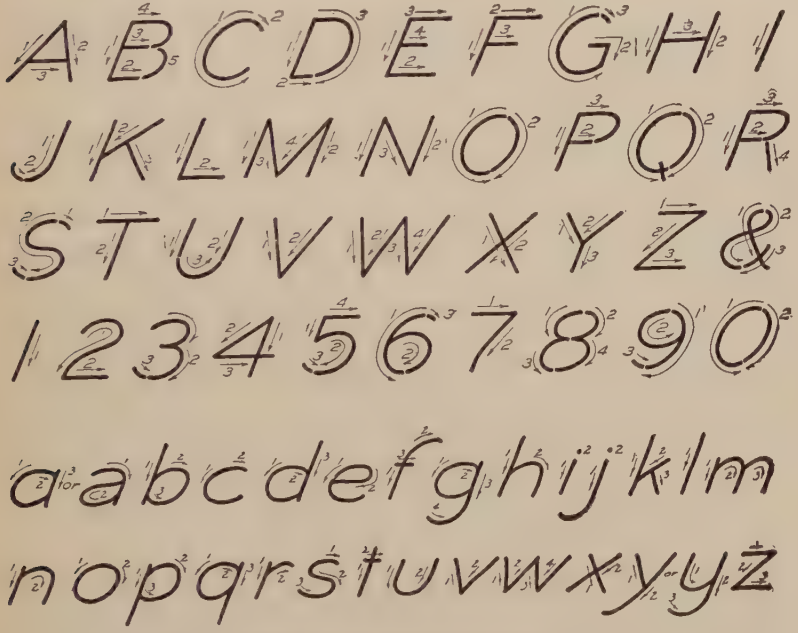

Fig. 78.—Single stroke inclined caps and lower case.

line through their intersection as in Fig. 77. The alphabet is given in Fig. 78. Study the shape of each letter carefully.

31. Single-stroke Inclined Lower Case.—The inclined lower-case letters, Fig. 78, are drawn with the bodies two-thirds the height of the capitals. This letter is generally known among older engineers as the Reinhardt letter in honor of Mr. Charles W. Reinhardt who first systematized its construction. It is

very legible and effective, and after its swing has been mastered can be made very rapidly. The lower-case letter should be used in all notes and statements on drawings for the two reasons indicated, (1) it is read much more easily than all caps, as we read words by the word-shapes and are familiar with these shapes in the lower-case letters, (2) it can be done much faster than all caps.

Fig. 79.—The "straight line" letters.

All the letters of this alphabet are based on two elements, the straight line and the ellipse. The general direction of strokes is always downward or from left to right. Figure 79 illustrates the straight-line letters. Note that the dots of *i* and *j* and the top of the *t* are not on the cap line but slightly below, at a height called the "*t* line." All other ascenders touch the cap line. The slant side letters *v*, *w*, *x* and *z* are the same shape as the capitals with the sides balanced about the line of slope. The *j* and *y* are curved at the drop line, the other letters of this group are made entirely of straight lines with no unnecessary hooks or appendages.

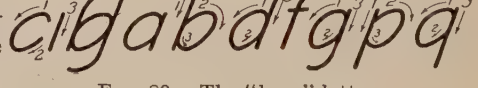

Fig. 80.—The "loop" letters.

Fig. 81.—The ellipse letters.

Figure 80 shows the construction of the "loop letters," made with an ellipse whose axis is inclined about 45 degrees, in combination with a straight line. In lettering rapidly this ellipse tends to assume a "pumpkin seed" form, which should be guarded against.

The *c*, *e* and *o*, Fig. 81, are based on the same ellipse as the capitals, not inclined quite as much as the loop letter ellipse. In rapid small work the *o* is often made in one stroke, as are also *e*, *v* and *w*. The *s* is similar to the capital, but except in letters more than ⅛ inch high is made in one stroke. Figure 82 shows the "hook letter" group. Note the characteristic sharp turn. The alternate form of *y* may be preferred to the angular form.

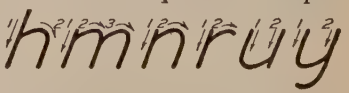

Fig. 82.—The "hook" letters.

The single-stroke letter may if necessary be very much compressed and still be clear and legible. It is also sometimes used

in extended form. Figure 83 shows inclined compressed, and vertical extended letters of the same height, in composition.

32. Composition.—Composition in lettering has to do with the selection of appropriate styles and sizes of letters, arrangement

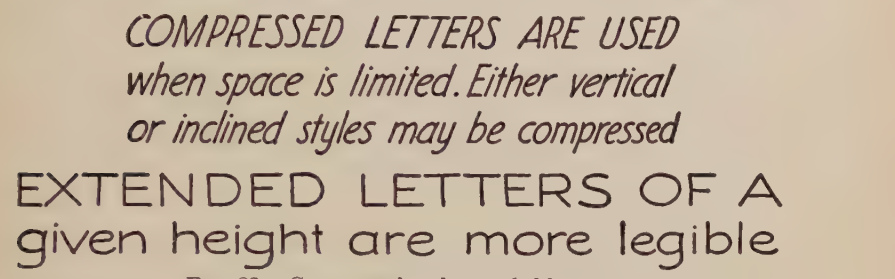
COMPRESSED LETTERS ARE USED
when space is limited. Either vertical
or inclined styles may be compressed
EXTENDED LETTERS OF A
given height are more legible

FIG. 83.—Compressed and extended letters.

and spacing. After the shapes and strokes of the individual letters have been mastered the entire practice should be on composition into words and sentences, since proper spacing of letters and words does more for the appearance of a block of lettering than the formation of the letters themselves. Letters in words are not spaced at a uniform distance from each other, but so that the areas of white spaces (the irregular backgrounds between the letters) are approximately equal, making them *appear* to be spaced uniformly. Each letter is spaced with reference to its shape and the shape of the letter preceding it. Thus adjacent letters with straight sides would be spaced farther

FIG. 84.—Word composition.

apart than those with curved sides. Sometimes combinations such as *LT* or *AV* may even overlap. The entire word or line must be studied to find what combination will set the area. It may be a word with round letters in it, or a combination like *LA*. Definite rules for spacing are not successful; it is a matter of artistic judgment. Figure 84 illustrates word composition.

The sizes of letters to use in any particular case may be determined better by sketching them in lightly, than by judging from the guide lines alone. A finished line of letters always looks larger than the guide lines would indicate. Avoid the use of a

coarse pen for small sizes, as well as one making thin wiry lines for large sizes. Before inking a line of penciled letters rub the pencil marks so the excess graphite will not "muddy" the ink.

When Caps and Small Caps are used the height of the small caps should be about four-fifths that of the caps.

Words should be spaced so as to read easily and naturally. The clear distance between words (except in compressed lettering), should never be less than a space equal to the height of the letter, nor more than twice this space. The clear distance between lines may vary from one-half to one and one-half times the height of the caps.

The appearance of notes with several lines is improved by keeping the right edge as straight as possible as well as the left. Paragraphs should always be indented.

33. Titles.—The most important problem in lettering composition which the engineering draftsman will meet is the design of titles. Every drawing has a descriptive title giving the necessary information concerning it, which is either all hand-lettered or filled in on a printed form. This information, of course, varies for different kinds of drawings (see working drawing titles, page

Fig. 85.—Shapes in symmetrical composition.

236; architectural titles, page 343; structural titles, page 352; map titles, page 373).

The usual form of lettered title is the *symmetrical title* which is balanced or "justified" on a vertical center line and with an elliptical or oval outline. Sometimes the wording necessitates a pyramid or inverted pyramid ("bag") form. Figure 85 illustrates several shapes into which titles might be composed. The lower right-hand corner of the sheet is from long custom and on account of convenience in filing, the usual location, and in laying out a drawing this corner is reserved if possible. The space given is a matter of artistic judgment depending on the size and purpose of the drawing. On a 12 × 18 working drawing the title might be about 3 inches long.

34. To Draw a Title.—When the wording has been determined, write out the arrangement on a separate piece of paper as in Fig. 86 (or better, typewrite it). The lines must be displayed

for prominence according to their relative importance, judged from the point of view of the persons who will use the drawing. Titles are usually made in all caps. Count the letters, including the word spaces, and make a mark across the middle letter or space of each line. Draw the base line for the most important line of the title and mark on it the approximate length desired. To get the letter height divide this length by the number of letters in the line, and draw the cap line. Start at the center line and sketch very lightly the last half of the line, drawing only enough of the letters to show the space each will occupy. Lay off the length of the right half on the other side and sketch that side, working either forward or backward. When this line is satisfactory in size and spacing draw the remainder in the same way. Study the effect, shift letters or lines if necessary, and complete in pencil.

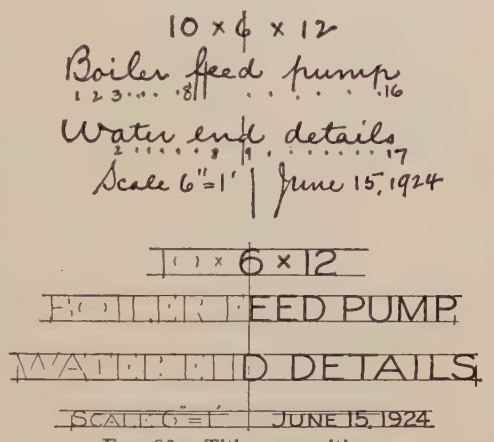

Fig. 86.—Title composition.

Use punctuation marks only for abbreviations.

35. The Scratch-paper Methods.—Sketch each line of the title on a piece of scratch paper, on guide lines of the determined height. Find the middle point of each line, fold the paper along the base of the letters, fit the middle to the center line on the drawing and draw the final letters directly below the tentative ones. *Or*, draw the letters along the edge of the scratch paper using either the upper or lower edge as one of the guide lines. *Or*, letter the title on scratch paper, cut apart and adjust until satisfactory.

In making elaborate titles on tracings, such as map titles, it is customary to draw the title on a separate piece of paper and slip it under the tracing to the desired position.

36. The Proportional Method.—On account of the varying widths of Roman letters it is sometimes difficult to space a word

to a given length by counting letters. Figure 87 illustrates the method of spacing by the principle of similar triangles. Suppose it is required to put the word ROMAN on the line and to the length *ab*. A line *ac* is drawn from *a* at any angle (say 30°), another line *de* drawn parallel to it and the word sketched in this space, starting at *a* and spacing each letter with reference to the one before it, allowing the word to end where it will. The end of the last letter (at *c*) is connected with *b* and lines parallel to *cb* drawn from each letter, thus dividing *ab* proportionally. The height *bf* is obtained from *ce* by the construction shown, after which the word can be sketched in its final position.

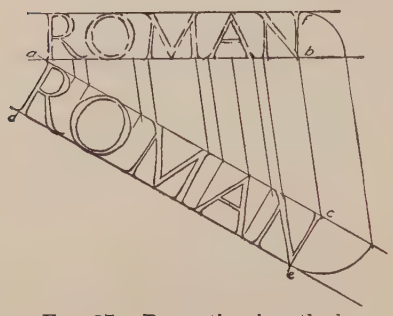

Fig. 87.—Proportional method.

Some examples of titles may be found on pages 217, 237, and 269.

37. Outlined Commercial Gothic.—Thus far the so-called "gothic" letter has been considered only as a single-stroke letter. For sizes larger than say five-sixteenths of an inch, or for bold face letters, it is drawn in outline and filled in solid. For a given size this letter is readable at a greater distance than any other style, hence would be used in any place where legibility is the principal requirement. The stems may be from one-tenth to one-fifth of the height, and much care must be exercised in keeping them to uniform width at every point on the letter. In inking a penciled outline keep the *outside* of the ink line on the pencil line, Fig. 88, otherwise the letter will be heavier than expected.

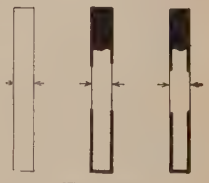

Fig. 88.

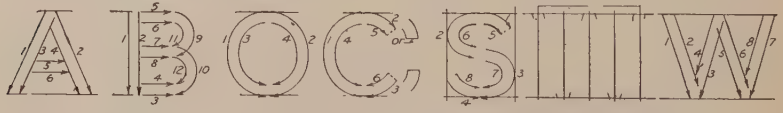

Fig. 89.—Typical construction for large commercial gothic.

Making two strokes in place of one, the general order and direction in penciling large commercial gothic letters is similar to the single stroke analysis, as shown in the typical examples of Fig.

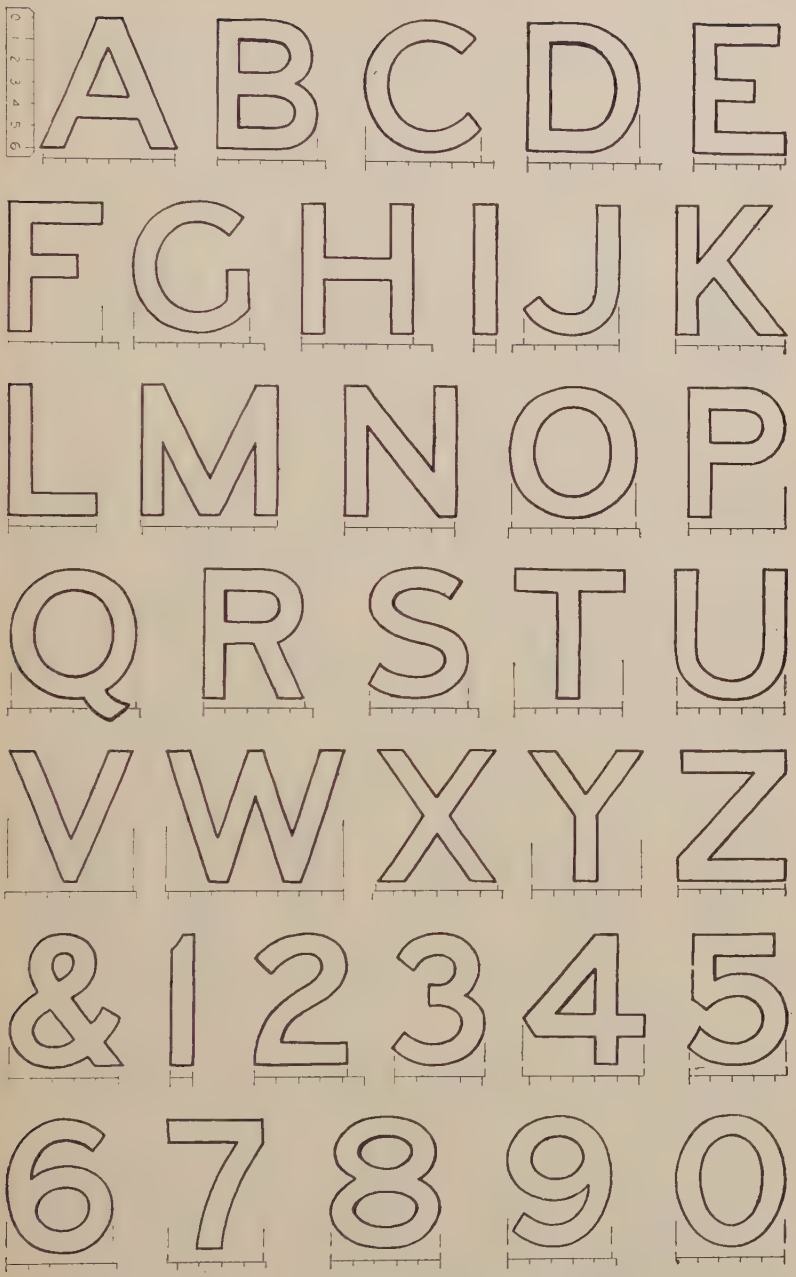

FIG. 90.—Large commercial gothic construction.

89. Free ends, such as on *C*, *G* and *S*, are cut off perpendicular to the stem. The stiffness of plain letters is sometimes relieved by finishing the ends with a slight spur as in Fig. 91. The complete alphabet in outline, with stems one-sixth of the height is given in Fig. 90. The same scale of widths may be used for drawing lighter face letters. Figure 91 illustrates a commercial gothic alphabet compressed to two-thirds the normal width. In

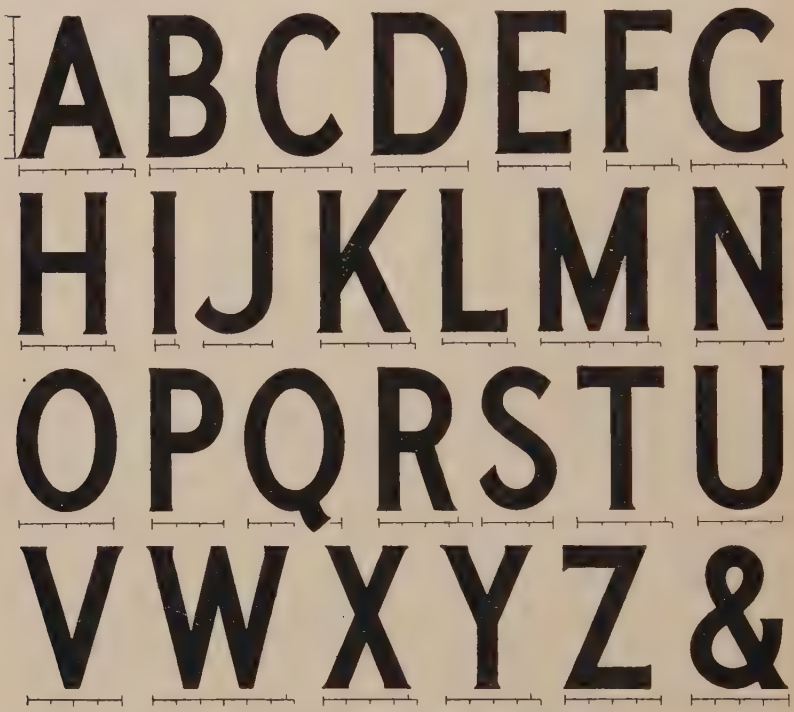

Fig. 91.—Compressed commercial gothic.

this figure the stems are drawn one-seventh of the height, but the scale is given in sixths as in Fig. 90.

38. The Roman Letter.—The Roman letter has been mentioned as the parent of all the styles, however diversified, which are in use today. Although there are many variations of it there may be said to be three general forms; (1) the early or classic, (2) the renaissance, (3) the modern. The first two are very similar in effect and the general term "Old Roman" is used for both.

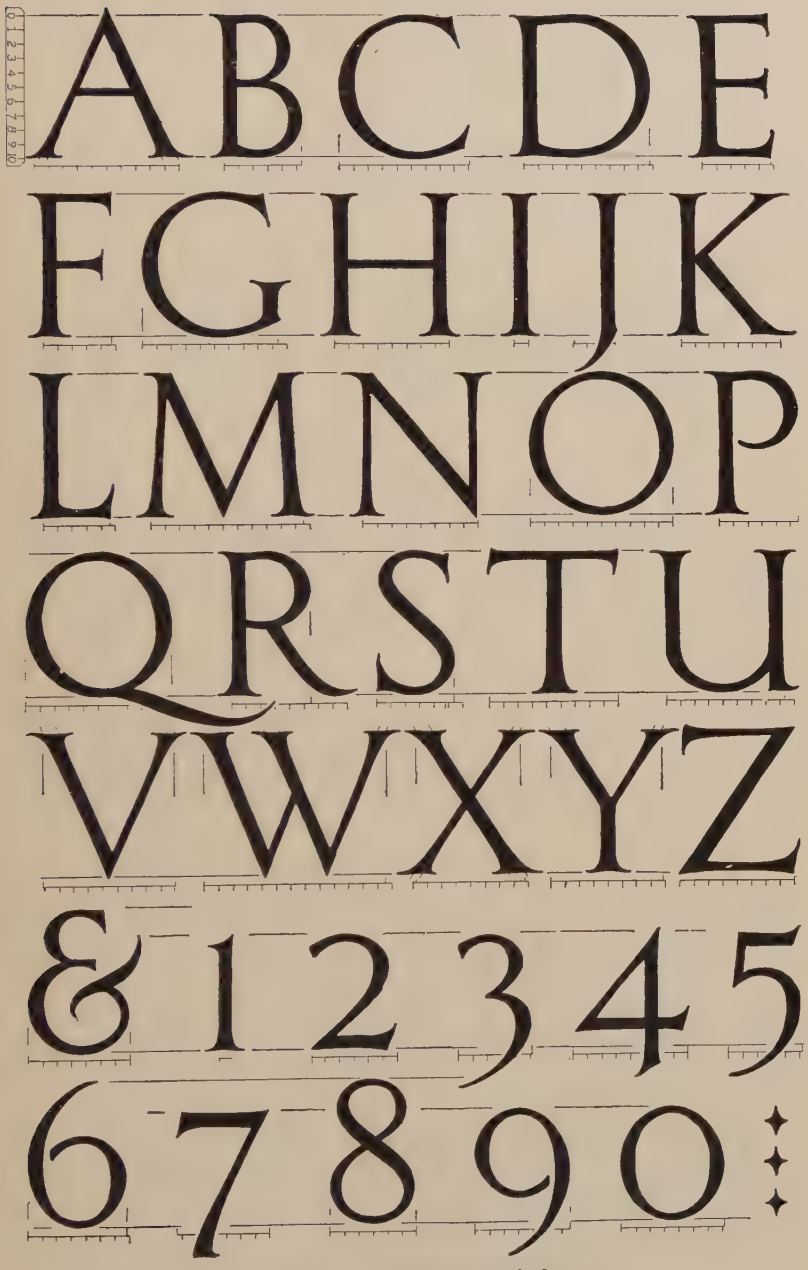

Fig. 92.—Old Roman capitals.

The Roman letter is composed of two weights of lines, corresponding to the down stroke and the up stroke of the broad reed pen with which it was originally written. It is an inexcusable fault to shade a Roman letter on the wrong stroke.

Rule for Shading.—All horizontal strokes are light. All vertical strokes are heavy except in *M N* and *U*. To determine the heavy stroke in letters containing slanting sides trace the shape of the letter from left to right in one stroke and note which

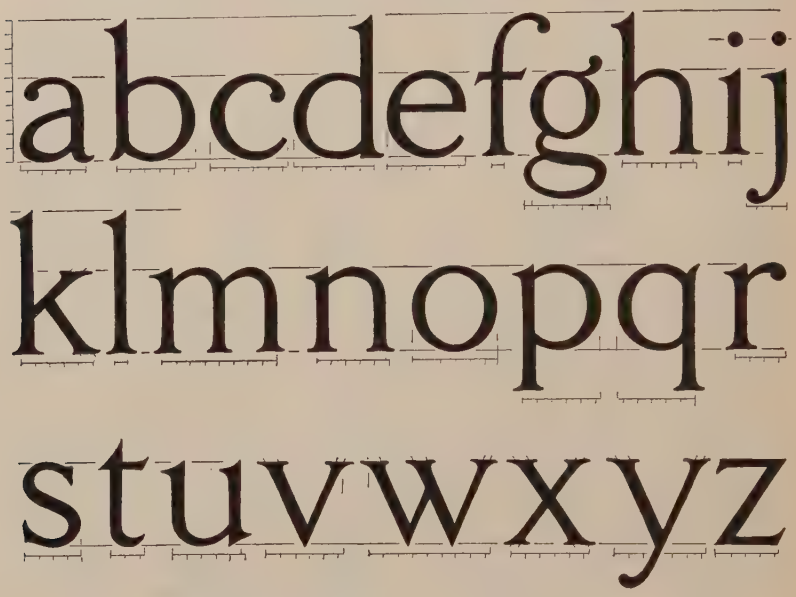

Fig. 93.—Old Roman lower-case.

lines were made downward. Figure 92 is an Old Roman alphabet with the width of the body stroke one-tenth of the height of the letter and the light lines slightly over one-half this width. For inscriptions and titles it is generally used in all capitals, but sometimes the lower-case, Fig. 93, is needed. This figure is drawn with the waist line six-tenths high and the stems one-twelfth of the cap. height.

The Old Roman is the architect's one general purpose letter. A single stroke adaptation of it, Fig. 94, is generally used on architectural working drawings.

39. Modern Roman.—Civil engineers in particular must be familiar with the Modern Roman as it is the standard letter for

ABCDEFGHIJKLMN
OPQRSTUVWXYZ&
abcdefghijklmnopqrstuvwxyz
1234567890
SINGLE STROKE ROMAN for
ARCHITECTURAL DRAWINGS
ABCDEFGHIJKLMMNOPQRSTUV
WXYZ& 1234567890
COMPRESSED FORM for LIMITED SPACE
INCISED
ABCDEFGHIJKLMNOPQRS
TUVWXYZ&1234567890
aabcdefghijklmnopqrstuvwxyz
Notes on drawings are easier to read when they are done in lower-case letters than when lettered in all capital letters.
SINGLE STROKE ITALIC may be much compressed when restricted space makes it necessary. This example is drawn at an angle of 75 degrees.

Fig. 94.—Single-stroke Roman and italic.

finished map titles and the names of civil divisions, as countries and cities. It is a difficult letter to draw and can only be mastered by careful attention to details. The heavy or "body

Fig. 95.—Modern Roman capitals.

strokes" are from one-sixth to one-eighth the height of the letter and the thin or "hair lines" comparatively very light. Figure 95 is an alphabet made on a scale whose unit is one-seventh of the

Fig. 96.—Modern Roman lower-case.

height. By dividing the required height into seven equal parts a small paper scale, as shown, may be made, to aid in penciling the letters. Modern lower-case, Fig. 96 is used on maps for

names of towns and villages. Notice the difference in the serifs of Figs. 96 and 93.

The order and direction of strokes used in drawing Roman letters is illustrated in the typical letters of Fig. 97. The serifs

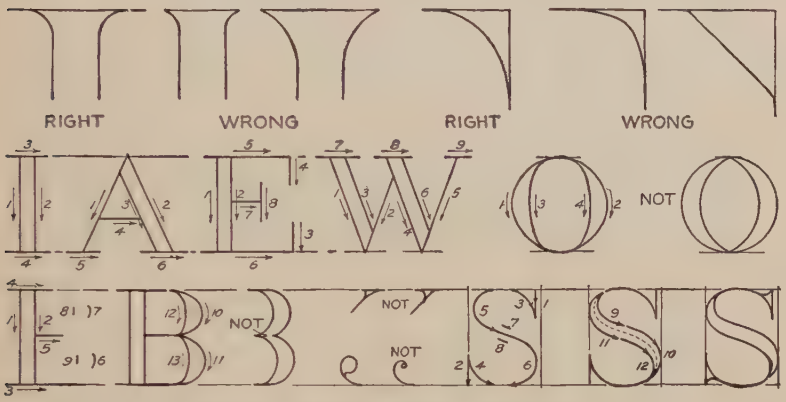

Fig. 97.—Modern Roman construction.

MAP SHOWING
IRON ORE DEPOSITS
IN THE
WESTERN STATES
SCALE-MILES 0 50 100 200 300 400

Fig. 98.—A Roman letter title.

EXTENDED ROMAN
BCGHJKLPQSUVW

COMPRESSED ROMAN-BHKTWG

Fig. 99.—Modern Roman, extended and compressed.

on the ends of the strokes extend one space on each side and are joined to the stroke by small fillets. Roman letters are spoiled oftener by poor serifs and fillets than in any other way. For letters smaller than one-fourth of an inch it is best to omit the

body stroke fillets altogether. It will be noticed that the curved letters are flattened slightly on their diagonals. A title in Roman letters is illustrated in Fig. 98.

The Roman letter may be extended or compressed, as shown in Fig. 99. For these a scale for widths may be made, longer or shorter than the normal scale. For example, the compressed letters of Fig. 99 are made with a scale three-fourths of the height divided into sevenths.

40. Inclined Roman.—Inclined letters are used for water features on maps. An alphabet of inclined Roman made to the

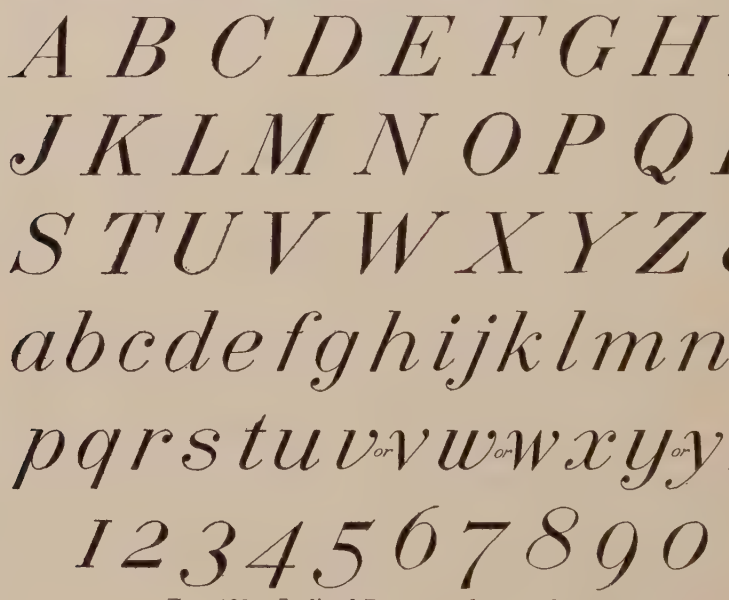

FIG. 100.—Inclined Roman and stump letters.

same proportions as the vertical of Fig. 95 is shown in Fig. 100. The slope may be from 65 to 75 degrees. Those shown are inclined two to five. The lower-case letters in this figure are known as stump letters. For small sizes their lines are made with one stroke of a fine flexible pen, while larger sizes are drawn and filled in.

EXERCISES

41. The following exercises are designed for a $5'' \times 7''$ space. The first ten, Series I and II, are for vertical letters, with the same specifications for Series III and IV, for inclined letters.

Series I. Single-stroke Vertical Caps

1. Large letters in pencil, for careful study of the shapes of the individual letters. Starting $^{9}/_{16}''$ from top border line draw guide lines for five lines of $^{3}/_{8}''$ letters, with clear distance between lines $^{1}/_{2}''$. Draw each of the straight line letters, *I H T L E F N Z X Y V A K M W* four times in pencil only,

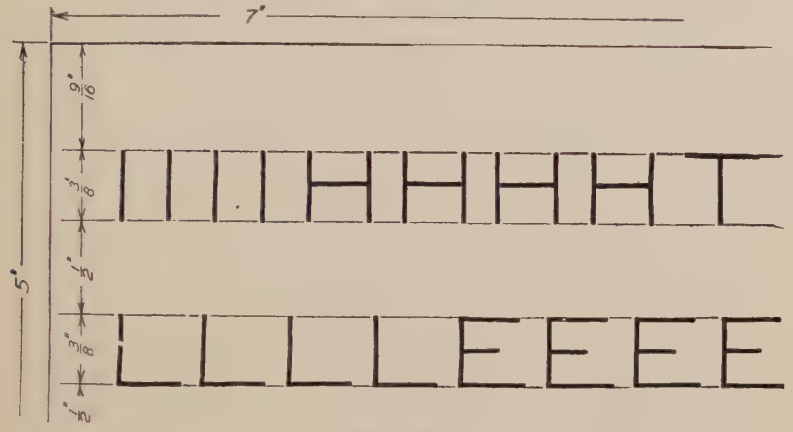

Fig. 101.

making a careful study of the letters with the order and direction of strokes as given in Figs. 61 to 65. Figure 101 is a full-sized reproduction of one corner of this exercise.

2. Same as Ex. 1, for curved line letters, *O Q C G D U J B P R S.* Study Figs. 66 to 69.

3. Same as Ex. 1, for figures and fractions, *3 8 6 9 2 5* & $^{1}/_{2}$ $^{3}/_{4}$ $^{5}/_{8}$ $^{7}/_{16}$ $^{9}/_{32}$. Study Figs. 69 to 72.

4. Composition. Same layout as for Ex. 1. Read paragraph on composition, then letter the following five lines in pencil. (1) WORD COMPOSITION, (2) TOPOGRAPHIC SURVEY, (3) TOOLS & EQUIPMENT (4) BRONZE BUSHING, (5) JACK RAFTER DETAIL

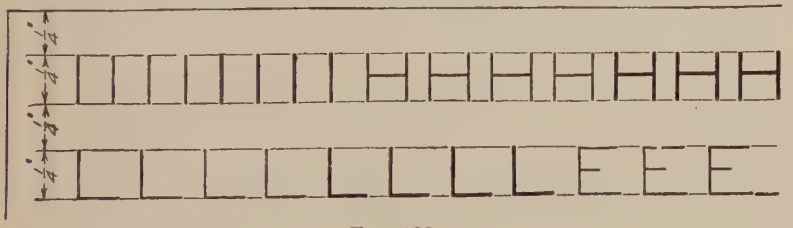

Fig. 102.

5. Quarter-inch vertical letters in pencil and ink. Starting $^{1}/_{4}''$ from top, draw guide lines for nine lines of $^{1}/_{4}''$ letters. Draw each letter in group order, first four times in pencil then four times directly in ink. Figure 102 shows one corner of this exercise.

6. One-eighth inch vertical letters. Starting ¼″ from top border draw guide lines for 18 lines of ⅛″ letters. Make each letter and numeral eight times directly in ink. Fill the lines remaining with a portion of the paragraph on composition on page 45.

Series II. Single-stroke Vertical Lower Case

7. Large letters in pencil, for use with ⅜″ caps. Starting ⅜″ from top draw guide lines for seven rows of letters, with cap line, waist line, base line and drop line for each. This can be done quickly by spacing ⅛″ uniformly down the sheet, bracketing the cap and base lines to avoid mistake. Make each letter of the alphabet four times in pencil only. Figure 103 shows one corner of this exercise.

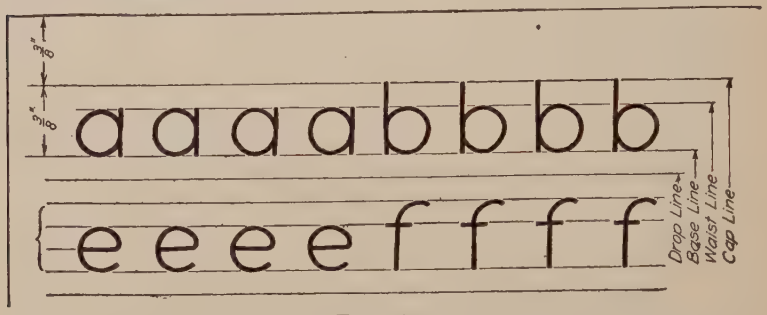

Fig. 103.

8. Composition. Same layout as Ex. 7. Letter a portion of the paragraph on composition, page 45.

9. Small vertical lower case, in pencil and ink, for use with 3/16″ caps. Starting ½″ from top draw cap, waist and base lines for 13 lines of letters

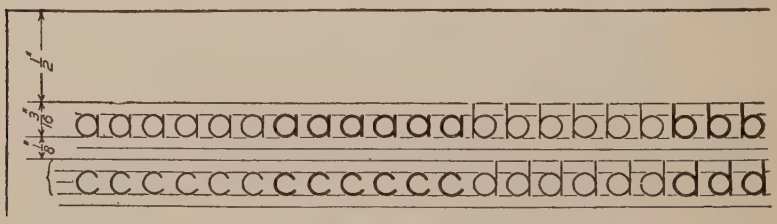

Fig. 104.

(Braddock or Ames No. 6 spacing). Make letter "a" six times in pencil, then six times in ink. Follow with each letter of the alphabet. Fig. 104.

10. Composition. Same spacing as Ex. 9. Letter the opening paragraph of this chapter in vertical lower case.

Series III. Single-stroke Inclined Capitals

11 to 16. Same spacing and specifications as Series I, Ex. 1 to 6, but for inclined letters. Study Fig. 78.

Series IV. Single-stroke Inclined Lower Case

17 to **20.** Same as Series II. Ex. 7 to 10, but for inclined letters. Study Figs. 78 to 82.

Series V. Heavy-stroke Commercial Gothic

21 and **22.** Lay out three lines of $1\frac{1}{16}''$ letters, with $\frac{5}{8}''$ between lines. Make the alphabet and numerals in group order.

Series VI. Roman Letters

23 and **24.** Lay out three lines of $1\frac{1}{8}''$ letters $\frac{3}{8}''$ apart. Make Old Roman alphabet in alphabetical order.

25. Lay out five lines $\frac{1}{2}''$ high $\frac{3}{8}''$ apart. Make Modern Roman alphabet and numerals.

26. Lay out six lines $\frac{3}{8}''$ high $\frac{3}{8}''$ apart. Make Italic and Stump letters and numerals.

Series VII. Titles

27. Design a title for the assembly drawing of a rear axle drawn to the scale of six inches to the foot, as made by the Locomobile Company of Bridgeport, Connecticut. The number of the drawing is C 27536. Space allowed $3'' \times 5''$. See page 236 for contents of a working drawing title.

28. Design a title for the front elevation of a power house drawn to quarter-inch scale by G. W. Bell, architect, for the Citizens Light and Heat Company of North Adams, Michigan. See page 343 for contents of an architectural title.

29. Design the title for a map of a portion of Washington County, drawn to a scale of two inches to one mile, showing the properties of the Adams Lumber Company of Jefferson, Florida.

CHAPTER V

Applied Geometry

42. With the aid of a straight-edge and compasses all pure geometrical problems may be solved. The principles of geometry are constantly used in mechanical drawing, but as the geometrical solution of problems and construction of figures differs in many cases from the draftsman's method, equipped as he is with instruments for gaining time and accuracy, such problems are not included here. For example, there are several geometrical methods of erecting a perpendicular to a given line; in his ordinary practice the draftsman equipped with T-square and triangles uses none of them. The application of these geometrical methods might be necessary occasionally in work where the usual drafting instruments could not be used, as for example in laying out full size sheet metal patterns on the floor. It is assumed that students using this book are familiar with the elements of plane geometry and will be able to apply their knowledge. If a particular problem is not remembered, it may readily be referred to in any of the standard handbooks. There are some constructions however with which the draftsman should be familiar as they will occur more or less frequently in his work. The constructions in this chapter are given on this account, and for the excellent practice they afford in the accurate use of instruments as well.

As an aid in recalling the names of various geometrical figures see page 75 at the end of this chapter.

43. To Divide a Line.—Geometrical Method. Fig. 105. To divide the line $A\ B$ into (say) five equal parts, draw any line BC indefinitely, on it measure or step off five divisions of convenient length, connect the last point with A, draw lines through the points parallel to $C\ A$ intersecting $A\ B$, using triangle and straight edge as shown in Fig. 22, page 18.

Scale Method.—In the application of the above principle the draftsman generally prefers the scale method, first drawing a perpendicular AC from A, then placing a scale so that five convenient equal divisions are included between B and the

perpendicular, as in Fig. 106. Perpendiculars drawn with triangle and T-square through the points marked will divide the line AB as required. Figure 107 illustrates an application in laying off stair risers.

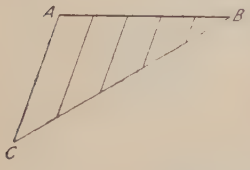

Fig. 105.—To divide a line.

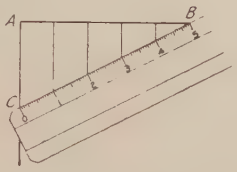

Fig. 106.—Scale method.

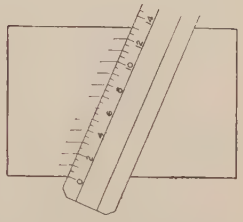

Fig. 107.—Scale method.

This method may be used for dividing a line into any proportional parts.

44. To Construct a Triangle Having Given the Three Sides.—Fig. 108. Given the lengths A, B and C. Draw one side A in the desired position. With its ends as centers and radii B and C draw two intersecting arcs as shown.

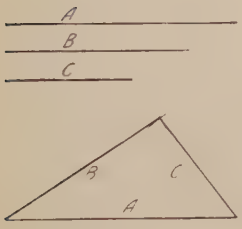

Fig. 108.—To construct a triangle.

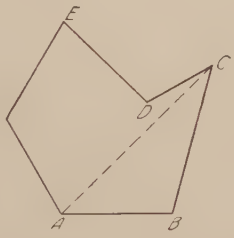

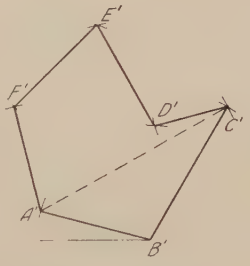

Fig. 109.—To transfer a polygon.

45. To Transfer a Polygon to a New Base.—Fig. 109. Given polygon $ABCDEF$ and new position of base $A'B'$. Consider each point as the vertex of a triangle whose base is AB. With centers A' and B' and radii AC and BC describe intersecting arcs, locating the point C'. Similarly with radii AD and BD locate the point D'. Connect $B'C'$ and $C'D'$ and continue the operation, always using A and B as centers.

Box or Offset Method.—Fig. 110. Enclose the polygon in a rectangular "box." Draw the box on the new base (method of

Fig. 23), locate the points $ABCEF$ on it; locate point D by rectangular coordinates as shown.

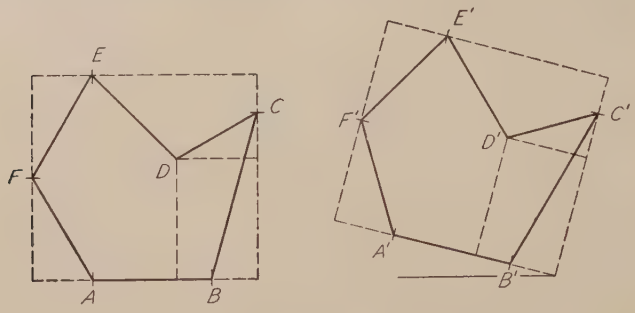

Fig. 110.—Box or offset method.

46. To Construct a Regular Hexagon.—Fig. 111. Given the distance across corners AB. Draw a circle on AB as a diameter. With the same radius and A and B as centers draw arcs and connect the points.

Second method, without using compasses. Draw lines with the 30°–60° triangle in the order shown in Fig. 112.

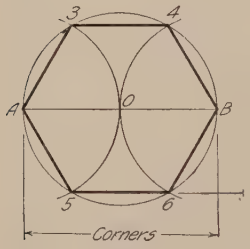

Fig. 111.—Hexagon.

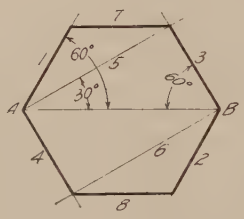

Fig. 112.—Hexagon.

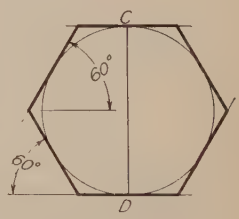

Fig. 113.—Hexagon.

Third method. When the short diameter is given draw a circle on the short diameter and with the 30°–60° triangle draw tangents to it as in Fig. 113.

47. To Inscribe a Pentagon in a Circle.—Fig. 114. Draw a diameter AB and a radius OC perpendicular to it. Bisect OB. With this point D as center and a radius DC draw arc CE. With center C and radius CE draw arc EF. CF is the side of the pentagon.

48. To Draw a Regular Octagon in a Square.—Fig. 115. Draw the diagonals of the square. With the corners of the

square as centers and radius of half the diagonal draw arcs intersecting the sides of the square, and connect these points.

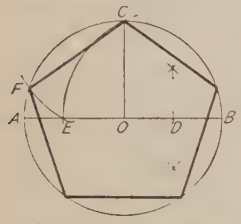

Fig. 114.—Pentagon.

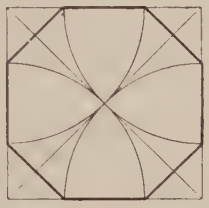

Fig. 115.—Octagon.

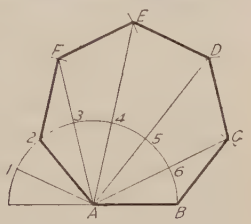

Fig. 116.—Polygon.

49. To Construct a Polygon, One Side Given.—Fig. 116. To draw a polygon of any number of sides (say seven). With the side AB as a radius and A as center draw a semicircle and divide it into seven parts. Through the second division from the left draw radial line $A2$. Through points 3, 4, 5, 6, extend radial lines as shown. With AB as radius and B as center cut line $A6$ at C. With C as center cut $A5$ at D, and so on at E and F. Connect the points, *or* after $A2$ is found, draw the circumscribing circle.

50. To Draw a Circular Arc through Three Given Points.—Fig. 117. Given A, B and C. Draw AB and BC. The intersection of the perpendicular bisectors of these lines will be the center of the required circle.

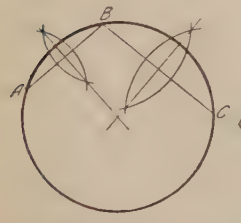

Fig. 117.—Center of arc.

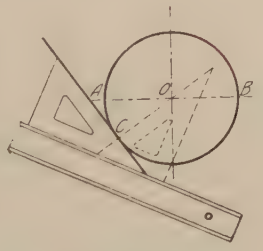

Fig. 118.—Drawing a tangent.

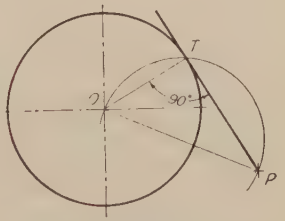

Fig. 119.—Tangent from point outside.

51. Tangents.—One of the most frequent geometrical operations in drafting is the drawing of circle arcs tangent to straight lines or other circles. These should be constructed accurately and on pencil drawings which are to be inked or traced the points of tangency should be located by short cross-marks to show the stopping points for the ink lines. The method of finding these points is indicated in the following constructions.

52. To Draw a Tangent to a Circle.—Fig. 118. Given the arc ACB, to draw a tangent at the point C on the arc. Arrange a triangle in combination with the T-square (or another triangle) so that its hypotenuse passes through center O and point C. Holding the T-square firmly in place turn the triangle about its square corner and move it until the hypotenuse coincides with C giving the required tangent, perpendicular to the normal OC. (For small constructions, or with a large triangle this may be done a little quicker by setting the hypotenuse of the triangle on the T-square as in Fig. 23B.)

53. To Draw a Tangent to a Circle from a Point Outside.—Fig. 119. Connect the point with the center of the circle. On this line OP as a diameter draw a semi-circle. Its intersection with the given circle is the point of tangency. (Prove.)

54. To Draw an Arc Tangent to Two Lines.—Fig. 120. Given the lines AB and CD, and radius R. A line parallel to AB at the distance R from it will be the locus of the centers of all circles of radius R tangent to AB. Its intersection with a similar locus

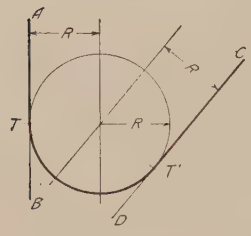

FIG. 120.—Tangent arc.

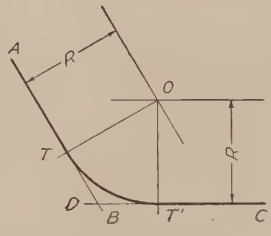

FIG. 121.—Tangent arc.

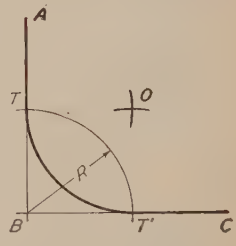

FIG. 122.—Tangent arc.

parallel to CD will be the center of the required arc. Find the points of tangency by drawing perpendiculars from O to AB and CD. Figure 121 is the same construction with an obtuse angle. For a right angle, Fig. 122, a quicker construction is to draw an arc of radius R with B as center, cutting AB and BC at T and T'. With T and T' as centers and same radius draw arcs intersecting at O, the center for the required arc.

55. To Draw a Circle of Radius R Tangent to a Given Circle and Line.—Fig. 123. Let AB be the given line and R_1 the radius of the given circle. Draw a line CD parallel to AB at a distance R from it. With O as a center and radius $R + R_1$ swing an arc intersecting CD at X, the desired center. The tangent point for AB will be on a perpendicular to AB from X;

the tangent point for the two circles on a line joining their centers X and O. Note that when two circles are tangent to each other the point of tangency *must* be on the line through their centers.

56. To Draw a Circle of Radius R Tangent to Two Given Circles.—Fig. 124. Let R_1 and R_2 be the radii of the given circles having centers O and P respectively. With O as a center and a radius $R + R_1$ describe an arc. Also with P as a center and a radius $R + R_2$ swing another arc intersecting the first arc at Q which is the center sought. Mark the tangent points by a cross-mark in line with OQ and QP.

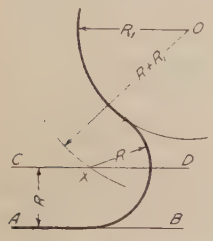

FIG. 123.—Tangent arc.

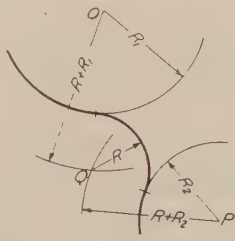

FIG. 124.—Tangent arc.

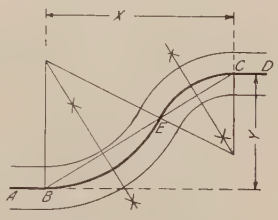

FIG. 125.—Ogee curve.

57. To Draw a Reverse or "Ogee" Curve.—Fig. 125. Given two parallel lines AB and CD. Join B and C by a straight line. Erect perpendiculars at B and C. Any arcs tangent to the lines AB and CD at B and C must have their centers on these perpendiculars. On line BC assume point E through which the curve is desired to pass, and bisect BE and EC by perpendiculars. Any arc to pass through B and E must have its center on a perpendicular at the middle point. The intersection therefore of these perpendiculars with the two first perpendiculars will be the centers for arcs BE and EC. This line might be the center line for a curved road or pipe. The construction may be checked by drawing the line of centers which *must* pass through E.

58. To Lay Off on a Straight Line the Approximate Length of a Circle Arc.—Fig. 126. Given the arc AB. At A draw the tangent AD and chord BA produced. Lay off AC equal to half the chord AB. With center C and radius CB draw an arc intersecting AD at D, then AD will be equal in length to the arc AB (very nearly).[1] If the given arc is between 45° and 90° a

[1] In this (Professor Rankine's) solution, the error varies as the fourth power of the subtended angle. At 60 degrees the line will be $\frac{1}{900}$ part short, while at 30 degrees it will be only 1/14,400 part short.

closer approximation will result by making AC equal to the chord of half the arc instead of half the chord of the arc.

The usual way of rectifying an arc is to set the dividers to a space small enough as practically to coincide with the arc. Starting at B step along the arc to the point nearest A, and without lifting the dividers step off the same number of spaces on the tangent as shown in Fig. 127.

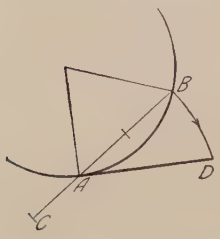

Fig. 126.—Length of arc.

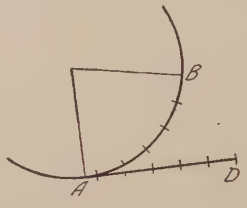

Fig. 127.—Length of arc.

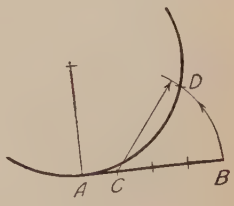

Fig. 128.—Length on arc.

59. To Lay Off on a Given Circle Arc the Approximate Length of a Straight Line.—Fig. 128. Given the line AB, tangent to the circle at A. Lay off AC equal to one-fourth AB. With C as center and radius CB draw an arc intersecting the circle at D. The arc AD is equal in length to AB (very nearly).[1] If greater than 60° solve for one-half AB.

60. Conic Sections.—In cutting a right circular cone by planes at different angles four curves called the *conic sections* are

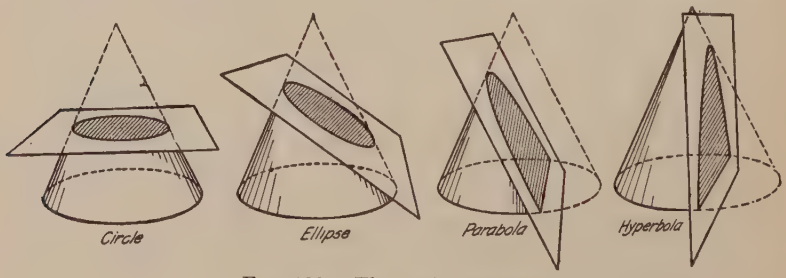

Fig. 129.—The conic sections.

obtained, Fig. 129. These are the *circle*, cut by a plane perpendicular to the axis; the *ellipse*, cut by a plane making a greater angle with the axis than the elements do; the *parabola*, cut by a plane making the same angle with the axis as the elements do;

[1] In this (Professor Rankine's) solution, the error varies as the fourth power of the subtended angle. At 60 degrees the line will be $\frac{1}{900}$ part short, while at 30 degrees it will be only 1/14,400 part short.

the *hyperbola*, cut by a plane making a smaller angle than the elements do. These curves are studied mathematically in analytic geometry but may be drawn without a knowledge of their equations by knowing something of their characteristics.

61. The Ellipse.—Fig. 130. An ellipse is a curve generated by a point moving so that the sum of the distances from two fixed points, (F_1, F_2) called the foci, is a constant, and is equal to the longest diameter, or major axis (AB).

The minor axis or short diameter (DE), is the line through the center perpendicular to the major axis. The foci may be determined by cutting the major axis with an arc having its center at

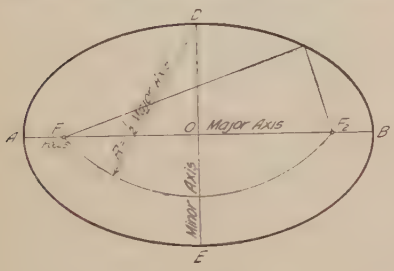

Fig. 130.—The ellipse.

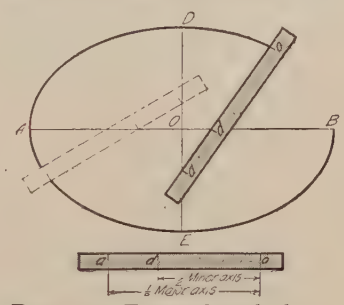

Fig. 131.—Trammel method.

one end of the minor axis and a radius equal to one-half the major axis.

As an ellipse is the projection of a circle viewed obliquely it is met with in practice oftener than the other conics, aside from the circle, and draftsmen should be able to construct it readily, hence several methods are given for its construction, both as a true ellipse, and as an approximate curve made by circle arcs. In the great majority of cases when this curve is required its long and short diameters, *i.e.*, its major and minor axes are known.

62. Ellipse—Pin and String Method.—This well-known method sometimes called the "gardener's ellipse" is often used for large work, and is based on the mathematical principle of the ellipse. Drive pins at the points D, F_1, F_2, Fig. 130, and tie an inelastic thread or cord tightly around the three pins. If the pin D be removed and a marking point moved in the loop, keeping the cord taut, it will describe a true ellipse.

63. Ellipse—Trammel Method.—Fig. 131. On the straight edge of a strip of paper, thin cardboard or sheet of celluloid, mark the distance *ao* equal to one-half the major axis and *do* equal to

one-half the minor axis. If the strip be moved keeping a on the minor axis and d on the major axis, o will give points on the ellipse. This method will be found very convenient, as no construction is required, but for accurate results great care should be taken to keep the points a and d exactly on the axes. The ellipsograph, Fig. 708, is constructed on the principle of this method.

64. Ellipse—Parallelogram Method.—Figs. 132 and 133. This method may be used with either the major and minor axes or

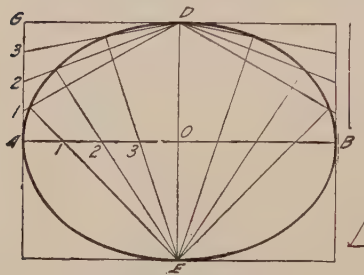

Fig. 132.—Parallelogram method.

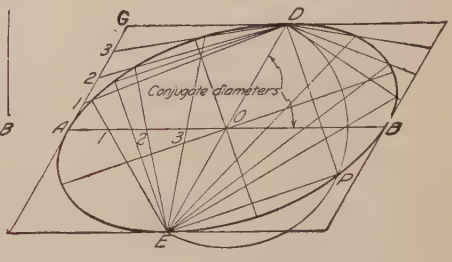

Fig. 133.—Parallelogram method.

with any pair of conjugate diameters. On the diameters construct a parallelogram. Divide AO into any number of equal parts and AG into the same number of equal parts, numbering the points from A. Through these points draw lines from D and E as shown. Their intersections will be points on the curve.

To Determine the Major and Minor Axes of an Ellipse, the Conjugate Axes Being Given.—Fig. 133. The property of conjugate diameters is that each is parallel to the tangent to the curve at the extremities of the other. At O draw a semicircle with radius OE. Connect the point of intersection P of this circle and the ellipse with D and E. The major and minor axes will be parallel to the chords DP and EP.

65. Ellipse—Concentric Circle Method.—Fig. 134. This is perhaps the most accurate method for determining points on the curve. With O as center describe circles on the two diameters. From a number of points on the outer circle as P and Q draw radii OP, OQ, etc., intersecting the inner circle at P', Q', etc. From P and Q draw lines parallel to OD, and from P' and Q' lines parallel to OB. The intersection of the lines through P and P' gives one point on the ellipse, the intersection of the lines through Q and Q' another point, and so on. For accuracy the points

should be taken closer together toward the major axis. The process may be repeated in the four quadrants and the curve sketched in lightly freehand, or one quadrant only may be constructed and the remaining three repeated by marking the French curve.

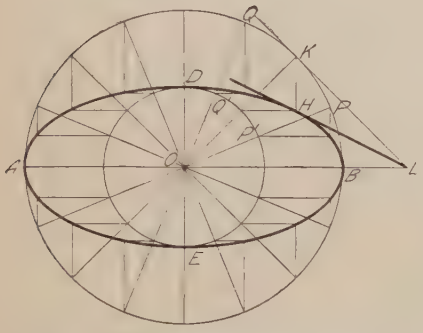

Fig. 134.—Concentric circle method.

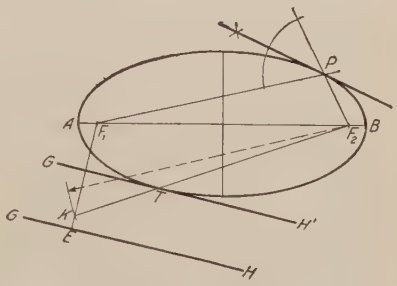

Fig. 135.—Tangents.

66. To Draw a Tangent to an Ellipse. 1. *At a point "P" on the Curve.*—Fig. 135. Draw lines from the point to the foci. The line bisecting their exterior angle is the required tangent.

2. When the ellipse has been drawn by the concentric circle method, Fig. 134, a tangent at any point H may be drawn by dropping a perpendicular from the point to the outer circle at K and drawing the auxiliary tangent KL cutting the major axis at L. From L draw the required tangent LH.

A Tangent Parallel to a Given Line GH.—Fig. 135. Draw $F_1 E$ perpendicular to GH. With F_2 as center and radius AB draw an arc cutting $F_1 E$ at K. The line $F_2 K$ cuts the ellipse at the required point of tangency T, through which draw the required tangent parallel to GH.

A Tangent from a Point Outside.—Fig. 136. Find the foci F_1 *and* F_2. With given point P as center and a radius PF_2 draw an arc $R\ F_2\ Q$. With F_1 as center and a radius AB cut this arc at Q and R. Connect QF_1 and RF_1. The intersections of these lines with the ellipse at T_1 and T_2 will be the tangent points of tangents to the ellipse from P. (Prove.)

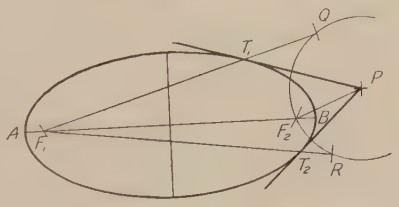

Fig. 136.—Tangent from point outside.

67. Approximate Ellipse with Four Centers.—Fig. 137. Join A and D. Lay off DF equal to AO minus DO. Bisect AF by a perpendicular which will cross AO at G and intersect DE produced (if necessary) at H. Make OG' equal to OG, and

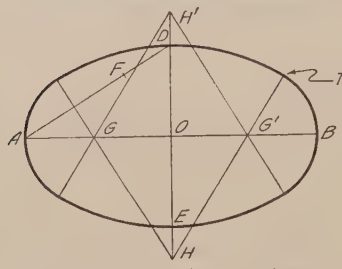

FIG. 137.—Approximate ellipse.

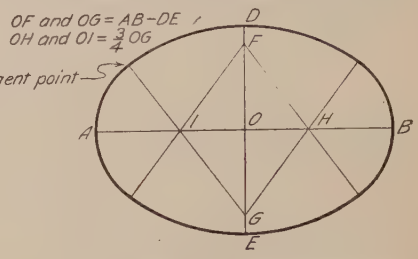

FIG. 138.—Approximate ellipse.

OH' equal to OH. Then G, G', H and H' will be centers for four circle arcs approximating the ellipse. Draw arcs G and G' first, then H and H' which may have to be shifted slightly to fit perfectly.

Another method is shown in Fig. 138. This should be used only when the minor axis is at least two-thirds the major axis.

68. Approximate Ellipse with Eight Centers.—Fig. 139. When a closer approximation is desired, the eight-centered ellipse, known in masonry as the "five-centered arch" may be constructed. Draw the rectangle $AFDO$. Draw the diagonal AD and draw from F a line perpendicular to it intersecting the extension of the minor axis at H. Lay off OK equal to OD and

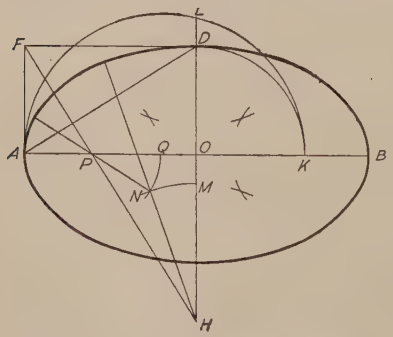

FIG. 139.—Approximate ellipse.

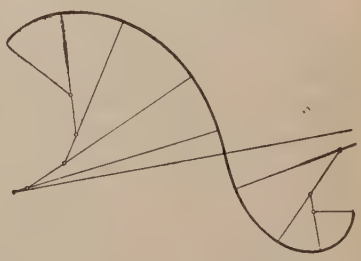

FIG. 140.—Curve inked with circle arcs.

on AK as a diameter draw a semi-circle intersecting the extension of the minor axis at L. Make OM equal LD. With center H and radius HM draw the arc MN. With A as center and radius OL intersect AB at Q. With P as center and radius PQ intersect

the arc MN at N, then P, N and H are centers for one-half of the semi-ellipse or "five-centered oval." This method is based on the principle that the radius of curvature at the end of the minor axis is the third proportional to the semi-minor and semi-major axes, and similarly at the end of the major axis is the third proportional to the semi-major and semi-minor axes. The intermediate radius found is the mean proportional between these two radii.

It should be noted that an ellipse is changing its radius of curvature at every point, and that these approximations are not ellipses but simply curves of the same general shape.

69. Any non-circular curve may be approximated by tangent circle arcs, selecting a center by trial, drawing as much of an arc as will practically coincide with the curve, then changing the center and radius for the next portion, remembering always that *if arcs are to be tangent, their centers must lie on the common normal at the point of tangency.* Many draftsmen prefer to ink curves in this way rather than to use irregular curves. Figure 140 illustrates the construction.

70. The Parabola.—The parabola is a curve generated by a point so moving that its distance from a fixed point, called the focus, is always equal to its distance from a straight line, called the directrix. Among its practical applications are included

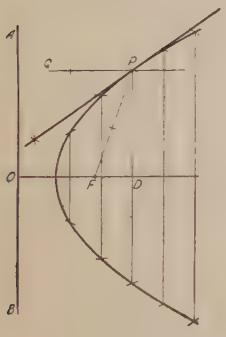

Fig. 141.

Fig. 142.

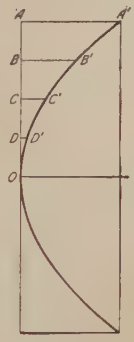

Fig. 143.

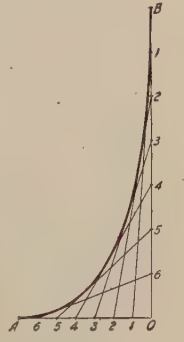

Fig. 144.

Methods of drawing the parabola.

search lights and parabolic reflectors, some loud speakers, road sections, certain bridge arches, etc.

When the focus F and the directrix AB are given, Fig. 141, draw the axis through F perpendicular to AB. Through any point D on the axis draw a line parallel to AB. With the distance

DO as a radius, and *F* as a center draw an arc intersecting the line, thus locating a point *P* on the curve. Repeat the operation with as many lines as needed.

To Draw a Tangent at Any Point P.—Draw *PQ* parallel to the axis and bisect the angle *FPQ*.

71. Parabola—Parallelogram Method.—Usually when a parabola is required, the enclosing rectangle, *i.e.*, its width and depth (or span and rise), given, as in Fig. 142. Divide *OA* and *AB* into the same number of equal parts. From the divisions on *AB* draw lines converging at *O*. The intersections of these with the corresponding lines from the divisions on *OA* drawn parallel to the axis will be points on the curve.

72. Parabola—Offset Method.—Given the enclosing rectangle, the parabola (Fig. 143) may be plotted by computing the offsets from the line *OA*. These offsets vary as the square of their distances from *O*. Thus, if *OA* be divided into four parts *DD'* will be one-sixteenth of *AA'*; *CC'* (since it is twice as far from *O* as *DD'* is) will be four-sixteenths of *AA'*, and *BB'* nine-sixteenths. If *OA* were divided into five parts the relations would be $\frac{1}{25}$, $\frac{4}{25}$, $\frac{9}{25}$, $\frac{16}{25}$, the denominator being in each case the square of the number of divisions. This method is the one generally used by civil engineers in drawing parabolic arches.

73. Parabolic Envelope.—Fig. 144. This method of drawing a pleasing curve is often used in machine design. Divide *OA* and *OB* into the same number of equal parts numbering from *O* and *B*. Connect corresponding numbers. The tangent curve will be a portion of a parabola although its axis is not parallel to either ordinate.

74. The Hyperbola.—The hyperbola is a curve generated by a point moving so that the difference of its distances from two fixed points, called the foci, is a constant. (Compare this definition with that of the ellipse.)

To draw a hyperbola when the foci F_1F_2 and the transverse axis *AB* (constant difference) are given, Fig. 145. With F_1 and F_2 as centers, and any radius greater than $F_1 B$ draw arcs, as $F_1 P$. With the same centers and radius $F_1 P$ minus *AB* intersect these arcs, giving points on the curve. To draw a tangent as at *P*, bisect the angle $F_1 PF_2$.

75. Equilateral Hyperbola.—The common case of the hyperbola of practical interest to the engineer is the equilateral or rectangular hyperbola on its asymptotes, as representing the

relation between the pressure and volume of steam or gas expanding under the law $pv = c$.

To Draw the Equilateral Hyperbola.—Fig. 146. Let OA and OB be the asymptotes and P any point on the curve (this might be the point of cut-off on an indicator diagram). Draw PC and PD.

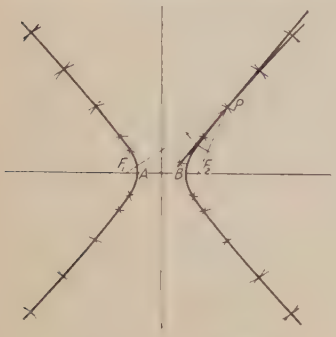

Fig. 145.—Hyperbola.

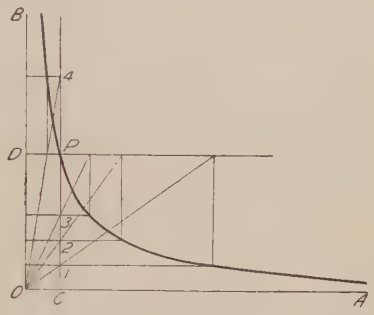

Fig. 146.—Equilateral hyperbola.

Mark any points, 1, 2, 3, 4, on PC, through these points draw lines parallel to OA and through the same points lines to O. From the intersection of these lines with PD draw perpendiculars. The intersections of these perpendiculars with the corresponding horizontal lines give points on the curve.

76. Cycloidal Curves.—A cycloid is the curve generated by the motion of a point on the circumference of a circle rolled along a straight line. If the circle be rolled on the outside of another circle the curve is called an epicycloid; when rolled inside it is called a hypocycloid. These curves are used in drawing one system of gear teeth.

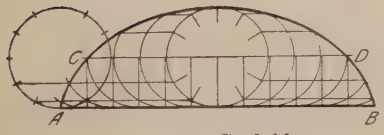

Fig. 147.—Cycloid.

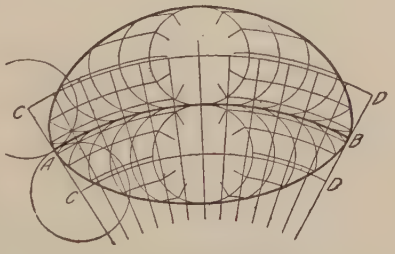

Fig. 148.—Epicycloid and hypocycloid.

To Draw a Cycloid.—Fig. 147. Divide the rolling circle into a convenient number of parts (say 12), lay off the rectified length of the circumference, with these divisions, on the tangent AB. Draw through C the line of the centers CD and project the

division points up to this line by perpendiculars. On these points as centers draw circles representing different positions of the rolling circle, and project across on these circles in order, the division points of the original circle. These intersections will be points on the curve. The epicycloid and hypocycloid may be drawn similarly as illustrated in Fig. 148.

77. The Involute.—An involute is the spiral curve traced by a point on a cord unwinding from around a polygon or circle. Thus the involute of any polygon may be drawn by extending its sides, as in Fig. 149, and with the corners of the polygon as successive centers drawing arcs terminating on the extended sides.

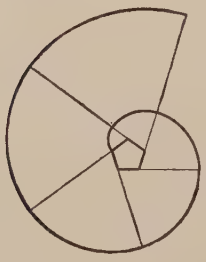

Fig. 149.—Involute of a pentagon.

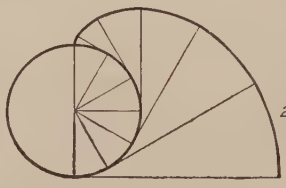

Fig. 150.—Involute of a circle.

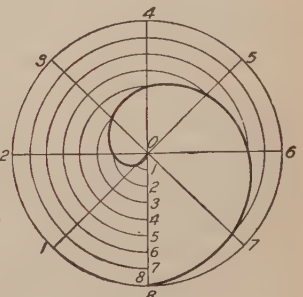

Fig. 151.—Spiral of Archimedes.

In drawing a spiral in design, as for example in bent iron work, the easiest way is to draw the involute of a square.

A circle may be conceived as a polygon of an infinite number of sides. Thus to draw the involute of a circle, Fig. 150, divide it into a convenient number of parts, draw tangents at these points, lay off on these tangents the rectified lengths of the arcs from the point of tangency to the starting point, and connect the points by a smooth curve. It is evident that the involute of a circle is the limiting case of the epicycloid, the rolling circle becoming of infinite diameter. It is the basis for the involute system of gearing.

78. The Spiral of Archimedes is a curve generated by a point moving uniformly along a line while the line revolves through uniform angles.

To Draw a Spiral of Archimedes making one turn in a given circle, Fig. 151, divide the circumference into a number of equal parts, drawing the radii and numbering them. Divide the radius

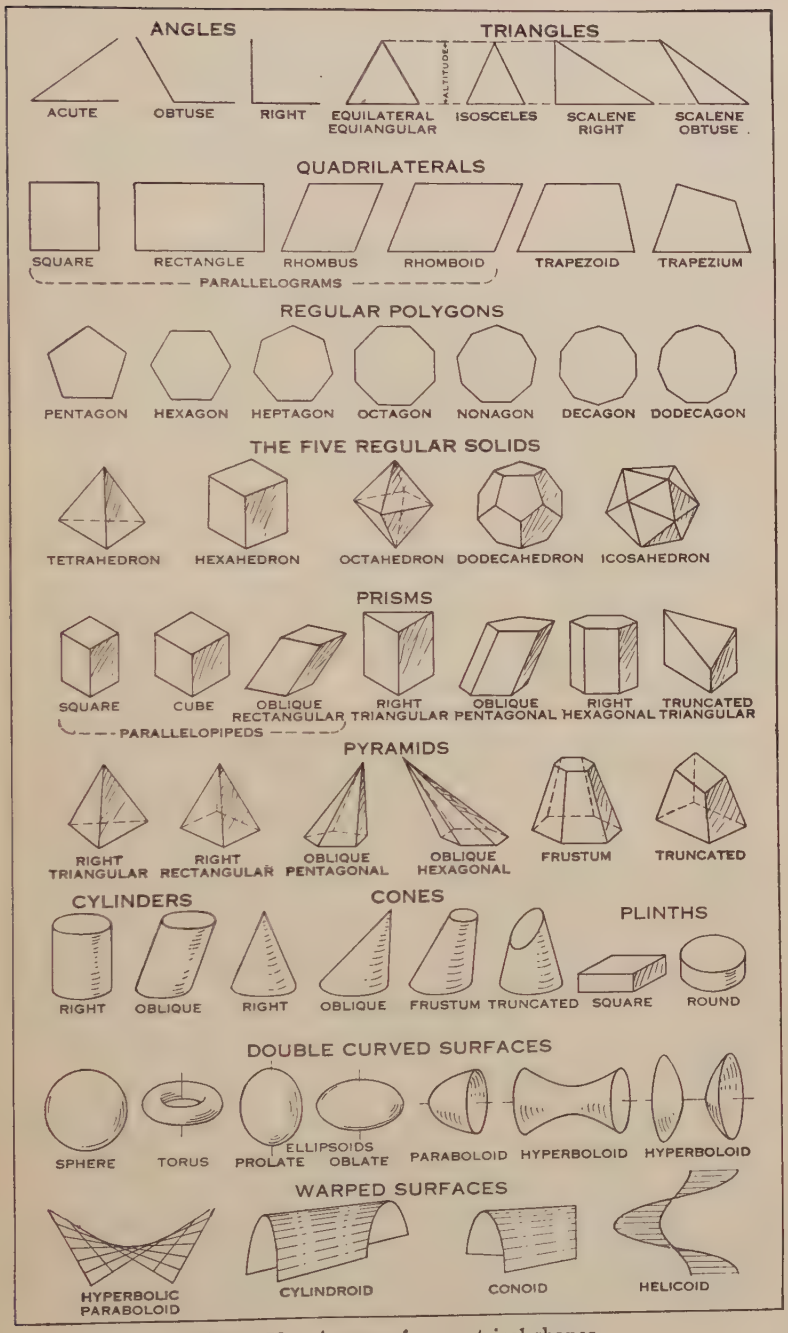

FIG. 152.—A page of geometrical shapes.

O-8 into the same number of equal parts, numbering from the center. With *O* as a center draw concentric arcs intersecting the radii of corresponding numbers, and draw a smooth curve through these intersections. This is the curve of the heart cam, for converting uniform rotary motion into uniform reciprocal motion.

PROBLEMS

79. To be of value both as drawing exercises and as solutions, geometrical problems should be worked very accurately. The pencil must be kept very sharp, and comparatively light lines used. A point should be located by two intersecting lines, and the length of a line by two short dashes crossing the given line.

The following problems (except 25 and 26) are dimensioned to fit a space not over 5″ × 7″.

1. Near the center of the space draw a horizontal line $4\frac{1}{2}$″ long. Divide it into 7 equal parts by the method of Fig. 106.

2. Draw the diagonal of a 4″ × 5″ rectangle. Divide it into 9 equal parts.

3. Draw a vertical line 1″ from left edge of space and $3\frac{7}{8}$″ long. Divide it into parts proportional to 1, 3, 5 and 7.

4. Same as Prob. 3, but divide into parts proportional to 1, 2, 3, 4, 2.

5. Draw a horizontal line $\frac{3}{4}$″ above bottom of space and $4\frac{1}{2}$″ long. On this line as a base construct a triangle having sides of $5\frac{5}{8}$″ and $3\frac{3}{8}$″. On the same base construct a triangle having sides of 4″.

6. Near the center of the space draw a vertical line $2\frac{1}{2}$″ long, lower end $\frac{1}{2}$″ from bottom of space. Starting with this line construct triangles on each side of it having remaining sides of $2\frac{1}{2}$″ and $4\frac{11}{32}$″.

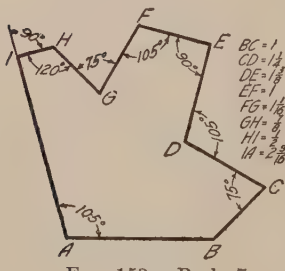

Fig. 153.—Prob. 7.

7. Construct a polygon as shown in Fig. 153, drawing the line *AB* of indefinite length $\frac{5}{8}$″ above bottom of space. From *B* draw and measure *BC*. Proceed in the same way for the remaining sides. The angles may all be obtained by proper combinations of the two triangles.

8. Draw line *AB* making an angle of 15° with the horizontal. With this line as a base transfer the polygon of Fig. 153.

9. Draw a regular hexagon having a distance across corners of 4″.

10. Draw a regular hexagon one side of which is $1\frac{7}{8}$″.

11. Draw a regular hexagon, short diameter $3\frac{3}{8}$″.

12. Draw a regular pentagon in a 4″ circle.

13. Draw a regular octagon, distance between parallel sides $3\frac{11}{16}$″.

14. Draw a regular octagon, one side of which is $1\frac{1}{4}$″.

15. From the upper left-hand corner of the space draw a 45° line. From the upper right-hand corner draw a line making 60° with the horizontal. Draw a circle having a radius of $1\frac{1}{4}''$ tangent to the two lines.

16. Locate three points as follows: Point *A* $3\frac{1}{2}''$ from left edge of space and $\frac{3}{4}''$ from top of space; *B* $5\frac{1}{2}''$ from left edge and $2\frac{1}{4}''$ from top; *C* 2″ from left edge and $2\frac{1}{4}''$ from top; *C* 2″ from left edge and $3\frac{1}{2}''$ from top. Draw a circle through *A*, *B* and *C*.

17. Construct a triangle having three sides as follows: $2\frac{1}{4}''$, 3″, $3\frac{3}{4}''$. Draw a circle passing through the corners of the triangle.

18. Construct an ogee curve joining two parallel lines *AB* and *CD* as in Fig. 125, making $X = 4''$, $Y = 2\frac{1}{2}''$, and $BE = 3''$. Consider this as the center line for a rod $1\frac{1}{4}''$ diameter and draw the rod.

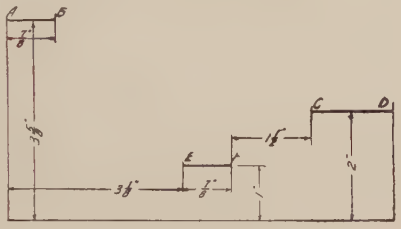

Fig. 154.—Prob. 19.

19. Lay out lines *AB*, *CD* and *EF* as in Fig. 154. Draw ogee curves joining *AB* and *CD*, *AB* and *EF*, and *EF* and *CD*.

20. Draw an arc of a circle having a radius of $3\frac{13}{16}''$, with its center $\frac{1}{2}''$ from top of space and $1\frac{1}{2}''$ from left edge. Find the length of an arc of 60° by construction, and compute the length arithmetically and check the result.

Tangent Problems

These problems are given for practice in accurate joining of tangent lines. Read paragraphs 51 to 56 carefully before beginning. Locate centers for all circle arcs geometrically. Ink outlines and center lines only.

21. A *gasket*. Outside diameter 4″. Inside diameter $2\frac{3}{4}''$. Two $\frac{3}{4}''$ holes, 5″ center to center. Ears $\frac{3}{4}''$ radius, 1″ fillets. Mark tangent points in pencil, as in Fig. 124.

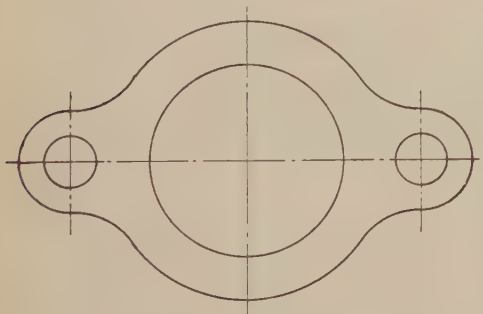

Fig. 155.—Gasket.

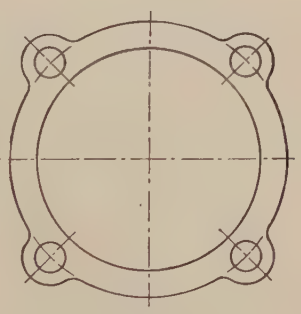

Fig. 156.—Shim.

22. A *shim*. Outside diameter $3\frac{3}{4}''$. Inside diameter $3\frac{1}{32}''$. Holes $1\frac{3}{32}''$. Ears $\frac{3}{8}''$ radius, $\frac{3}{16}''$ fillets. Draw center lines and on them measure and mark radii for given diameters. Mark all tangent points in pencil, as in Fig. 124.

23. Front view of a *star knob.* Radius of circumscribing circle $2\frac{3}{8}''$. Diameter of hub $2\frac{1}{2}''$. Diameter of hole $\frac{3}{4}''$. Radius at points $\frac{3}{8}''$. Radius of fillets $\frac{3}{8}''$. Mark tangent points in pencil.

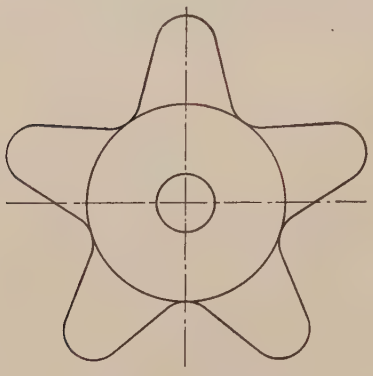

Fig. 157.—Star knob.

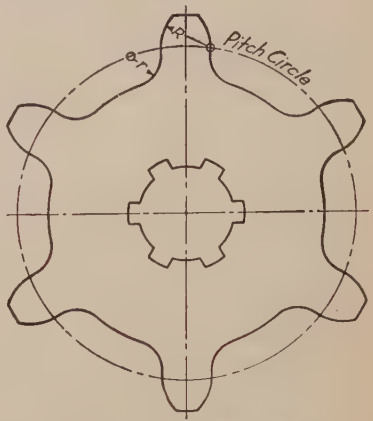

Fig. 158.—Sprocket.

24. Front view of a *sprocket.* Outside diameter $4\frac{3}{4}''$; pitch diameter $4''$; root diameter $3\frac{1}{4}''$, bore $1\frac{1}{4}''$. Thickness of tooth at pitch line $\frac{9}{16}''$. Splines $\frac{1}{4}''$ wide by $\frac{1}{8}''$ deep. Mark tangent points in pencil.

25. A motor *lamination stamping.* Outside diameter $5''$. Center to center of $\frac{1}{4}''$ holes $4''$. Inside diameter $2\frac{1}{2}''$. Center to center of slot $3\frac{1}{16}''$; width of slot $\frac{9}{16}''$. Mark tangent points in pencil.

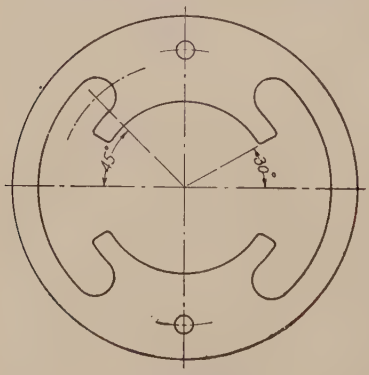

Fig. 159.—Lamination.

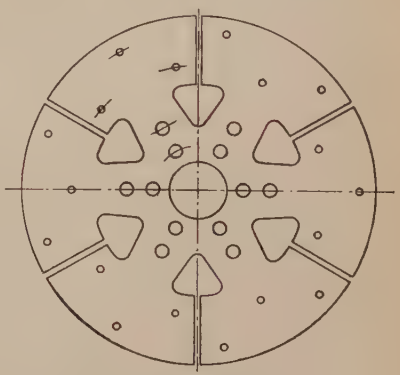

Fig. 160.—Clutch plate.

26. A *clutch plate.* Outside diameter $10\frac{3}{4}''$ bore $1\frac{3}{4}''$. Width of face $2\frac{1}{4}''$. The arms (extended) are tangent to a $2''$ circle at the center and are $1\frac{1}{2}''$ wide at intersection with inside diameter of face. Fillets are $\frac{1}{4}''$ radius. Slots $\frac{1}{8}''$ wide. Diameter of outside rivet circle $9\frac{3}{4}''$, inside rivet circle $7\frac{3}{4}''$, for nine $\frac{1}{8}''$ holes equally spaced. On a $4\frac{3}{8}''$ and a $2\frac{3}{4}''$ circle space six $\frac{3}{8}''$ holes each. Mark tangent points in pencil.

Curve Problems

In locating a curve the number of points to be determined will depend upon the size of the curve and the rate of change of curvature. More points should be found near the sharp turns. For the most of the following, points should be about $\frac{1}{4}''$ apart.

27. Draw an ellipse having a major axis of $4\frac{1}{2}''$ and a minor axis of $3''$. Use method of Fig. 131.

28. Draw an ellipse having a major axis of $4\frac{5}{8}''$ and a minor axis of $1\frac{1}{2}''$. Use method of Fig. 134.

29. Draw an ellipse having a major axis of $4\frac{7}{16}''$ and distance between foci of $3\frac{1}{2}''$. Construct a tangent at a point on the curve.

30. Draw an ellipse having its major axis horizontal and a distance between foci of $3\frac{13}{16}''$. One point on the ellipse is $1\frac{1}{2}''$ to left of minor axis and $\frac{7}{8}''$ above major axis.

31. Draw the left half of an ellipse with its major axis vertical and $2\frac{1}{2}''$ long. Its minor axis is $1\frac{1}{4}''$. Using the above major axis as a minor axis draw the right half of an ellipse which has a focus $3''$ to the right of the center.

32. Draw an ellipse having a minor axis of $2\frac{3}{16}''$ and a distance between foci of $3\frac{1}{4}''$. Major axis horizontal. Draw a tangent at a point $1\frac{3}{8}''$ to the right of the minor axis.

33. Draw an ellipse having a horizontal major axis $4''$ long. A tangent to the ellipse makes an angle of 60° with the minor axis and intersects the minor axis $1\frac{3}{4}''$ from the center.

34. Draw an approximate ellipse having a major axis of $5''$ and a minor axis of $3\frac{1}{2}''$. Use method specified by instructor.

35. Draw an approximate ellipse having a major axis of $6''$. Use method of Fig. 138. Make the minor axis as small as the method permits.

36. Using the same center lines draw two ellipses, the first with major axis $6''$ and minor axis $4''$, the second with major axis $4\frac{1}{2}''$, minor axis $2\frac{1}{2}''$.

37. Draw an ellipse having conjugate axes of $4\frac{3}{4}''$ and $2\frac{3}{4}''$, and making an angle of 75° with each other. Determine the major and minor axes.

38. Draw a parabola, axis horizontal, with directrix AB $4\frac{3}{8}''$ long and focus $\frac{1}{2}''$ from it (Fig. 141). Directrix $1''$ from left border.

39. Draw a parabola, axis vertical with directrix AB $5\frac{3}{8}''$ long; focus $1\frac{1}{2}''$ from it. Construct a tangent at a point on the curve.

40. Draw a parabola, axis horizontal, in a rectangle $4''$ high, $2''$ wide. Fig. 142.

41. Draw a parabolic arch, $6''$ span, $2\frac{1}{2}''$ rise, by offset method. Fig. 143, dividing half span into eight parts.

42. Draw a parabolic curve by envelope method Fig. 144, $4'' \times 2\frac{1}{2}''$.

43. Draw a hyperbola, foci $1\frac{1}{8}''$ apart, and constant difference $\frac{3}{4}''$. Construct a tangent at a point on the curve.

44. Draw an equilateral hyperbola passing through a point P $\frac{1}{2}''$ from OB and $2\frac{1}{2}''$ from OA. Fig. 146.

45. Draw an equilateral hyperbola passing through point P $4''$ from OB and $\frac{3}{8}''$ from OA. Fig. 146.

46. Draw the involute of an equilateral triangle, one side of which is $\frac{1}{2}''$.

47. Draw the involute of a right triangle, the two sides of which are $\frac{3}{8}''$ and $1\frac{1}{8}''$.

48. Draw one-half turn of the involute of a circle $3\frac{1}{4}''$ in diameter, whose center is $1''$ from the left edge of space. Compute the length of the last tangent and compare with the measured length.

49. Draw a cycloid. Rolling circle $1\frac{1}{4}''$ in diameter.

50. Draw a spiral of Archimedes making one turn in a circle $4''$ in diameter.

CHAPTER VI

The Theory of Projection Drawing

80. The previous chapters have been preparatory to the real subject of engineering drawing as a language. In Chapter I there was pointed out the difference between the representation of an object by the artist to convey certain impressions or emotions and the representation by the engineer to convey information. The full information required by the engineer includes the description of the *shape* of the object and the specification of the *size* of every detail in it. In this chapter we are concerned with the different methods of describing the *shape*.

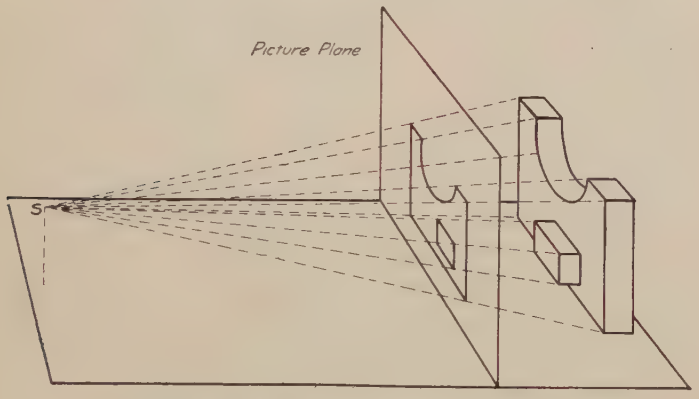

Fig. 161.—Perspective projection.

If an ordinary object be looked at from some particular station point one may usually get a good idea of its shape because (1) generally more than one side is seen, (2) the light and shadow on it tell something of its configuration, (3) looked at with both eyes there is a stereoscopic effect which aids in judging shapes and dimensions. In technical drawing the third point is never considered but the object is drawn as if seen with one eye; and only in special cases is the effect of light and shadow rendered. In general we have to do with outline alone.

If a transparent plane be imagined as set up between an object and the station point S of an observer's eye, Fig. 161, the inter-

section with this plane of the cone of rays formed by lines from the eye to all points of the object will give a picture of the object which will be practically the same as the picture formed on the retina of the eye by the intersection of the other end (nappe) of the cone. Drawing made on this principle is known as *perspective drawing* and is the basis of all artists' work. In a technical way it is used chiefly by architects in making preliminary sketches for their own use in studying problems in design, and for showing their clients the finished appearance of a proposed building. It is entirely unsuited for working drawings as it shows the object as it appears and not as it really is.

If the observer be imagined as walking backward from the station point S until he reaches a theoretically infinite distance,

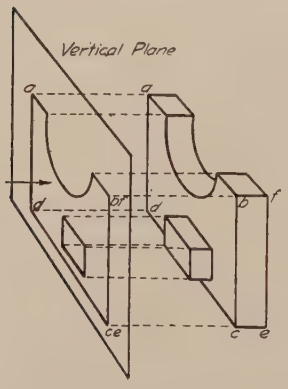

Fig. 162.—Orthographic projection.

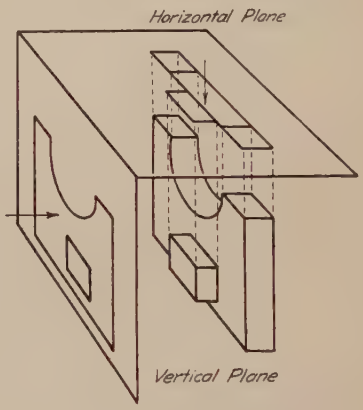

Fig. 163.—The planes of projection.

the cone of rays formed by the projecting lines from his eye to the object will grow longer until it finally becomes a cylinder, with the visual rays all parallel to each other and perpendicular to the picture plane, and the picture becomes what is known as an *orthographic projection*. If now all of the cylinder from the picture plane to infinity be discarded the picture can be thought of as being found by extending perpendiculars to the plane from all points of the object, Fig. 162. This picture, or projection, will evidently have the same width and height as the object itself, but it will not tell the thickness, hence more than one projection will be required to describe the object. In orthographic projection the picture planes are called *planes of projection* and the perpendiculars *projecting lines* or *projectors*.

If now another transparent plane be imagined as placed horizontally above the object, as in Fig. 163, the projection on this plane, found by extending perpendiculars to it from the object, will give the appearance of the object as if viewed from directly above it, and will show exactly the length and thickness. These two planes represent the paper, and if the horizontal plane be revolved as in Fig. 164 the two views will be shown in their correct relationship and together will give the three dimensions of the object.

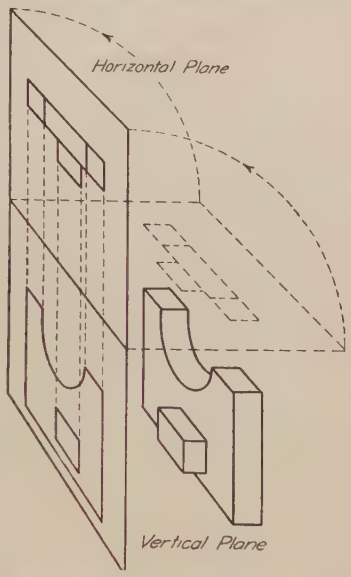

FIG. 164.—The horizontal plane revolved.

81. One Plane Methods.—If the object, instead of being placed in its natural position parallel to the plane of projection, be imagined as turned at an angle then tilted forward so that three of its faces would be seen, a special kind of orthographic projection known as *axonometric projection* would result. It has three subdivisions, isometric, dimetric and trimetric, all explained in Chapter VIII.

Another division in the classification of methods of projection is that of *oblique projection* in which the object is imagined as placed parallel to the plane of projection and projected to it by a system of parallel projecting lines making an angle other than 90 degrees with the plane.

Axonometric and oblique projection are classified, along with perspective, as one-plane pictorial methods, distinguishing them from the usual orthographic projection, in which at least two planes are required to show the three dimensions of the object.

The different systems of projection are classified in tabular form on the following page, with page references to the text.

PROJECTION DRAWING

- **Orthographic Projection**
  Projectors perpendicular to planes of projection
  - **Multiplanar**
    (Two or more planes)
    - **Two view drawings**
    - **Three view drawings**
    - **Drawings with auxiliary views** *Page* 90
  - **Axonometric**
    (One plane)
    - **Isometric projection**
      Three axes making equal angles with plane. *Page* 123
    - **Isometric Drawing,** *Page* 124
    - **Dimetric projection**
      Two of the three axes making equal angles with plane. *Page* 131
    - **Dimetric Drawing,** *Page* 131
    - **Trimetric projection**
      Three axes making unequal angles with plane. *Page* 131
- **Oblique Projection**
  Projectors oblique to planes of projection
  (One plane)
  - **Cavalier projection**
    Two axes parallel to plane, projectors making an angle of 45° with it, in any direction. *Page* 131
  - **Cabinet projection**
    Two axes parallel to plane, projectors making an angle 26° 35′ approximately. *Page* 135
  - **Various oblique positions** *Page* 136
  - **Clinographic projection**
    Object turned at an angle whose tangent is $\frac{1}{3}$
    Projectors at an angle whose tangent is $\frac{1}{6}$. *Page* 136
- **Perspective Projection**
  Projectors converging to a fixed point
  (One plane)
  - **Parallel perspective**
    Object with one face parallel to plane. *Page* 313
  - **Angular perspective**
    Two faces of object inclined to plane. *Page* 310
  - **Oblique perspective**
    Three faces of object inclined. (*Rarely used*)

CHAPTER VII

Orthographic Projection

82. The problem in engineering drawing is to reproduce the exact shape of an object with its three dimensions, length, breadth and thickness, on the surface of a sheet of paper which has only two dimensions. To do this the system of orthographic projection has been devised. Practically, this means that the drawing is made up of a set of separate views looking at the object from different positions, and arranged in a definite way, each view showing two of the three dimensions. Illustrating with the block shown in Fig. 165; if the observer imagine himself as in a

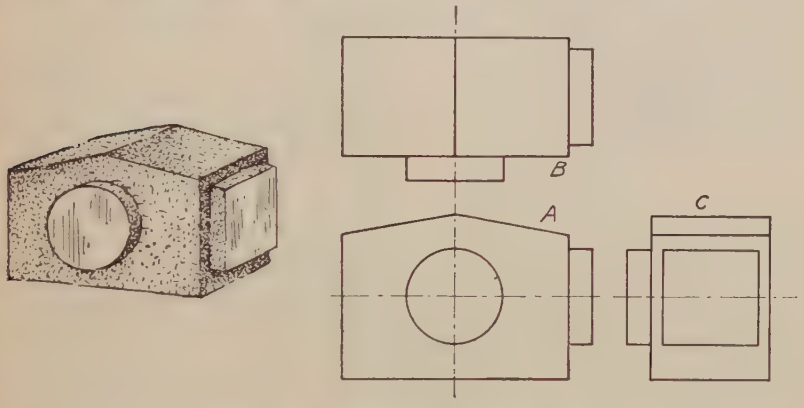

Fig. 165.—A block and its three views.

position directly in front (theoretically at an infinite distance, practically at a reasonable seeing distance but assuming the rays of light from each point to his eye as parallel) the front view would appear as at *A*. This view tells the length and height but not the width of the block nor what the circle represents. Then let the observer change his position so as to look down from directly above the block. He will see the top view as at *B*, giving the length and width, and showing that the circle of the front view is a projecting boss. It is necessary to have another view in this case to show the shape of the extension on the side.

C is the right side view. These three views arranged in their natural position with the top view directly above the front view, and the side view in line with the front view completely describe the shape of the block. Note that in the top and side views the front of the block always faces toward the front view.

The theory upon which this is based has been outlined in paragraph 80, and on it the following definition may be given.

83. Definition.—Orthographic projection is the method of representing the exact shape of an object in two or more views on planes generally at right angles to each other, by dropping perpendiculars from the object to the planes.

84. "The Glass Box."—The object may thus be thought of as surrounded by a box with transparent sides hinged to each

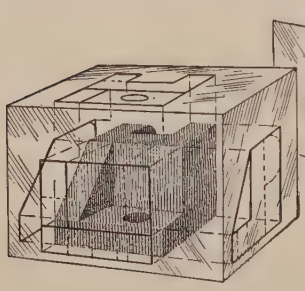

Fig. 166.—The transparent box.

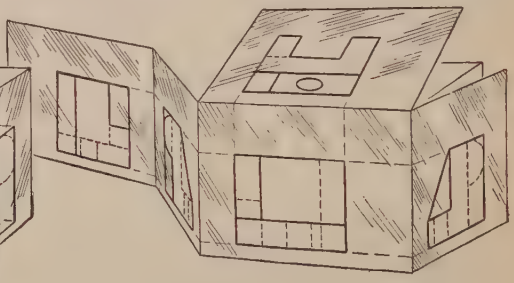

Fig. 167.—The box as it opens.

other, Fig. 166. The projections on these sides would be practically what would be seen by looking straight at the object from positions directly in front, above and from both sides. These planes are then to be thought of as opening up as illustrated in Fig. 167 into one plane. The projection on the front plane is known as the *front view, vertical projection,* or *front elevation;* that on the horizontal plane the *top view, horizontal projection,* or *plan;* that on the side or "profile" plane the *side view* or *end view, profile projection, side* or *end elevation.* Figure 168 shows the relative positions of the *front, top* and *right side* views, which taken together completely describe the shape of the block. Sometimes the left side view describes an object more clearly than the right side would do. Figure 169 shows the top, front and left side views. Note again that in the side views the object is facing the front view, and that thus the side view of any point will be the same distance horizontally from the front edge as its top view is back from the front edge.

In comparatively rare cases a bottom view or a rear view may be required to show some detail of shape or construction. Figure

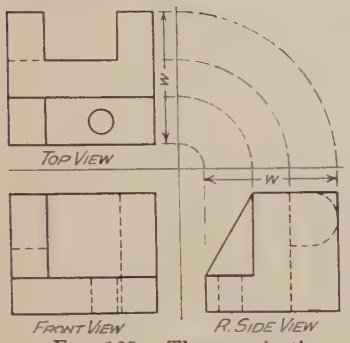

FIG. 168.—Three projections.

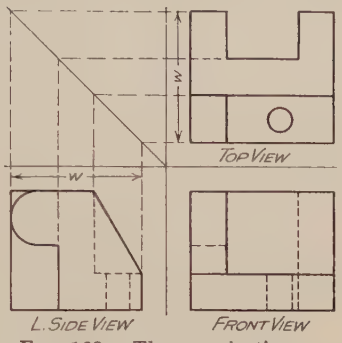

FIG. 169.—Three projections.

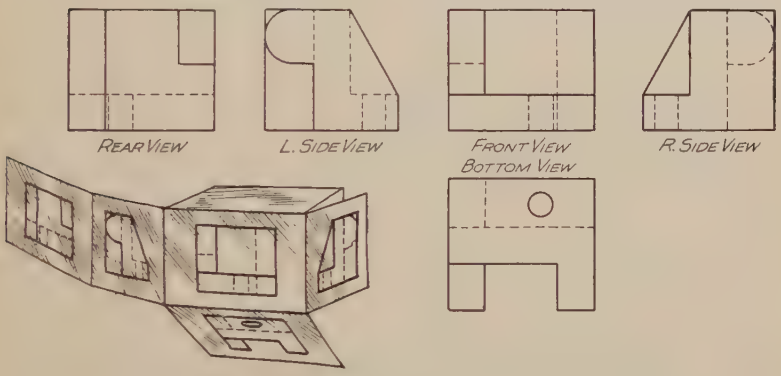

FIG. 170.—Positions of bottom view and rear view.

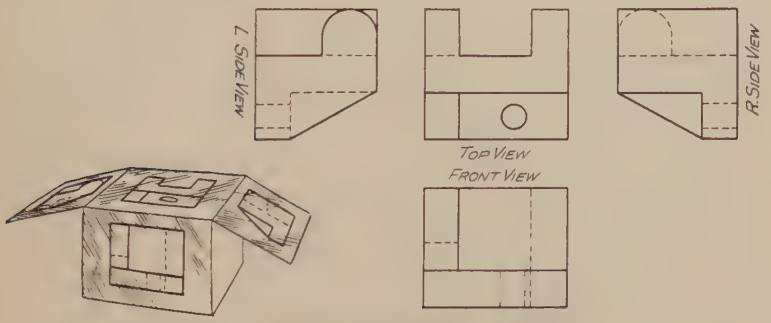

FIG. 171.—Side views in "second position."

170 shows the arrangement of these views. The plane of the rear view is hinged to that of the left side view, giving it the

position recommended by the American Standards Association. Compare Figs. 170 and 168.

The ends of the box may be conceived as hinged to the top instead of the front plane, as in Fig. 171, thus placing the side views across from the top view. This arrangement is of occasional use in drawing a broad flat object, in order to save space on the paper.

85. Principles.—From the foregoing study the following principles will be noted:

1. The top view is directly over the front view.
2. The side views are in line horizontally with the front view.
3. The widths of the side views are exactly the same as the width of the top view.
4. A surface parallel to a plane of projection is shown in its true size.
5. A surface perpendicular to a plane of projection is projected as a line.
6. A surface inclined to a plane of projection is foreshortened.

Similarly,

7. A line parallel to a plane of projection will show in its true length.
8. A line perpendicular to a plane of projection will be projected as a point.
9. An inclined line will have a projection shorter than its true length.

86. Drawing in Orthographic Projection.—In beginning the study of projections it is well to draw freehand the three views of a number of simple pieces, developing the ability to "write the language" and exercising the constructive imagination in seeing the object itself by reading the three projections. In Fig. 168 a method of obtaining the side view by projecting across from the front view and revolving the points of the top view projected to the edge of the "*P*" plane was shown. This construction is of aid to the beginner in getting the relationship of the three views. In practical work the "ground lines" or intersections between the reference planes are not drawn, and very often only two views are necessary.

As a general rule the view showing the characteristic contour or shape of a piece should be started first. Space the views so as to give a well-balanced appearance and carry them along together, projecting from one to another.

87. Dotted Lines.—As shown in the alphabet of lines on page 27, an invisible line is indicated by a "dotted" line, that is, a line made up of short dashes, with the space between dashes less than half the length of the dash. The beginner must pay particular attention to his dotted lines, as it is important that they start and stop correctly, and that they are uniform in lengths of dashes and spaces. An invisible line always starts with a dash except when the invisible line would form a continuation of a full line. Dashes always touch at corners. An arc starts with a dash at the tangent point. Study carefully all the hidden lines on Fig. 172.

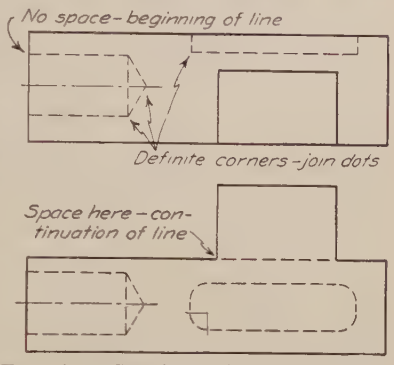

Fig. 172.—Starting and stopping dotted lines.

88. Reading a Drawing.—A line on a drawing always indicates either an intersection of two surfaces, as in the projection of a prism, or a contour, as in the projection of a cylinder. One cannot read a drawing by looking at one view. Each line on the view means a change in the direction of a surface, but the corresponding part of another view must be consulted to tell what the change is. For example, as seen in Fig. 164, a circle on a front view may mean either a hole or a projecting boss. A glance at the side view or top view will show at once which it is. In reading a drawing one should first gain a general idea of the shape of the object by a rapid survey of all the views given, then should select for more careful study the view that best shows the characteristic shape, and by referring back and forth to the adjacent views see what each line represents. In looking at any view, one should always imagine that it is the object itself, not a flat projection of it, that is seen, and in glancing from one view to another the reader should imagine himself as moving around the object and looking at it from the direction the view was taken.

Figure 173 shows successive cuts made in a block and the corresponding projections of the block in the different stages. The effort should be made to visualize the object from these projections until the projection can be read as easily as the picture. A drawing as simple as A' or B' can be read and the mental picture

formed at a glance; one with more lines, as E' will require a little time for study and comparison of the different views. One cannot expect to read a whole drawing at once any more than he would think of reading a whole page of print at a glance.

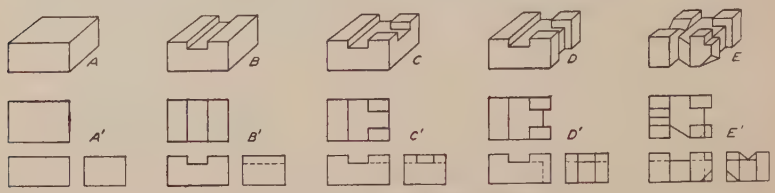

FIG. 173.—A progressive series.

Figures 174 and 175 are other progressive series to be studied. The objects in Fig. 176 are to be "written" in orthographic projection by sketching their three views. Similar practice may be gained by sketching the projections of any simple models

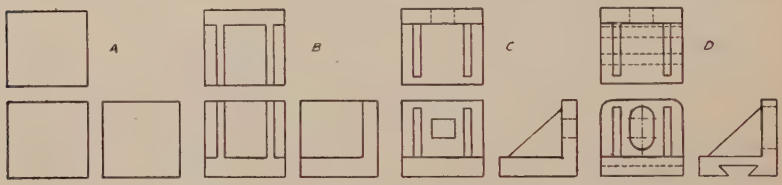

FIG. 174.—A progressive series.

or objects with geometrical outlines, such as those illustrated in Fig. 587.

After a study of the methods of pictorial representation in the next chapter, this operation should be reversed, and reading

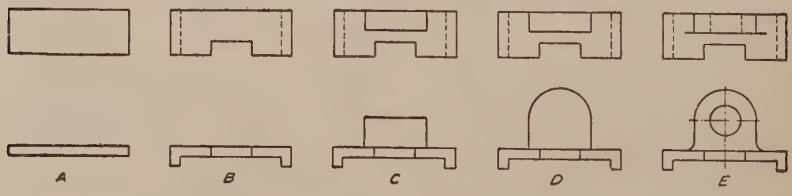

FIG. 175.—A progressive series.

practiced by making the pictures of objects shown in orthographic projection.

89. Auxiliary Views.—A surface is shown in its true shape when projected on a plane parallel to it. In the majority of cases the object may be placed with its principal faces parallel

to the three reference planes and be fully described by the regular views. Sometimes however the object may have one or more inclined faces whose true shape it is desirable or necessary to show, especially if irregular in outline. This is done by making an auxiliary view looking straight against the surface, that is,

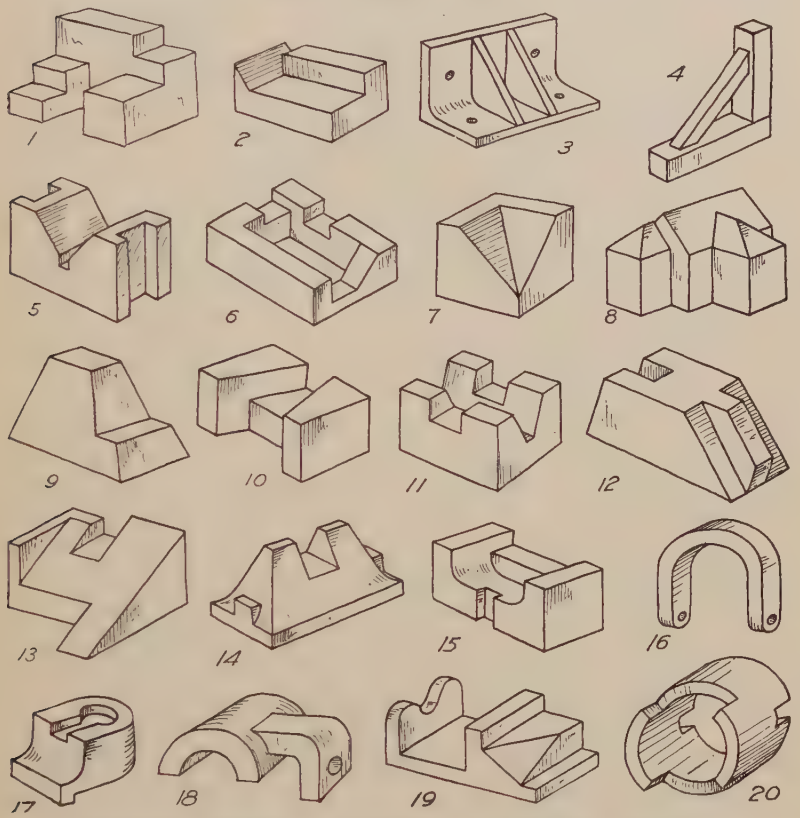

Fig. 176.—Problems to be sketched in orthographic projection.

imagining a projection on an extra or auxiliary plane parallel to the inclined surface, therefore perpendicular to the same reference plane to which the inclined surface is perpendicular, and revolving it into the plane of the paper.

90. There are three kinds of auxiliary views, first, *auxiliary elevations*, Fig. 177, made on planes which are perpendicular to the horizontal plane but making an angle with the vertical plane, or, in other words, the kind of views that would be seen if one

walked around the object, starting from the position at which the front view is seen. Thus an auxiliary elevation would be the same height as the front view.

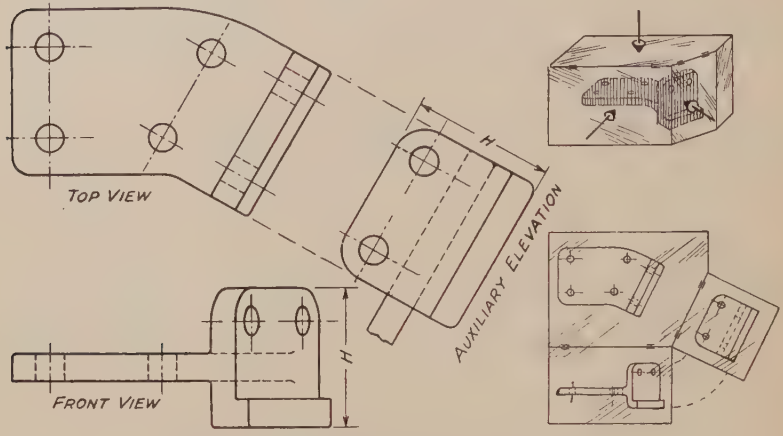

Fig. 177.—Auxiliary elevation (stop bracket).

The second kind, which occur much more frequently, are *left-and-right auxiliary views*, made on planes perpendicular to *V* but inclined to *H*. Figure 178 has a right auxiliary view

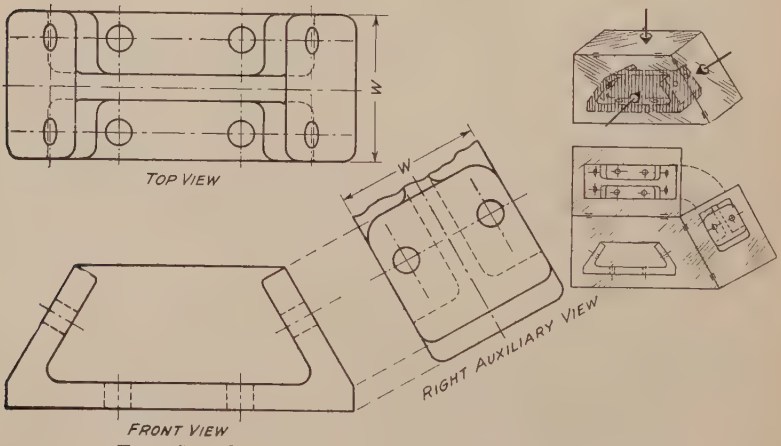

Fig. 178.—Right auxiliary view (reverse angle bracket).

of the inclined surface of the angle bracket and shows that the width of this auxiliary view is the same as the width of the top view.

The third division is that of *front-and-rear auxiliary views*, made on planes perpendicular to the profile plane but inclined to H and V. Figure 179 contains a front auxiliary view of the entire piece, showing the top face in its true shape.

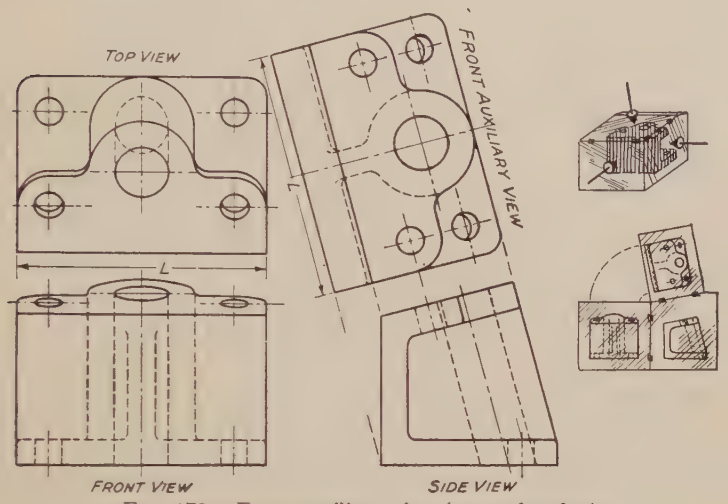

FIG. 179.—Front auxiliary view (spacer bracket).

91. Often an auxiliary view will save making one or more of the regular views and at the same time show the shape or construction of the object to better advantage. In practical work extensive use is made of auxiliary views. They are usually only

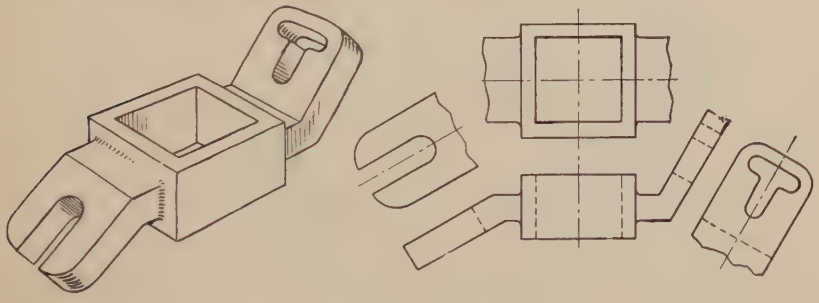

FIG. 180.—Use of partial views.

partial views of the objects, as in Figs. 177 and 178, where nothing would be gained by projecting the whole piece. A casting, for example, as pictured in Fig. 180, would be drawn as shown, making both the auxiliary views and the top view as partial views. In

Fig. 181 the auxiliary view takes the place of a side view and also shows the true shape of the rounded surface, since it is taken perpendicular to the surface. An auxiliary view may be placed at any convenient place on the paper.

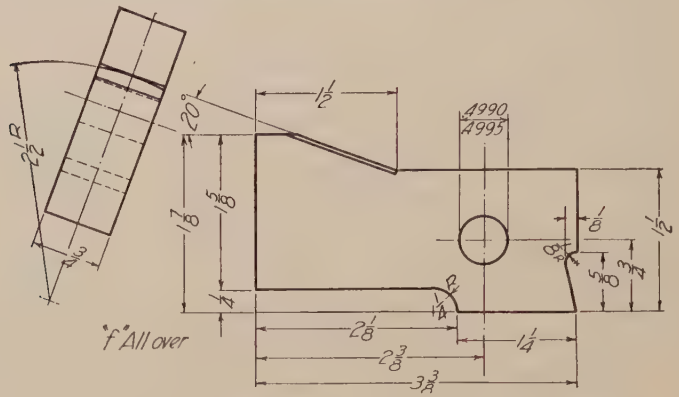

Fig. 181.—Working drawing with auxiliary view (toggle).

92. To Draw an Auxiliary View.—Auxiliary views if symmetrical are worked from center lines, if not, from reference lines, and their dimensions are directly obtainable from the other

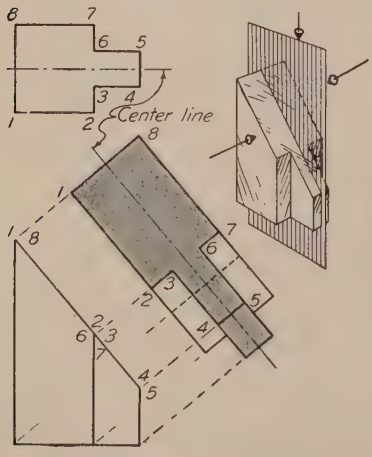

Fig. 182.—Auxiliary view using center line.

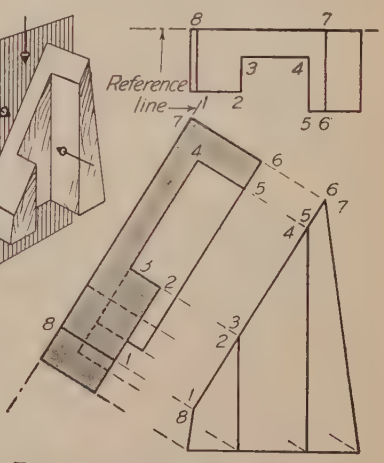

Fig. 183.—Auxiliary view using reference line.

views. In Fig. 182 to show the true size of the cut surface of the prism a right auxiliary view will be required. Draw a center line for the auxiliary view parallel to the cut surface and at any

convenient distance from it. Draw a horizontal center line on the top view. Think of these two center lines as the edge views of a vertical cutting plane through the piece, as illustrated in the small sketch. Project each point of the cut face by drawing projecting lines from the front view perpendicular to the auxiliary center line. The width of the auxiliary view will evidently be the same as the width of the top view. Thus for each point measure its distance from the center line on the top view and lay off this distance from the center line on the auxiliary view. Notice that points 1, 2, 3 and 4 are in front of the cutting plane (center line) as shown on the top view and therefore are measured toward the front on the auxiliary view. Figure 183 illustrates the method of drawing the auxiliary view of an unsymmetrical piece, working from a reference plane at the back of the piece, whose edges are represented by the horizontal reference line on the top view and the reference line parallel to the cut face for the auxiliary view.

While in practical work usually only the detail of the inclined face is necessary, such Figs. as Figs. 231 and 232 make interesting problems in drawing when the entire figure is projected on the auxiliary plane as in Figs. 182 and 183.

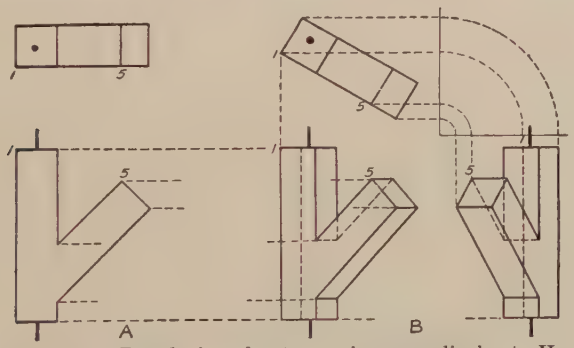

FIG. 184.—Revolution about an axis perpendicular to H.

93. Revolution.—Sometimes a piece occurs in a position oblique to one or both planes, and to draw its projections it may be necessary to draw it first in a simpler position. This may be done either by one or more auxiliary views, or by *revolving* the piece from the simpler to the required position.

Rule for Revolution.—If an object be revolved about an axis perpendicular to a plane, (1) its projection on that plane will change only in position, but not in size and shape. (2) The

dimensions parallel to the axis on the other planes of projection will be unchanged.

Illustration.—If the object at *A*, in Fig. 184, be revolved about a vertical axis through 30 degrees the top view will be unchanged

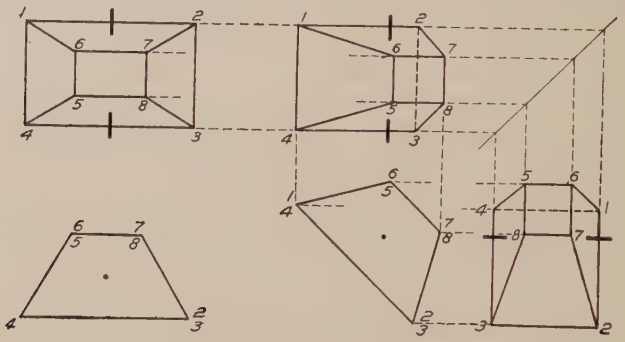

FIG. 185.—Revolution about an axis perpendicular to V.

in shape but will take a position as in *B*. The vertical height of the object remains unchanged in the revolution, so the new front

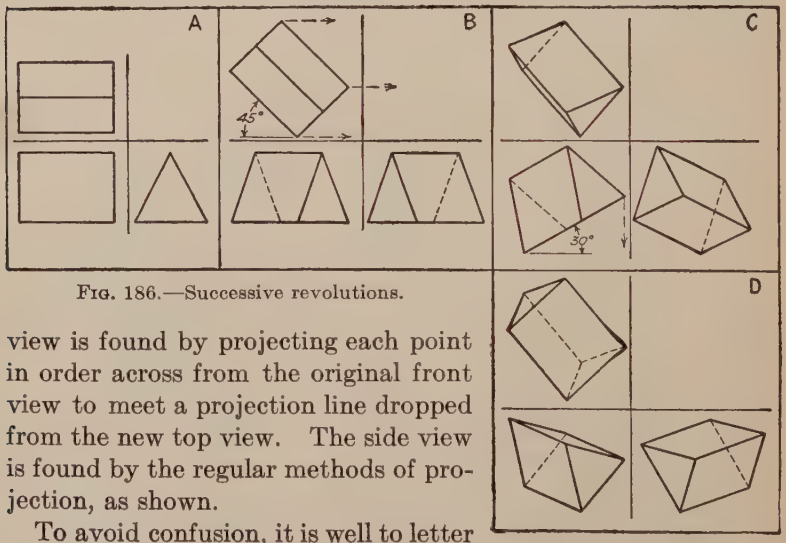

FIG. 186.—Successive revolutions.

view is found by projecting each point in order across from the original front view to meet a projection line dropped from the new top view. The side view is found by the regular methods of projection, as shown.

To avoid confusion, it is well to letter or number the corresponding points as the views progress.

Similarly, if an object be revolved about a horizontal axis, perpendicular to the *V* plane, Fig. 185, the front view would be unchanged and would be copied in its revolved position. The new top view would be found by projecting across from the

original top view and up from the new front view. The side view would be found as before.

In a revolution forward or backward about an axis perpendicular to the profile plane the side view is unchanged and the new front view is found by projecting across from the side view, the width being the same as the original front view.

Successive revolutions may be made under the same rules. Figure 186 is a block revolved first about an axis perpendicular to H through 45 degrees, from this position revolved about an axis perpendicular to V through 30 degrees, and from this last

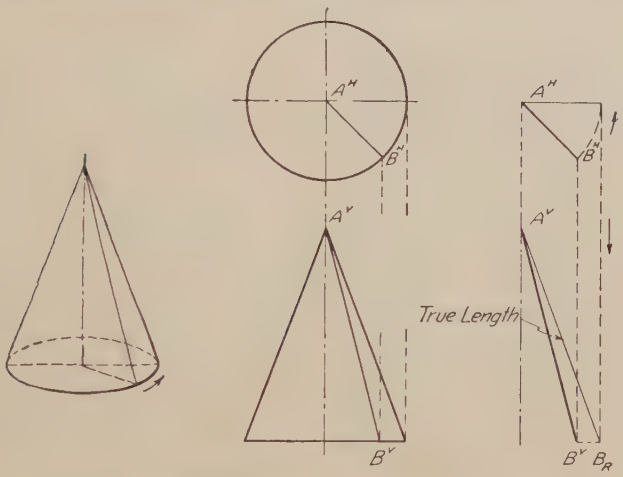

FIG. 187.—The true length of a line.

position revolved again about an axis perpendicular to the profile plane through 45 degrees.

Evidently the only difference between the methods of revolution and auxiliary projection is, that in the former the object is moved while in the latter the plane of projection is moved, and while revolution has very little application in practical drafting, problems in it are an excellent aid to the student in understanding the theory of projections.

94. The True Length of a Line.—A line inclined to both H and V will not show its true length in either projection. If it be revolved until it is parallel to one of the planes its projection on that plane will be its true length.

This may be easily understood by assuming the line to be an element on a cone, as in Fig. 187. The slant lines of the front

view of a cone show the true lengths of its elements. If the cone be imagined as revolved about its axis each element in turn will take a position parallel to the plane of projection. Thus if the line AB be assumed to be on a cone as in the figure, its true length would be found by revolving the top view until the line is parallel to V and projecting the end down to meet the horizontal line corresponding to the base of the cone.

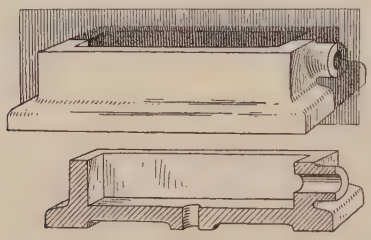

Fig. 188.—The cutting plane.

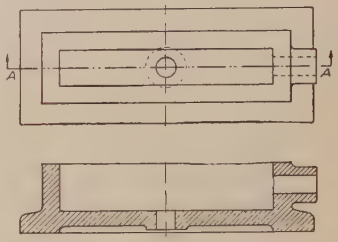

Fig. 189.—Section on A-A.

95. Sectional Views.—Often it is not possible to show clearly the interior construction of an object by outside views, using dotted lines for the invisible parts. In such case a view is made "in section," as if for that particular view a part of the piece were cut or broken away and removed. This view is known as a sectional view or section and the exposed cut surface of the material is indicated by "section lining," or "cross-hatching."

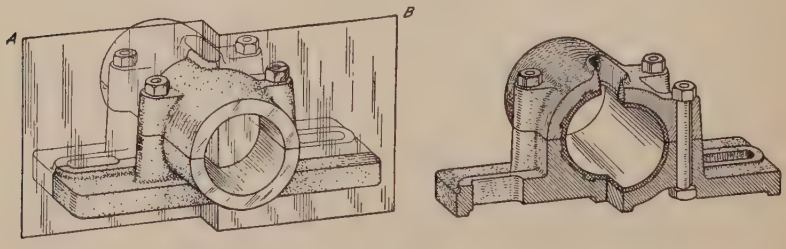

Fig. 190.—Picture of an offset cutting plane.

It must be understood clearly that in thus removing the front portion in order to show the sectional view, this portion is *not* removed from the other views. Figure 188 shows a casting intersected by a cutting plane, and its appearance when the front half is removed exposing the interior. Figure 189 shows the two views of the casting, the front view in section. The edge of the cutting plane is indicated on the top view by a line symbol

(line 7 in the alphabet of lines), with reference letters, and arrows showing the direction the view is taken.

96. Five Principles in Sectioning.—1. The cutting plane need not be a single continuous plane but may be taken so as to show the construction to the best advantage, Fig. 190.

2. Shafts, bolts, nuts, rods, rivets, keys and the like, whose axes occur in the plane of the section have no interior parts to be shown and consequently are left in full and not sectioned, Fig. 191.

3. Invisible lines beyond the plane of the section should not be drawn unless necessary for the description of the piece.

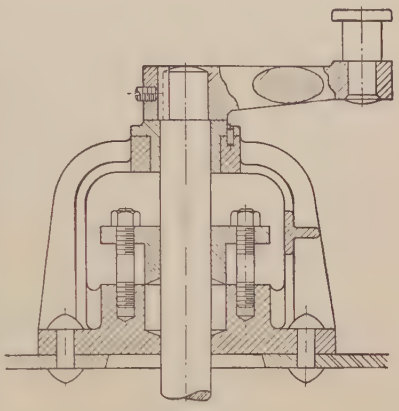

FIG. 191.—Section study.

4. Adjacent pieces are section-lined in opposite directions, and are often brought out more clearly by varying the pitch, using closer spacing for smaller pieces.

5. The same piece in different views or in different parts of the same view should always be section-lined identically in direction and spacing.

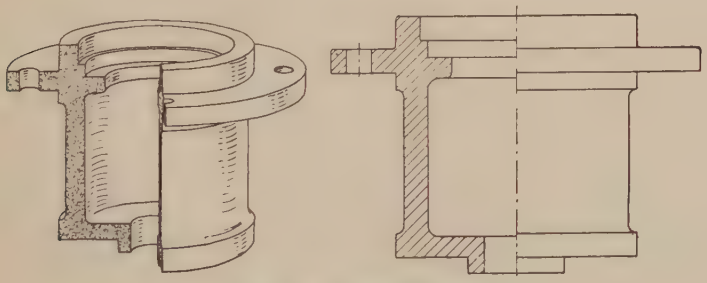

FIG. 192.—Half-section.

97. Half Sections.—A common and economical way of showing a piece which is symmetrical about a center line is by drawing one side in section and the other in full. In such a view dotted lines are unnecessary, Fig. 192.

98. Revolved sections or "turned up" sections provide a very convenient and useful method of showing the shape of some detail of construction such as a rib, or the arm of a wheel. The cutting plane is passed perpendicular to the surface and revolved in place. Figure 191 contains a revolved section, and also illustrates the "broken-out section," another device of occasional convenience.

99. Detail sections are for the same purpose as revolved sections but instead of being drawn on the piece they are set off to some adjacent place on the paper. The cutting plane, with reference letters, should always be indicated. When the shape of a piece is not uniform several cross-sections may be required. It is often of advantage to draw these detail sections to larger scale than that of the main drawing.

100. Phantom sections or dotted sections, Fig. 193, are exterior views with the interior construction brought out by

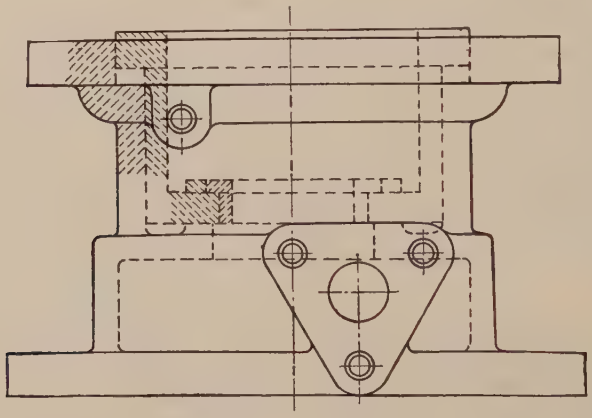

FIG. 193.—Phantom section.

dotted cross-hatching. Sometimes their use saves making an extra view. This term is also used for an absent part dotted in to show the relative position of the pieces represented, as in Fig. 537.

101. Section lining is done with fine lines generally at 45 degrees, spaced uniformly to give an even tint, the spacing being governed by the size of the surface but except in small drawings not less than $\frac{1}{16}''$. The spacing is done entirely by the eye. Care should be exercised in setting the pitch by the first two or three lines, and one should glance back at the first

lines often in order that the pitch may not gradually increase or decrease.

Large surfaces in section are sometimes sectioned only around the edge as illustrated by thé part view, Fig. 194.

Standard symbols for different materials in section are sometimes used.

Sections are used very extensively in working drawings, and a further discussion will be found in Chapter XII, page 221.

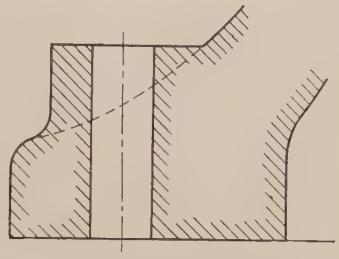

Fig. 194.—Outline sectioning.

102. First Angle Projection.—The system of orthographic projection explained in this chapter is known as "third angle projection" and is the universally adopted standard in the United States.

If the horizontal and vertical planes are extended beyond their intersection four dihedral angles will be formed which are called respectively first, second, third and fourth angles, numbered as illustrated in Fig. 195. If the object be placed in the *first* angle, projected to the planes and the planes opened up into one plane, the top view would evidently fall below the front view, and if the profile view were added the view of the left side of the figure would be

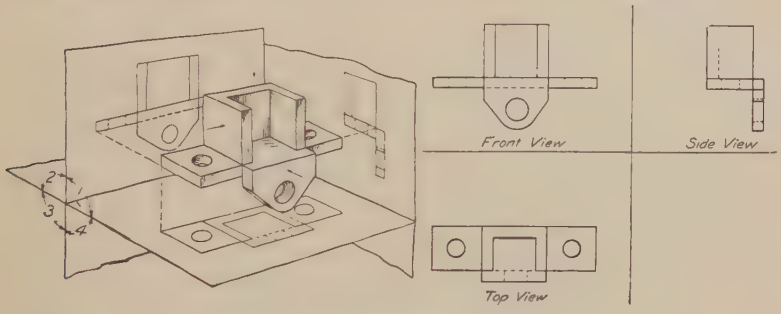

Fig. 195.—First angle projection.

to the right of the front view. This system, known as "first angle projection" was formerly in universal use but was generally abandoned in this country some thirty or more years ago and is now obsolete. The student should understand it, however, as it may be encountered occasionally in old drawings, in some book illustrations and in drawings from most foreign countries.

In England some attempt has been made to introduce the more practical third angle projection but nearly all British drawings are either first angle or with the curious combination of first angle for top and front views and

third angle for the side view. Holland has recently adopted third angle projection as standard, but other European countries still adhere to the older method. Canadian practice is the same as American.

PROBLEMS

103. Selections from the several groups of the problems following are to be made for practice in projection drawing. They are intended to be drawn with instruments but will give valuable training done freehand on either plain or coordinate paper.

The two things to be told about an object are its *shape* and its *size*. The former is given by the projections, the latter, which is just as important, is given by the dimensions.

These problems although designed primarily for *shape* description may be drawn as introductory working drawings by adding dimension lines and figures. If this is done, Chapter X on Dimensioning must be studied carefully, the dimensions placed according to the rules given, and checked for accuracy.

If drawn to the sizes given the problems will each occupy a space not to exceed $5'' \times 7''$ with a few exceptions.

Group I. Projections from Pictorial Views. Probs. 1 to 17, Figs. 196 to 212.

The first requirement of a good drawing, after the requisite views have been determined, is that the views be well spaced on the sheet, allowing adequate room for dimensions. Make a quick preliminary freehand sketch then block in the three views together following the general order illustrated in Fig. 470. Work lightly in pencil, and so accurately that dimensions may be put on by scaling the drawing instead of referring to the figure in the book.

1 to 17. Draw three views (Figs. 208, 209 and 211 two views). All are to be full size except 206, 210, 211 and 212 which are to be drawn to proper scale.

Group II. Views to Be Supplied. Probs. 18 to 34.

18 to 25. Figs. 213 to 220. Draw the views given and supply missing view. Full size, except Fig. 220.

26. Fig. 221. Given top and front views. Required top, front and right side views. Full size. Holes to be drawn as approximate ellipses.

27. Fig. 222. Given top and front views. Required top, front and right side views. Scale to suit.

28. Fig. 223. Given top and front views. Required new front, top and side views, turning the block around so that the back becomes the front.

29. Fig. 224. Given front, right side and bottom views. Required front, top and left side views.

30. Fig. 225. Given front, top and right side views. Required right side, rear and bottom views.

31. Fig. 226. Given rear, right side and bottom views. Required front, left side and top views.

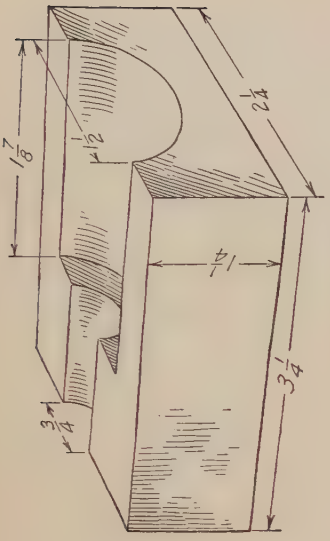

FIG. 197.—Core box.

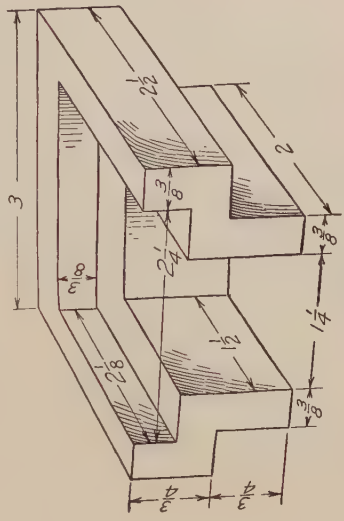

FIG. 199.—Saddle bracket.

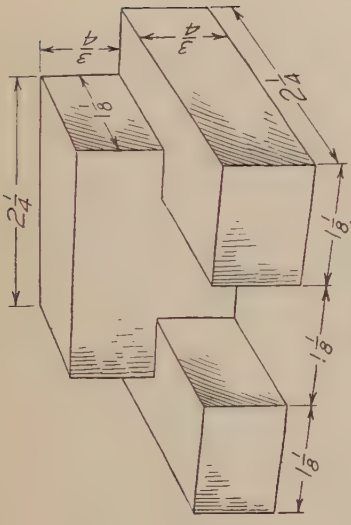

FIG. 196.—Block.

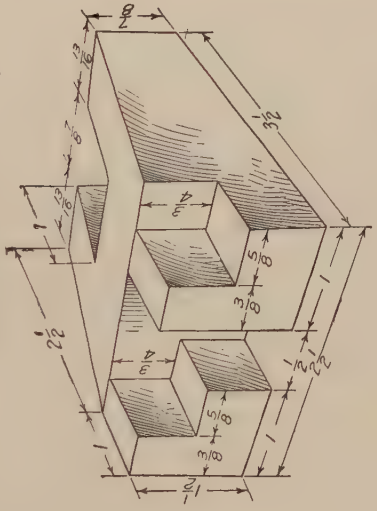

FIG. 198.—Wedge block.

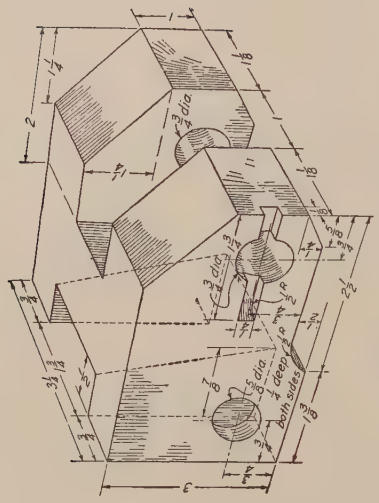

Fig. 201.—Rocker block.

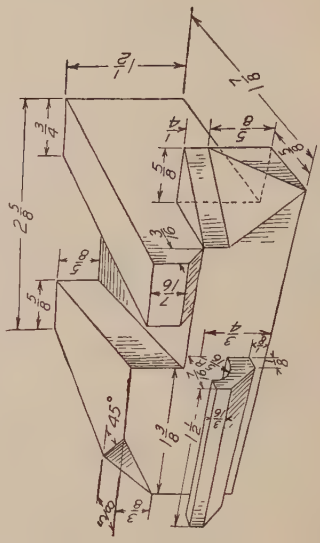

Fig. 203.—Projection study.

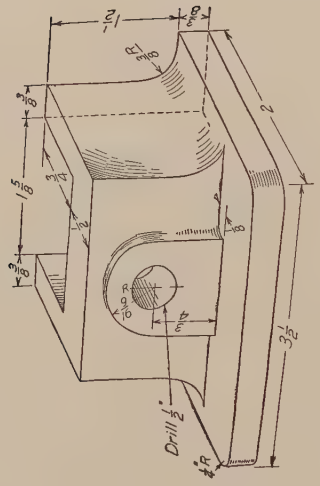

Fig. 200.—Guide base.

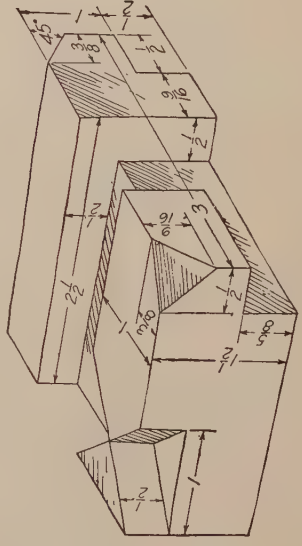

Fig. 202.—Projection study.

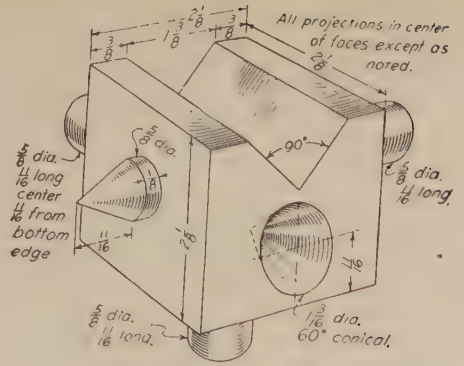

FIG. 204.—Drilling block.

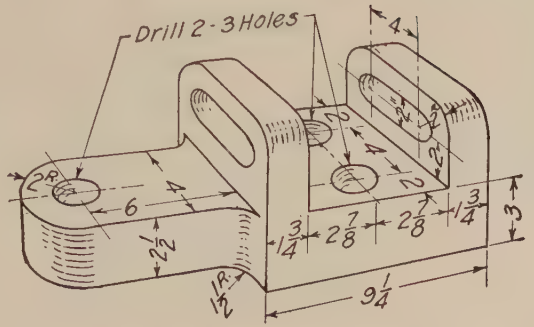

FIG. 206.—Adjusting bracket.

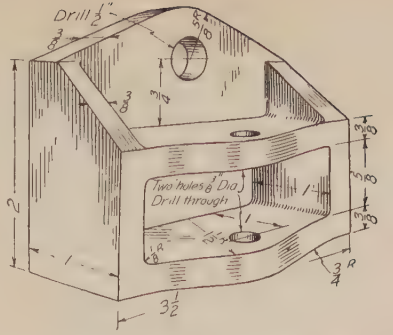

FIG. 205.—Wall bracket.

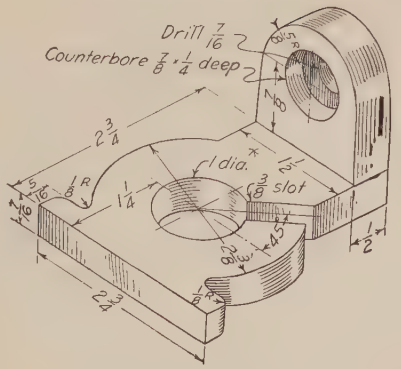

FIG. 207.—Switch base.

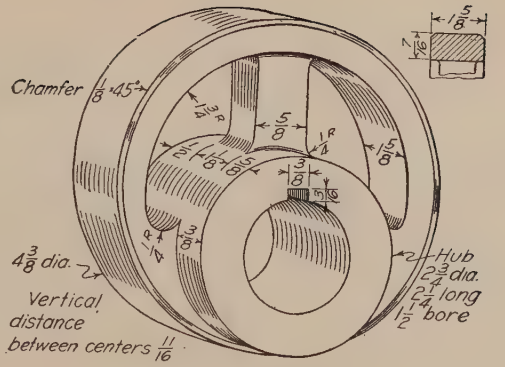

FIG. 208.—Eccentric.

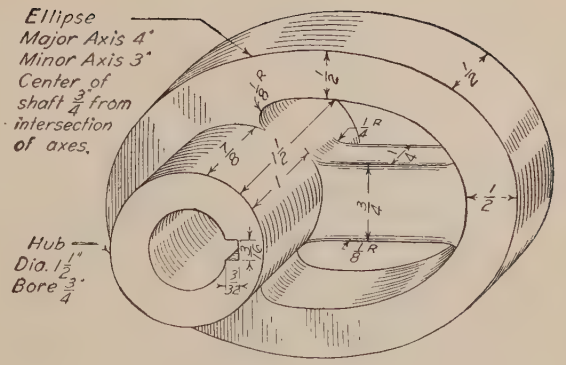

FIG. 209.—Elliptical cam.

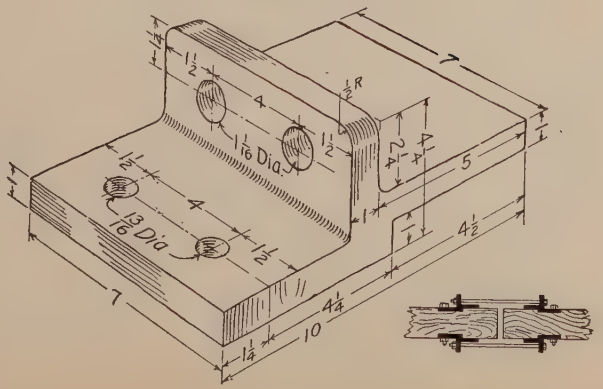

FIG. 210.—Splice plate.

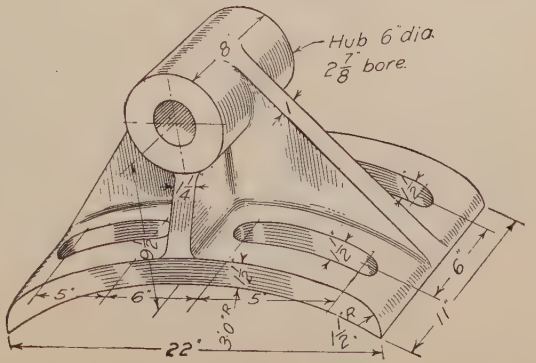

FIG. 211.—Brake shoe.

32. Fig. 227. Given top, front and right side views. Required front, bottom and left side views.

33. Fig. 228. Given top, front and right side views. Required front, bottom, and left side views.

34. Fig. 229. Given rear, bottom and right side views. Required right side, front and top views.

Group III. Auxiliary Problems. Probs. 35 to 48.

35 to 38. Figs. 230 to 233. Draw views given and auxiliary view as indicated.

39 to 47. Figs. 234 to 242. Determine what views and auxiliary part views will best describe the piece. Submit sketch before drawing.

48. Fig. 244. Complete top and front views and draw side view of box in position as shown, using auxiliary view of lid to obtain its projections

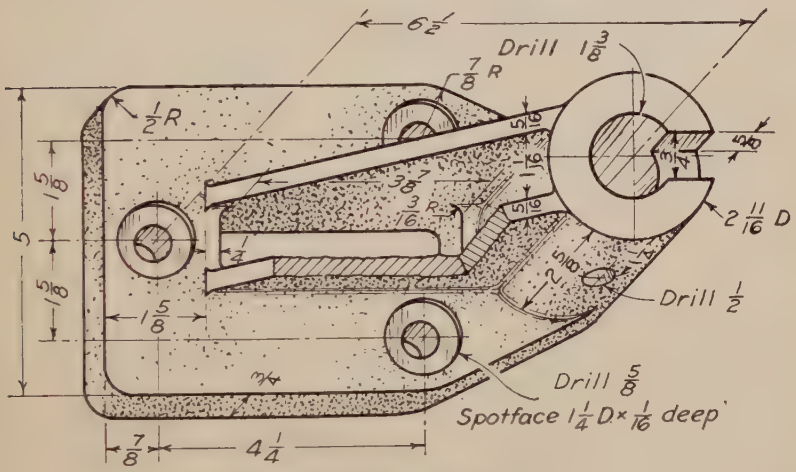

FIG. 212.—Shaft bracket.

Group IV. Revolutions. Prob. 49. Fig. 243.

49. Fig. 243. (1) Draw three views of one of the blocks of Fig. 243 in simplest position. (2) Revolve from position (1) about an axis $\perp H$ through 15°. (3) Revolve from position (2) about an axis $\perp V$ through 45°. (4) Revolve from position (1) about an axis $\perp P$ forward through 30°. (5) Revolve from position (2) about an axis $\perp P$ forward through 30°. (6) Revolve from position (3) about an axis $\perp P$ forward through 30°. (4), (5), and (6) may be placed to advantage under (1), (2) and (3) so that the widths of front and top views may be projected down directly.

Group V. True Lengths. Probs. 50 to 52.

50. Find the true length of the body diagonal of a 2½″ cube.

51. Find true length of an edge of one of the pyramids of Fig. 243.

52. Fig. 245. Find true length of line AB. Make a detail drawing of the brace. Scale to suit.

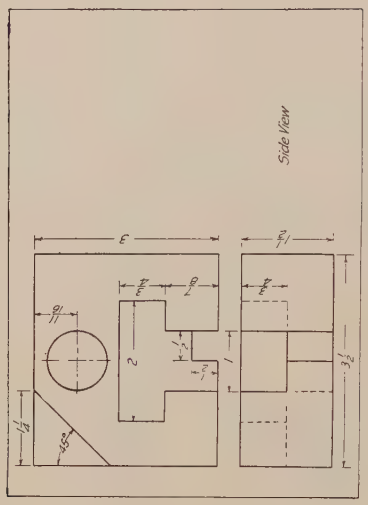

FIG. 214.—Projection study.

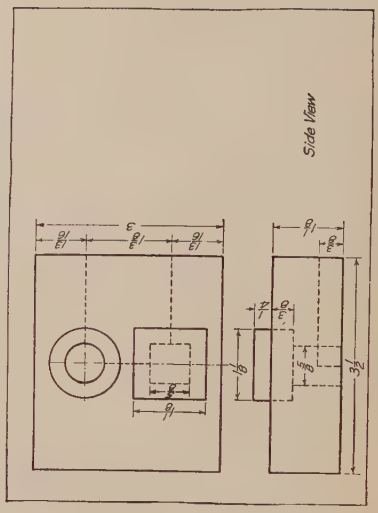

FIG. 216.—Projection study.

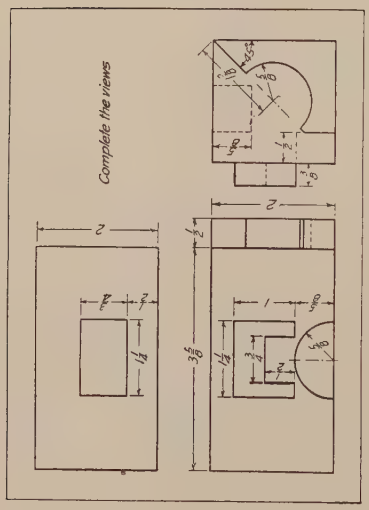

FIG. 213.—Projection study.

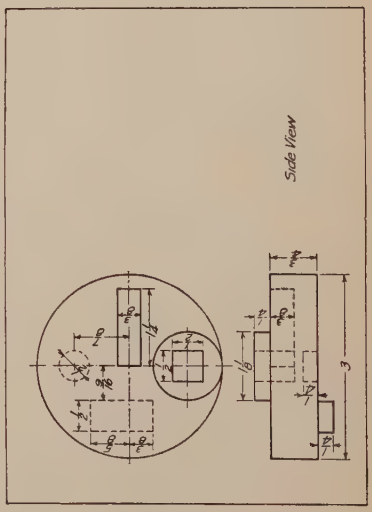

FIG. 215.—Projection study.

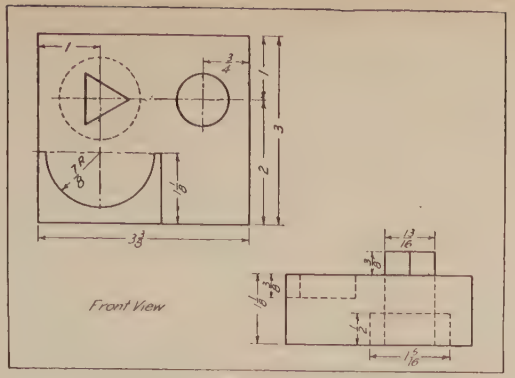

FIG. 217.—Projection study.

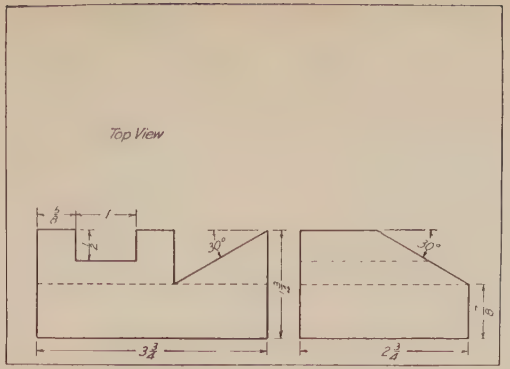

FIG. 218.—Projection study.

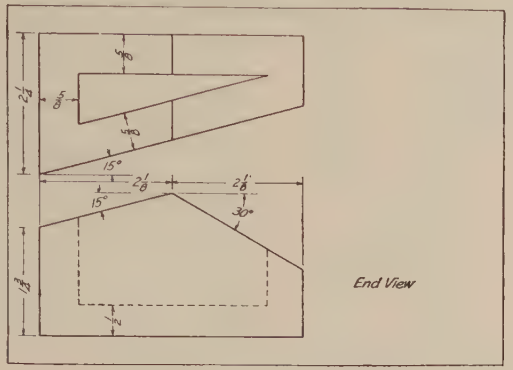

FIG. 219.—Projection study.

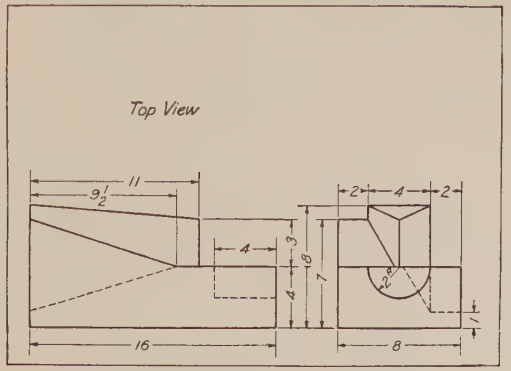

FIG. 220.—Bit point-forming die.

Group VI. Sectional Views. Probs. 53 to 63. Figs. 246 to 256.

53 to 57. Figs. 246 to 250. Draw front view and section.

58. Fig. 251. Draw top view and sectional front view of flange.

59. Fig. 252. Draw front view with lower half in section, and end view in section, of aeronautical engine piston.

60. Fig 253. Draw necessary views, one in section, of slide valve.

61 to 63. Figs. 254 to 256. Draw three views, with sections as indicated.

64. Fig. 257. Draw complete top and front views of manhole cover, front view in half-section. Find tangent points accurately.

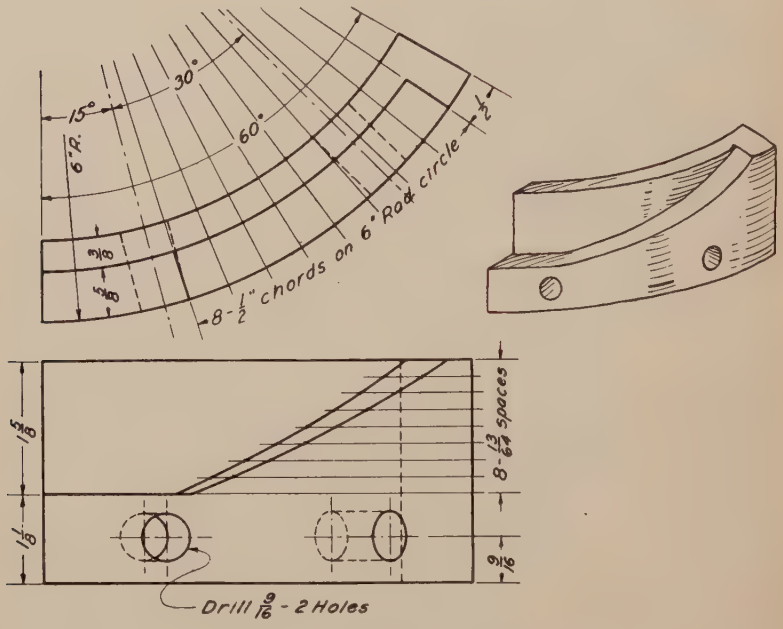

FIG. 221.—Elevating cam.

Group VII. Drawing from Description. Probs. 65 to 75.

65. Draw three views of a pentagonal prism, axis 1½″ long and perpendicular to *H*, circumscribing circle of base 1½″ diam., surmounted by a cylindrical abacus (cap) 2″ diam., ½″ thick.

66. Draw three views of a triangular card each edge of which is 2¾″ long. One edge is perpendicular to *P*, and the card makes an angle of 30° with *H*.

67. Draw three views of a circular card 2½″ diam., inclined 30° to *H*, and perpendicular to *V*. (Find 8 points on the curve.)

68. Draw three views of a cylinder 1½″ diam., 2″ long with hexagonal hole, 1″ long diam, through it. Axis of cylinder parallel to *H* and inclined 30° to *V*.

69. Draw top and front views of a hexagonal plinth whose faces are 1″ square and two of which are parallel to *H*, pierced by a square prism two

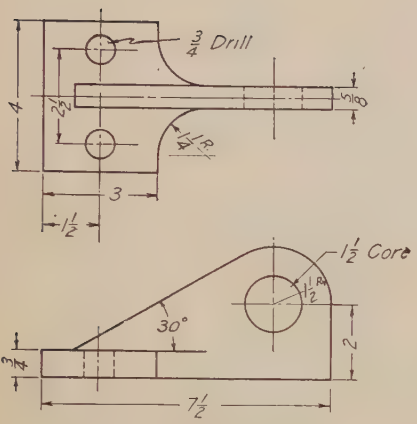

FIG. 222.—Anchor bracket.

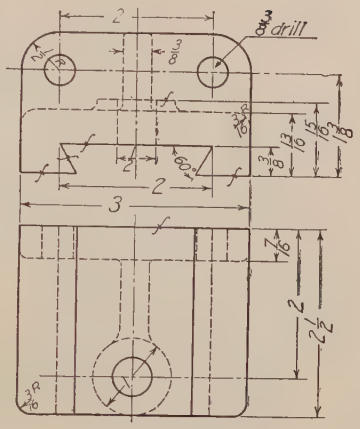

FIG. 223.—Sliding block.

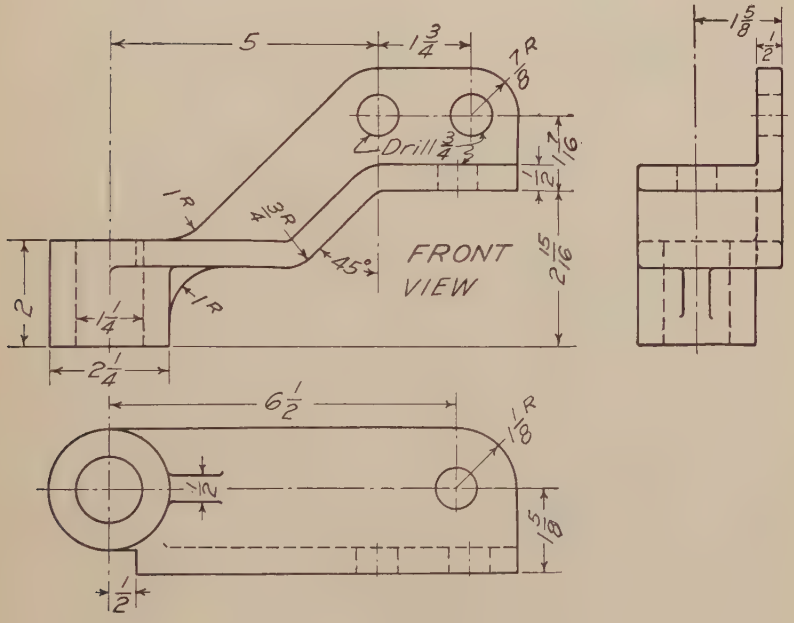

FIG. 224.—Offset bearing bracket.

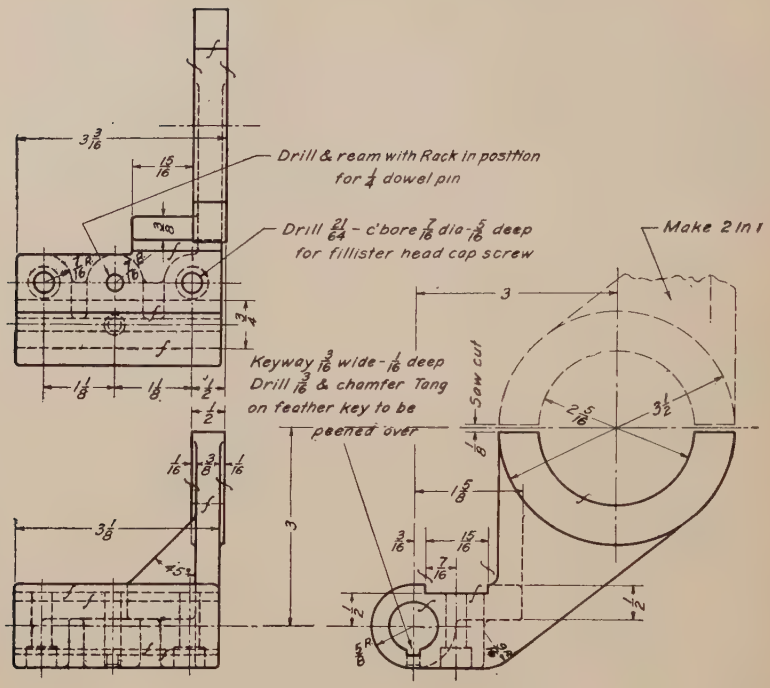
Drill & ream with Rack in position for ¼ dowel pin
Drill 21/64 - c'bore 7/16 dia - 5/16 deep for fillister head cap screw
Make 2 in 1
Keyway 3/16 wide - 1/16 deep
Drill 1/16 & chamfer Tang on feather key to be peened over
Saw cut

FIG. 225.—Shifter fork.

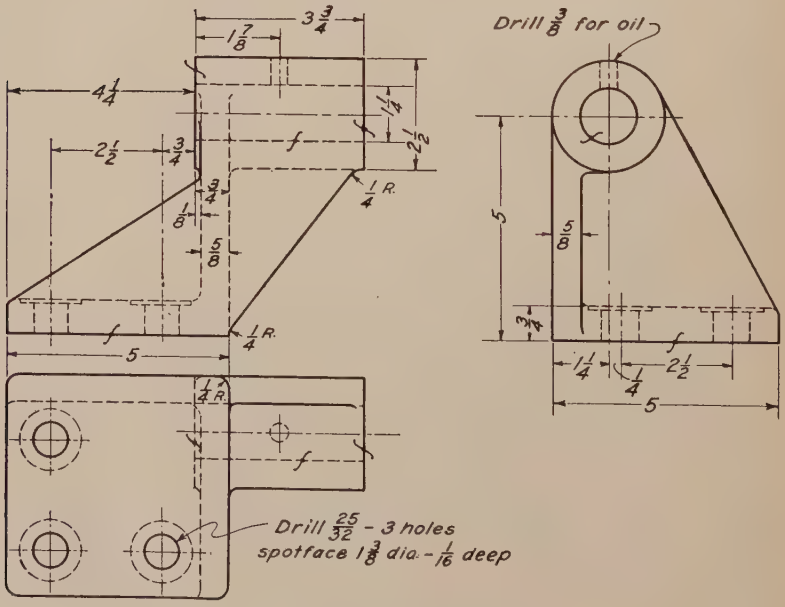

FIG. 226.—Toggle shaft bracket.

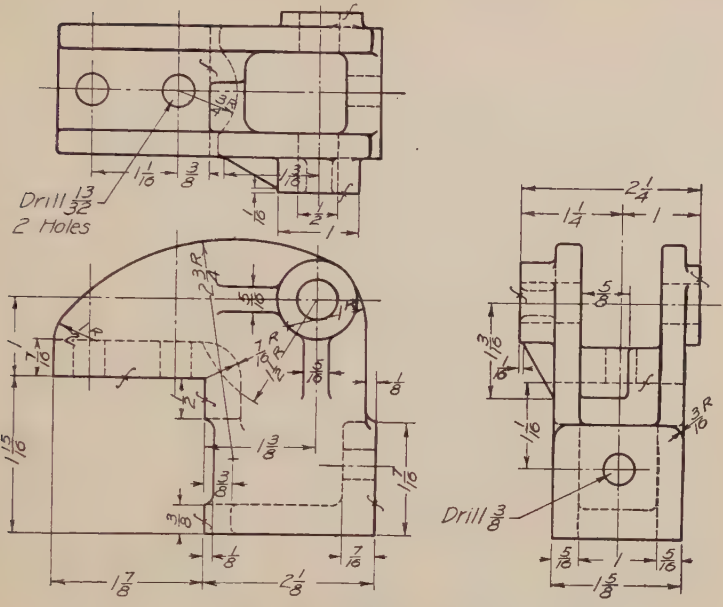

FIG. 227.—Angle bracket.

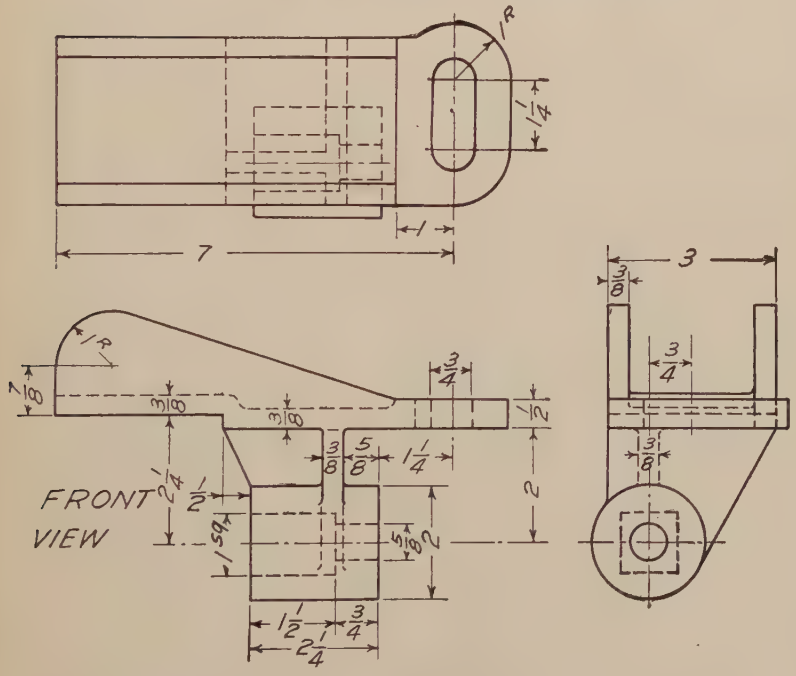

FIG. 228.—Sliding shaft base.

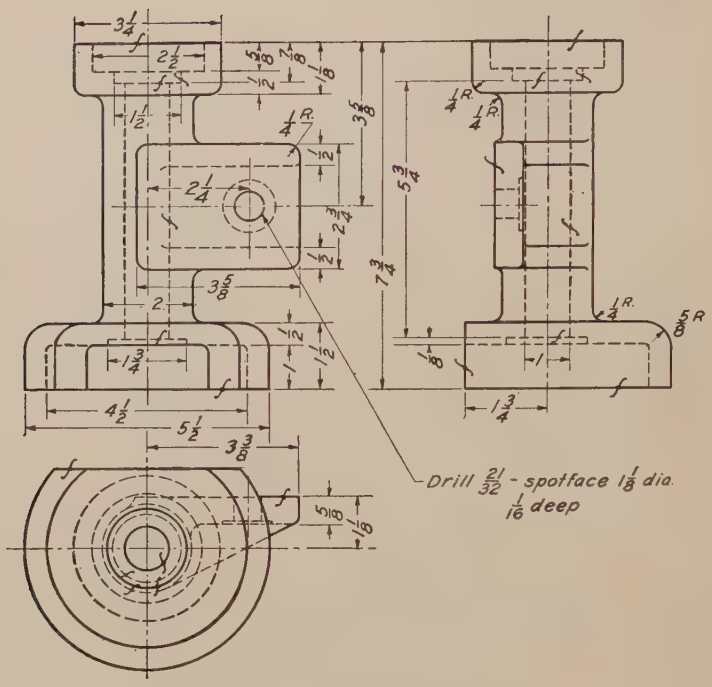

FIG. 229.—Indicator bracket.

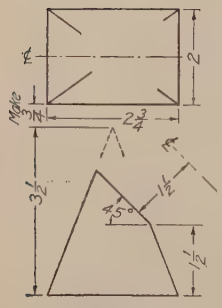

FIG. 230.

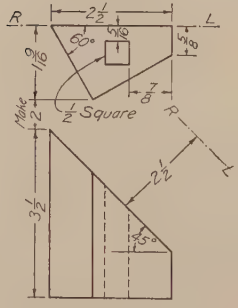

FIG. 231.
Auxiliary studies.

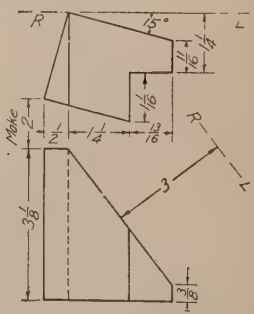

FIG. 232.

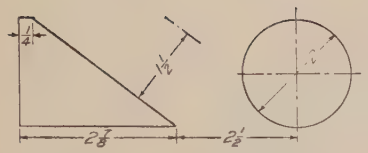

FIG. 233.—Cylinder.

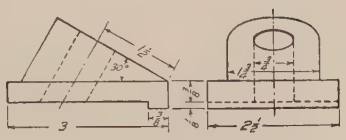

FIG. 234.—Bevel washer.

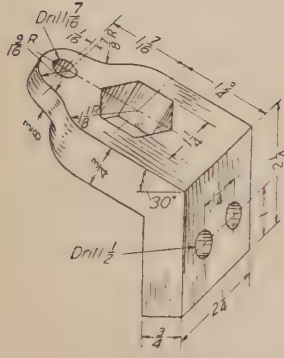

FIG. 235.—Jig angle.

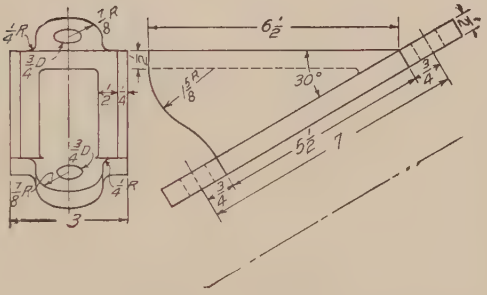

FIG. 236.—Angle bracket.

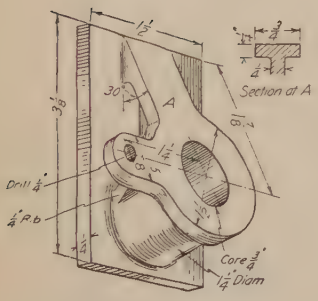

FIG. 237.—Angle shaft base.

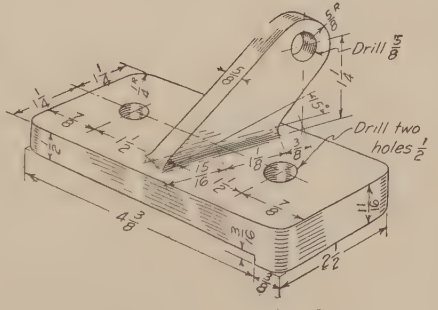

FIG. 238.—Anchor bracket.

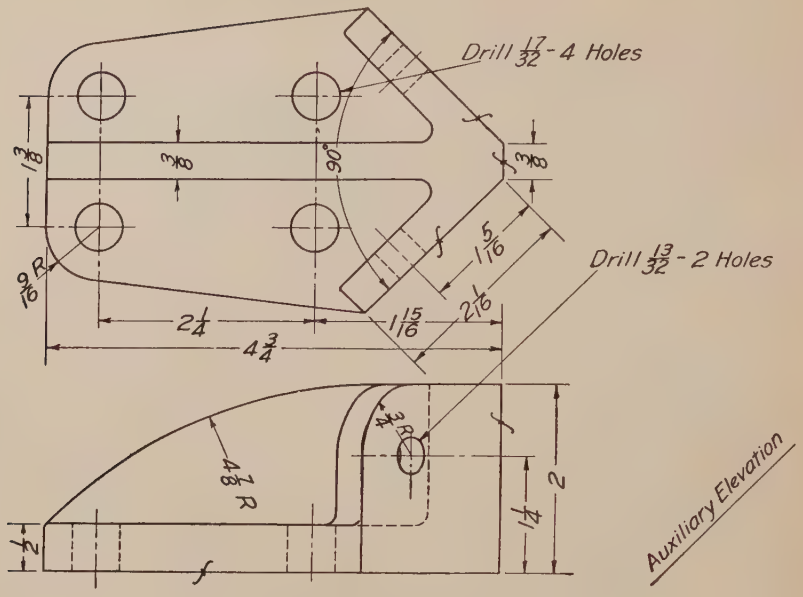

FIG. 239.—Push plate.

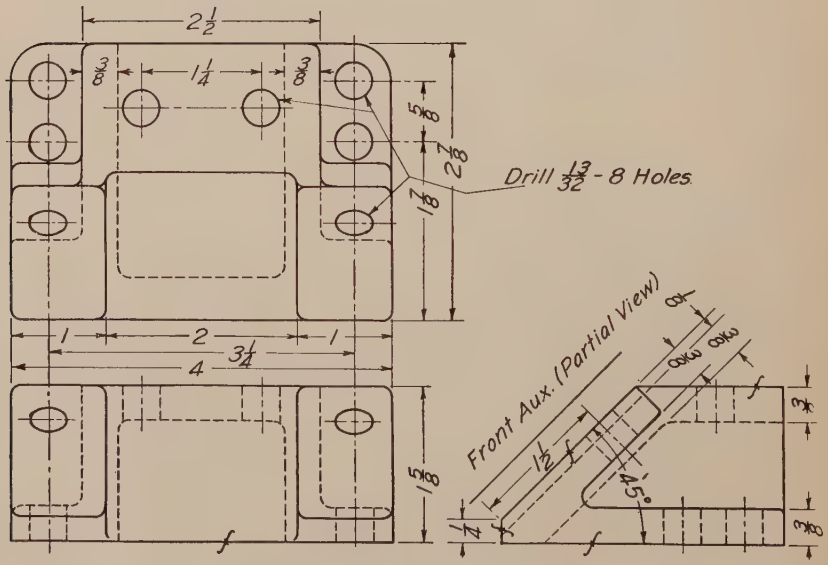

FIG. 240.—Angle support bracket.

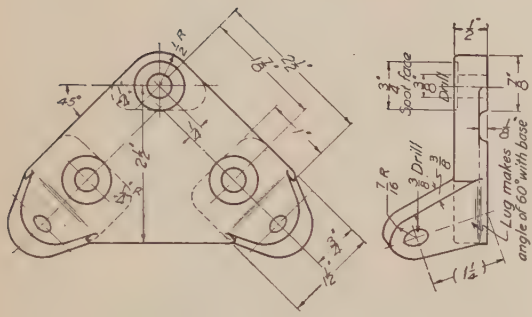

FIG. 241.—Cable anchor.

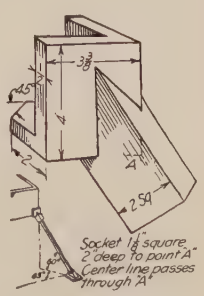

FIG. 242.—Corner bracket.

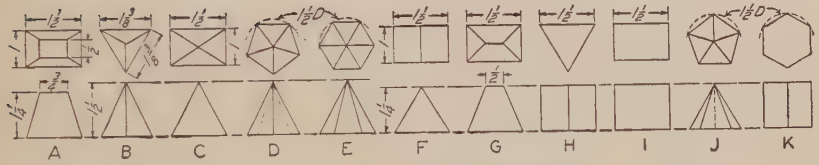

FIG. 243.—Problems in revolution.

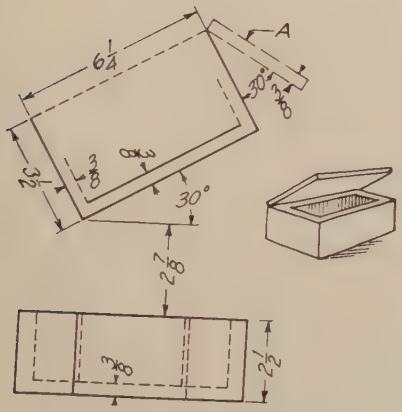

FIG. 244.—Projection study.

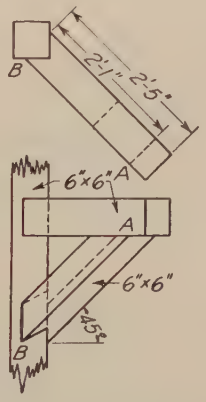

FIG. 245.—Timber brace.

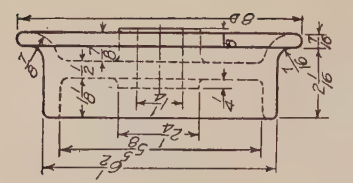

Fig. 246.—Muffler.

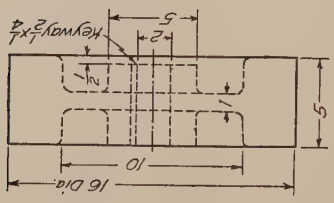

Fig. 247.—Flywheel.

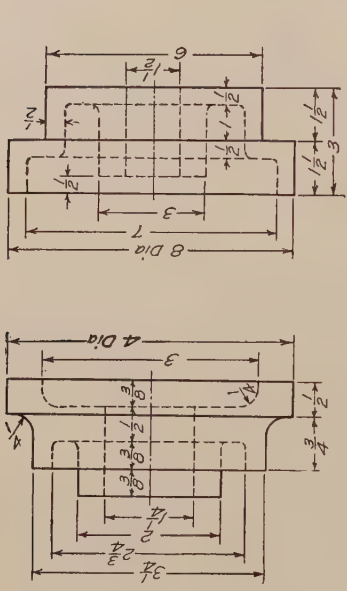

Fig. 248.—Rod guide.

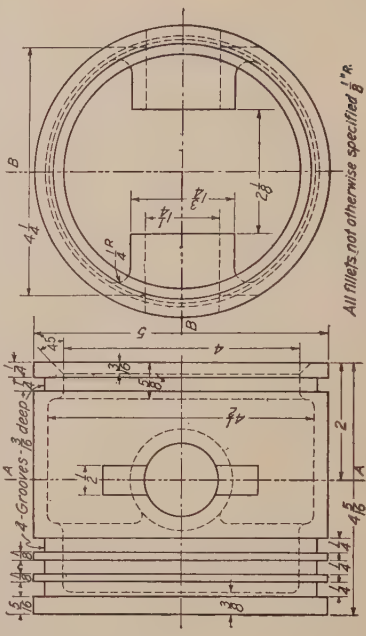

Fig. 249.—Step pulley.

Fig. 250.—Flanged wheel.

Fig. 252.—Aviation engine piston.

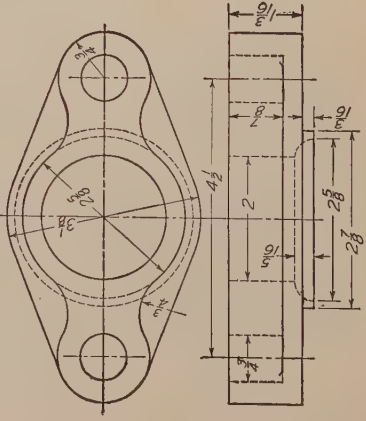

Fig. 251.—Flange.

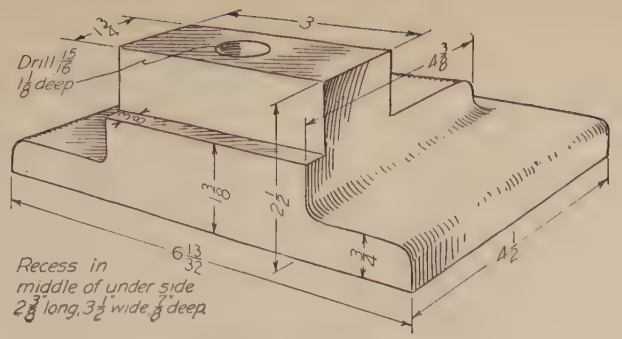

FIG. 253.—Slide valve.

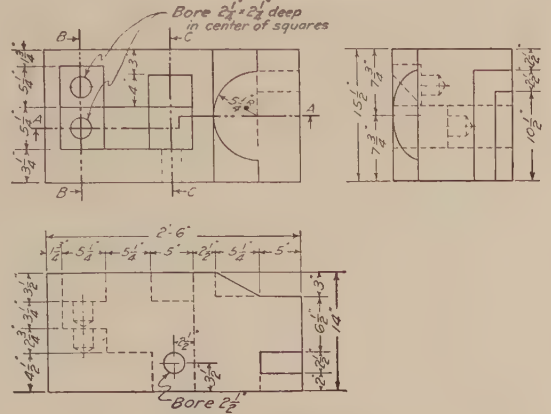

FIG. 255.—Section study.

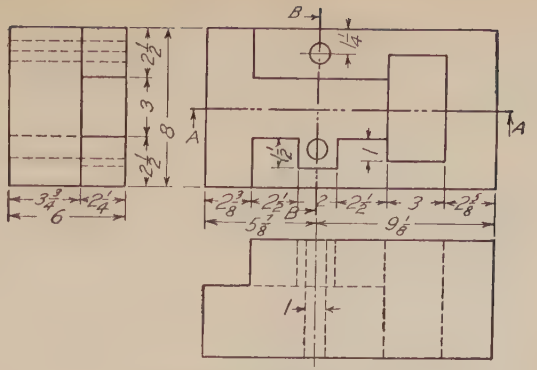

FIG. 254.—Section study.

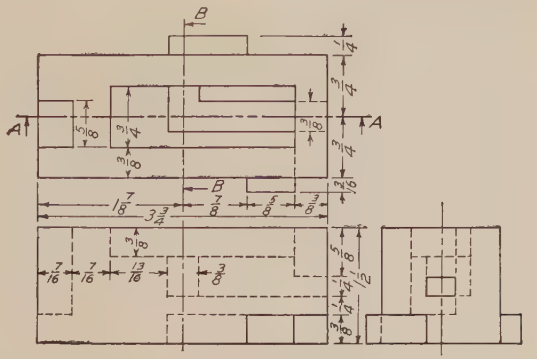

FIG. 256.—Section study.

faces of which are parallel to H, 3″ long, base $\frac{7}{8}$″ square. The axes coincide, are parallel to H, and make an angle of 30° with V. The middle point of the axis of the prism is at the center of the plinth.

70. Draw the two projections of a line 3″ long, making an angle of 30 degrees with V, and whose V projection makes 45° with a horizontal line, the line sloping downward and backward to the left.

71. Draw three views of a square pyramid whose faces are isosceles triangles $1\frac{3}{4}$″ base and $2\frac{1}{4}$″ altitude, lying with one face horizontal, the H projection of its axis at an angle of 30° with the horizontal.

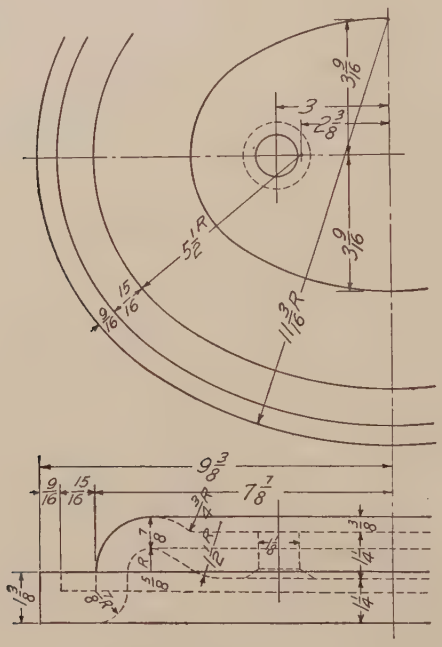

Fig. 257.—Manhole cover.

72. Draw the top and front views of a right rectangular pyramid, base $1\frac{1}{8}$″ × 2″, altitude $1\frac{7}{8}$″, long edges of base parallel to V. By two revolutions place the pyramid so that the short edges are parallel to H and make an angle of 60° with V while the apex is in the same horizontal plane as one of the short edges of the base.

73. Draw three views of a triangular pyramid formed of four equilateral triangles whose sides are $2\frac{1}{4}$″. The base makes an angle of 45° with H, and one of the edges of the base is perpendicular to V.

74. Draw top and front views of a rectangular prism, base 1″ × $1\frac{3}{4}$″ whose body diagonal is $2\frac{1}{2}$″ long. Find projection of prism on an auxiliary plane perpendicular to the body diagonal.

75. Draw the top and front views of a cube whose body diagonal, $2\frac{1}{2}''$ long, is parallel to V. Make an auxiliary projection of the cube on a plane perpendicular to the body diagonal.

Group VIII. Drawing from Memory.

A most valuable exercise is that of training the graphic memory in accuracy and power by drawing from memory. Select an object not previously used, such as one from Fig. 176 or Figs. 196 to 211, look at it with concentration for a certain time (from ten seconds to a minute or more), close the book and make an accurate orthographic sketch. This practice may be varied in many ways that will suggest themselves. If continued faithfully it will strengthen wonderfully the power of observation.

CHAPTER VIII

Pictorial Representation

104. We have noted the difference between perspective drawing and orthographic projection. Perspective drawing shows the object as it appears to the eye, but its lines cannot be measured directly. Orthographic projection shows it as it really is in form and dimensions, but to represent the object completely we have found that at least two projections were necessary, and that an effort of the geometrical imagination was required to visualize it from these views. To combine the pictorial effect of perspective drawing with the possibility of measuring the principal lines directly, several kinds of one-plane projection or conventional picture methods have been devised, in which the third dimension is taken care of by turning the object in such a way that three of its faces are visible. With the combined advantages will be found some serious disadvantages which limit their usefulness. They are distorted until the appearance is often unreal and unpleasant; only certain lines can be measured; the execution requires more time, particularly if curved lines occur, and it is difficult to add many figured dimensions, but with all this, the knowledge of these methods is extremely desirable and they can often be used to great advantage. Mechanical or structural details not clear in orthographic projection may be drawn pictorially, or illustrated by supplementary pictorial views. Technical illustrations, patent office drawings and the like are made advantageously in one plane projection; layouts and piping plans may be shown, as in Fig. 462, and many other applications will occur to draftsmen who can use these methods with facility. One of the uses to which we shall apply them is in testing the ability to read orthographic projections by translating into pictorial representation.

105. Divisions.—Aside from perspective drawing, there are two general divisions of pictorial projection, first *axonometric* with its divisions into isometric, dimetric and trimetric; second, *oblique* projection, with several variations. Other methods not theoretically correct, but effective, are sometimes used.

106. Axonometric projection, as shown in the tabular classification on page 84, is, theoretically, simply a form of orthographic projection in which only one plane is used, with the object so placed in relation to it that a rectangular solid projected on it would show three faces. Imagine a vertical plane with a cube behind it, having one face of the cube parallel to the plane. The projection on the plane will be a square. Rotate the cube about its vertical axis through any angle (less then 90°), the projection will now show two faces, foreshortened. From this position tilt the cube forward any amount less than 90°. Three faces will show on the projection. There are thus an infinite number of axonometric positions, only a few of which are ever used for drawing. The simplest of these is the "isometric" (equal measure) position, where the three faces are foreshortened equally, which is the basis for the isometric system.

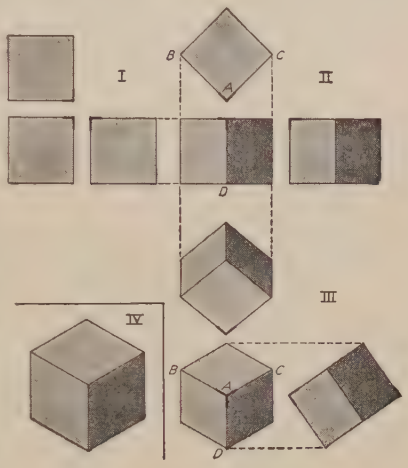

FIG. 258.—The isometric cube.

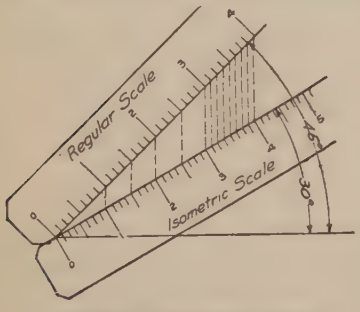

FIG. 259.—Isometric scale.

107. Isometric Projection.—If a cube in orthographic projection as in Fig. 258, I, be conceived as rotated about a vertical axis through 45° as shown at II, then tilted forward as at III, until the edge AD is foreshortened equally with AB and AC, the front view in this position is said to be in *isometric projection.* (The cube has been tilted until the body diagonal from A is horizontal, making the top face slope 35° − 16′ approx.)[1]. The

[1] In paragraph 93 the statement is made that the only difference between revolution and auxiliary projection is that in the former the object is moved and in the latter the plane is moved. Thus an auxiliary view on a plane perpendicular to a body diagonal of the cube in position II would be an isometric projection.

three lines of the front corner, AB, AC and AD make equal angles with each other and are called the "isometric axes." Since parallel lines have their projections parallel the other edges of the cube will be respectively parallel to these axes. Any line parallel to an isometric axis is called an "isometric line." The planes of the faces of the cube and all planes parallel to them are called "isometric planes."

In isometric projection the isometric lines have been foreshortened to approximately $^{81}/_{100}$ of their length, and an isometric scale to this proportion *might* be made as shown in Fig. 259 if it ever became necessary to make an isometric projection to theoretical size.

108. Isometric Drawing.—In all practical use of the isometric system this foreshortening of the lines is disregarded and the full lengths laid off on the axes. This gives a figure slightly larger but of exactly the same shape, and is known as "isometric drawing" (Fig. 258, IV). The effect of increased size is usually of no consequence and as the advantage of measuring the lines directly is of such great convenience isometric drawing is used almost exclusively instead of isometric projection.

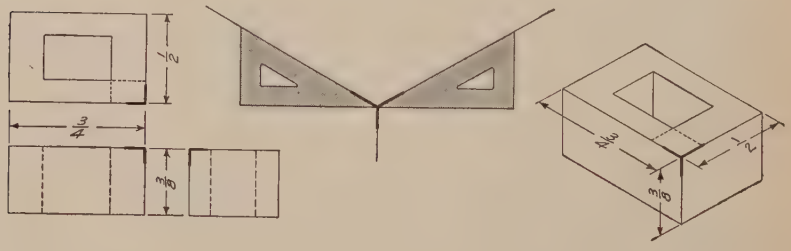

Fig. 260.—Isometric axes. First position.

109. To Make an Isometric Drawing.—If the object is rectangular, start with a point representing a front corner and draw from it the three isometric axes 120° apart, drawing one vertical, the other two with the 30° triangle, Fig. 260. On these three lines measure the length, breadth, and thickness of the object, as indicated, through these points draw lines parallel to the axes, completing the figure. To draw intelligently in isometric it is only necessary to remember the direction of the three principal isometric planes. Hidden lines are always omitted except when necessary for the description of the piece.

It is often more convenient to start from a lower front corner, drawing axes as illustrated in Fig. 261.

Lines not parallel to one of the isometric axes are called non-isometric lines. The one important rule is, *measurements can*

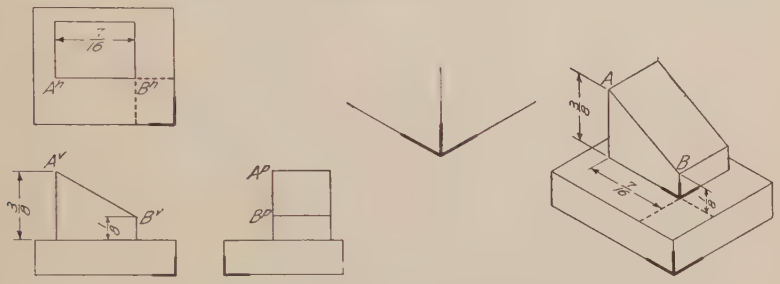

Fig. 261.—Isometric axes. Second position.

be made only on isometric lines; and conversely, measurements cannot be made on non-isometric lines. For example, the diagonals of the face of a cube are non-isometric lines, and although equal in length, will evidently be of very unequal length on the isometric drawing of the cube.

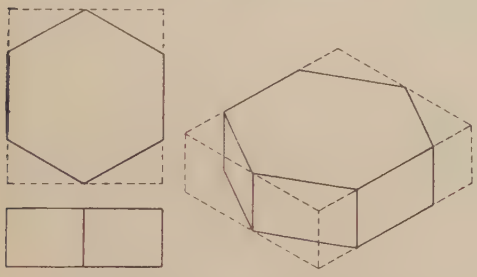

Fig. 262.—Box construction. Prism.

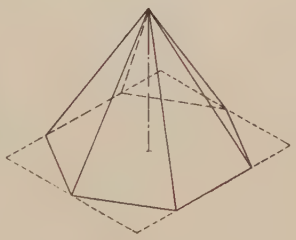

Fig. 263.—Pyramid.

110. Objects Containing Non-isometric Lines.—Since a non-isometric line does not appear in its true length, its extremities must be located and the line found by joining these points. In Fig. 261, AB is a non-isometric line, found by drawing the two perpendicular isometric lines and joining their ends.

When the object contains many non-isometric lines, it is drawn either by the "boxing" method or the "offset" method. In the first method the object is enclosed in a rectangular box, which is drawn in isometric and the object located in it by its points of contact, as in Figs. 262 and 264. It should be noted that lines which are parallel on the object are parallel on the isometric

view. Knowledge of this may often be used to save a large amount of construction, as well as to test for accuracy. Figure 262 might be drawn by putting the top face into isometric and drawing vertical lines equal in length to the edges downward from each corner.

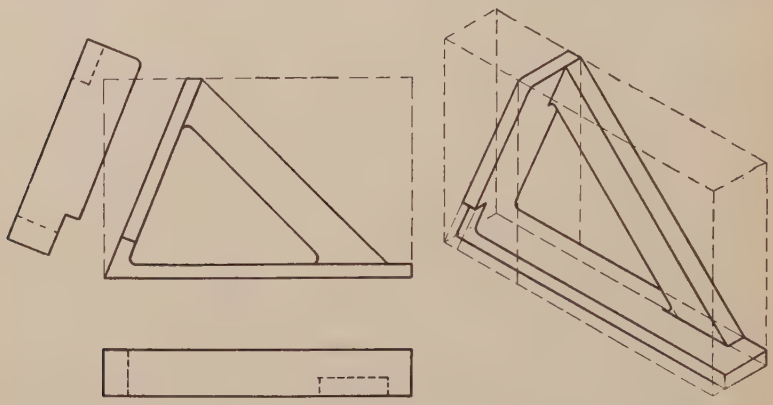

Fig. 264.—Box construction.

It is not always necessary actually to enclose the whole object in a rectangular "crate." The pyramid, Fig. 263, would have its base enclosed in a rectangle and the apex located by erecting a vertical axis from the center.

The object shown in Fig. 264 is composed almost entirely of non-isometric lines. In such cases the isometric view cannot

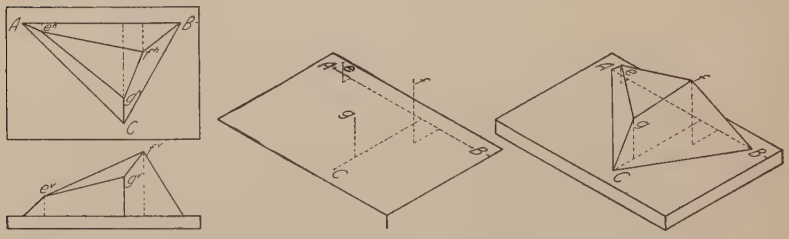

Fig. 265.—Offset construction.

be drawn without first making the orthographic views necessary for boxing. In general the boxing method is adapted to objects which have the non-isometric lines in isometric planes.

Offset Method.—When the object is made up of planes at a number of different angles, it is better to locate the ends of the

edges by the "offset" method. In this method perpendiculars are dropped from each point to an isometric reference plane. These perpendiculars, which are isometric lines, are located

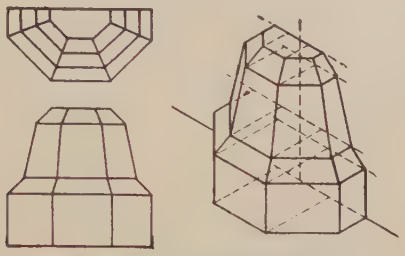

FIG. 266.—Offset construction.

on the drawing by isometric coordinates, the dimensions being taken from the orthographic views. In Fig. 265 the line AB of

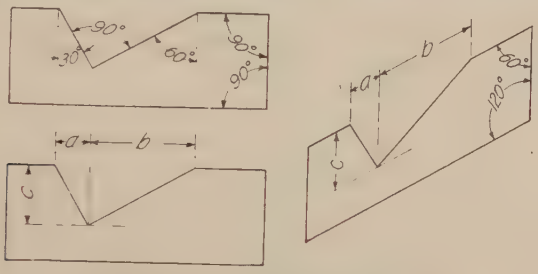

FIG. 267.—Construction for angles.

the figure is used as a base line and measurements made from it as shown. Figure 266 is another example of "offset" construction, working from a vertical plane.

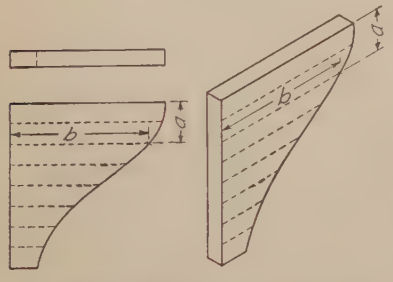

FIG. 268.—Construction for curves.

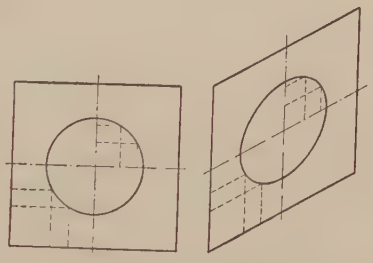

FIG. 269.—Circle, points plotted.

Of course angles in isometric drawing cannot be measured in degrees, so it is necessary to locate the direction of the including

sides by ordinates, as in Fig. 267. This is well illustrated in Fig. 264.

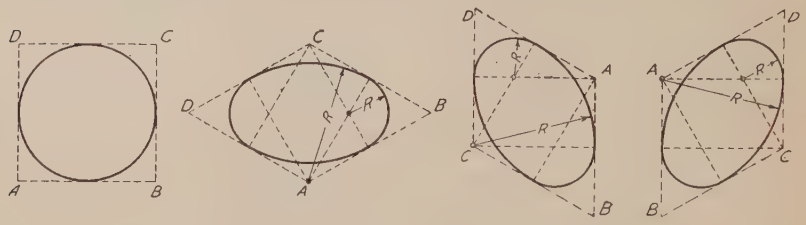

Fig. 270.—Circle—four center approximation.

111. Objects containing Curved Lines.—It is obvious that a circle or any curve on the face of a cube will lose its true shape when the cube is drawn in isometric. A circle on any isometric plane will be projected as an ellipse.

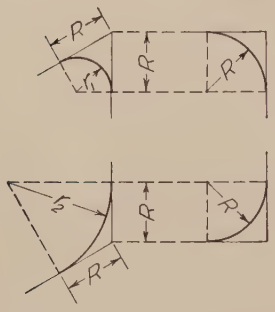

Fig. 271.—Isometric radii.

Any curve may be drawn by plotting points on it from isometric reference lines, as in Fig. 268. A circle plotted in this way is shown in Fig. 269.

112. Isometric circles are usually drawn by a four-centered approximation, which is sufficiently accurate for all ordinary work. The center for any arc tangent to a straight line lies on a perpendicular from the point of tangency. If perpendiculars be drawn from the middle point of each side of the circumscribing square, the intersections of these perpendiculars will be centers for arcs tangent to

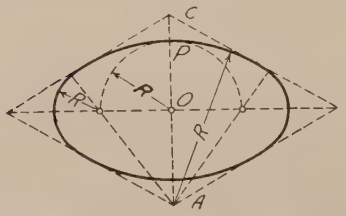

Fig. 272.—The "Stevens Method."

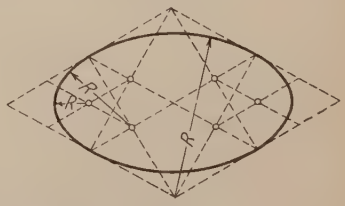

Fig. 273.—Eight center approximation.

two sides, Fig. 270. Two of these intersections will evidently fall at the corners A and C of the square, as the lines are altitudes of equilateral triangles. The construction of Fig. 270 may thus be made by simply drawing 60-degree lines from

the corners, A and C.[1] To draw any circle arc, the isometric square of its diameter should be drawn in the plane of its face, with as much of this construction as is necessary to find centers for the part of the circle needed. Thus for a quarter-

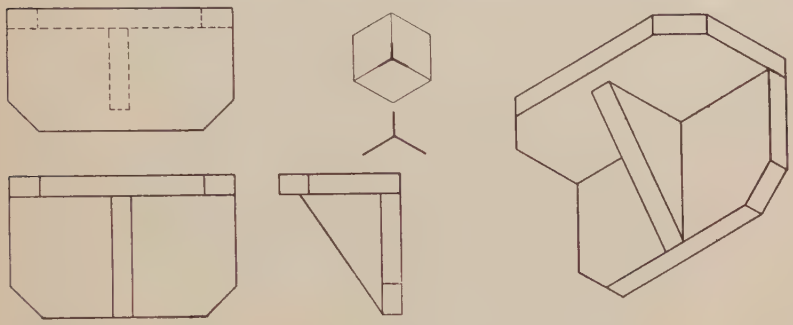

FIG. 274.—Reversed axes.

circle measure the true radius of the circle from the corner on the two isometric lines and draw actual perpendiculars from these

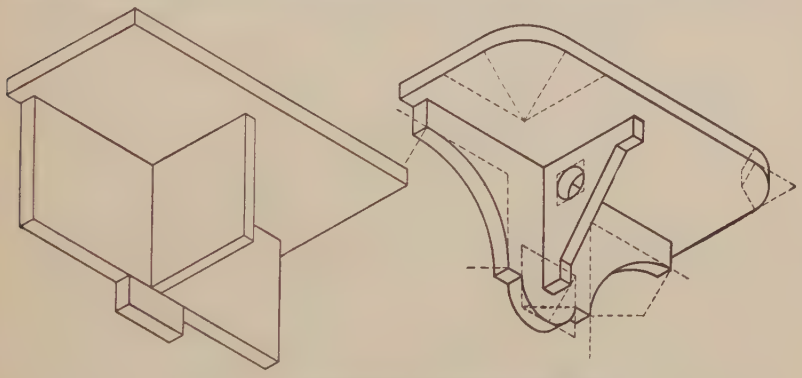

FIG. 275.—Construction with reversed axes.

points, Fig. 271. Their intersection will be the required center for the isometric radius.

[1] NOTE.—If a true ellipse be plotted in the same square as this four-centered approximation it will be a little longer and narrower, and of more pleasing shape, but in the great majority of drawings the difference is not sufficient to warrant the extra expenditure of time required in execution. A closer approximation may be made by the "Stevens method," a very simple four-centered method shown in Fig. 272. Draw the arcs from A and C as before, extending them a little past the tangent point. With O as center and radius OP draw a semicircle intersecting the long diagonal at points to be used as centers for the end arcs.

The construction of an eight-centered approximation is shown in Fig. 273.

The isometric drawing of a *sphere* would be a circle with its diameter equal to the long axis of the ellipse inscribed in the isometric square of the real diameter of the sphere, as this ellipse would be the isometric of a great circle of the sphere.

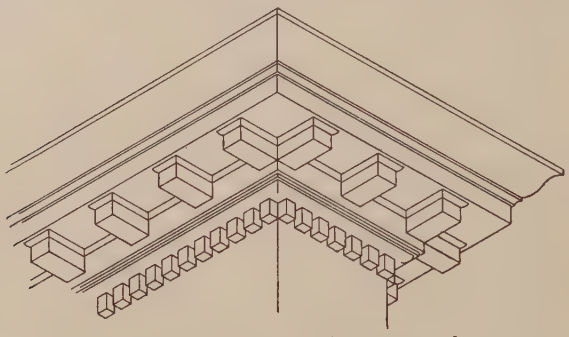

Fig. 276.—Architectural detail on reversed axes.

113. Reversed Axes.—It is often desirable to show the lower face of an object by tilting it back instead of forward, thus

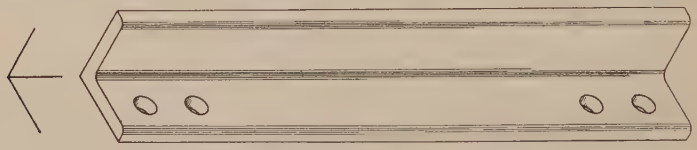

Fig. 277.—Isometric with main axis horizontal.

reversing the axes to the position of Fig. 274. The construction is just the same, but the directions of the principal isometric planes must be kept in mind. Figure 275 shows the application of circle arc construction on the three visible faces of a reversed axis drawing. A practical use of reversed axis construction is in the representation of such architectural features as are naturally viewed from below. Figure 276 is an example.

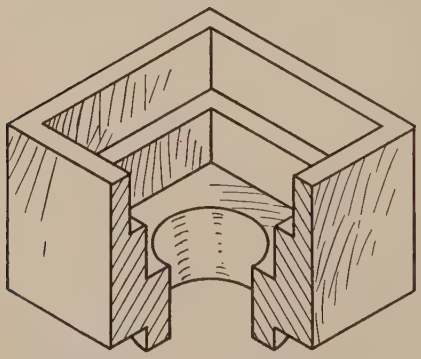

Fig. 278.—Isometric half-section.

Sometimes a piece may be shown to better advantage with the main axis horizontal, as in Fig. 277.

114. Isometric Sections.—Isometric drawings are, from their pictorial nature, usually outside views, but sometimes a sectional

view may be employed to good advantage to show a detail of shape or interior construction. The cutting planes are taken as isometric planes and the section lining done in a direction to give the best effect. As a general rule a half-section would be made by outlining the figure in full, then cutting out the front quarter by two isometric planes as in Fig. 278, while for a full section, the cut face would be drawn first and the part of the object behind it added afterward, Fig. 279.

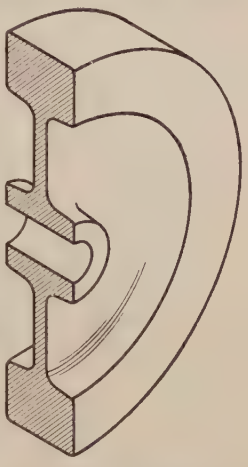

FIG. 279.—Isometric section.

115. Dimetric Projection.—The reference cube might be revolved into any number of positions where two edges would be equally foreshortened, and the direction of axes and proportion of foreshortening of any one of these positions might be taken as a basis for a system of dimetric drawing. A simple dimetric position is one with the ratios 1:1:½. In this position the tangents of the angles are ⅛ and ⅞, making the angles approximately 7 and 41 degrees. Figure 280 shows a drawing in this system, and Fig. 725 a convenient special triangle for it.

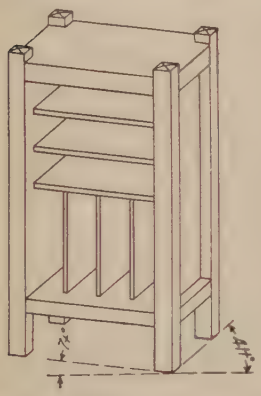

FIG. 280.—Dimetric projection.

116. Trimetric Projection.—Any position with three unequal axes would be called trimetric. While with some of these positions the effect of distortion might be lessened, the added time required makes trimetric drawing impractical. The nearest approach to it is in clinographic projection, a special oblique form described on page 136.

117. Oblique Projection.—When the projectors make an angle other than 90 degrees with the picture plane the resulting projection is called oblique projection. (Refer to the tabular classification on page 84.) The projectors are usually taken at 45 degrees, to which the special name of cavalier projection is given although it is often called by the general name oblique projection or oblique drawing. The principle is as follows:

Imagine a vertical plane with a rectangular block behind it, having its long edges parallel to the plane. Assume projecting lines making an angle of 45° with the picture plane, in any direction (they could be parallel to any one of the elements of a 45° cone with its base in V). Then the face of the block

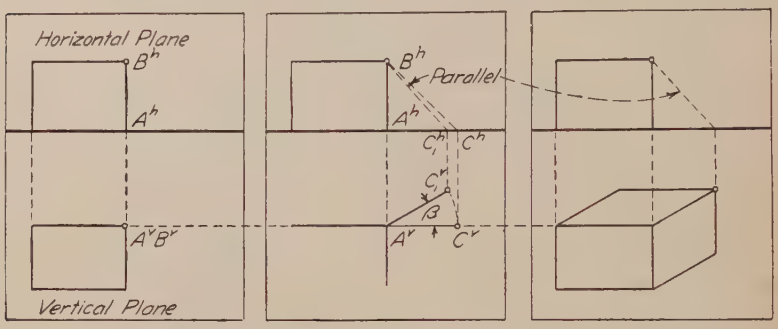

Fig. 281.—Oblique projection and the picture plane.

parallel to the plane would be projected in its true size and the edges perpendicular to the plane would be projected in their true length. Figure 281 illustrates this principle. The first panel shows the regular orthographic projection of a rectangular block with its front face in the vertical plane. An oblique projector from the back corner B will be the hypotenuse of a 45° right triangle of which AB will be one side and the projection of AB on the plane the other side. When this triangle is horizontal the projection on the plane will be AC. If the triangle be revolved about AB to any angle B, C will revolve to C_1 and $A^v C_1{}^v$ will be the oblique projection of AB. Since $A^v C^v = A^h C^h$, $A^v C^v = AB$.

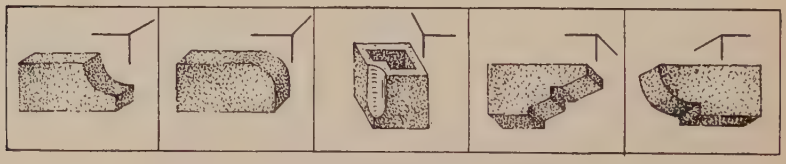

Fig. 282.—Various positions of oblique axes.

118. To Make an Oblique Drawing.—Oblique drawing is similar to isometric drawing in having three axes representing three mutually perpendicular lines upon which measurements can be made. Two of the axes would always be at right angles to each other, being in a plane parallel to the picture plane.

The third or cross-axis may be at any angle, 30 degrees or 45 degrees being generally used. It is thus more flexible than isometric drawing. See Fig. 282. For a rectangular object, Fig. 283, start with a point representing a front corner and draw from it the three oblique axes. On these three lines measure the length, breadth and thickness of the object.

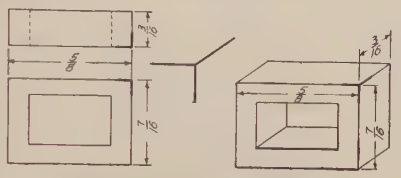

Fig. 283.—Oblique drawing.

Any face parallel to the picture plane will evidently be projected without distortion, an advantage over isometric of particular value in the representation of objects with circular or

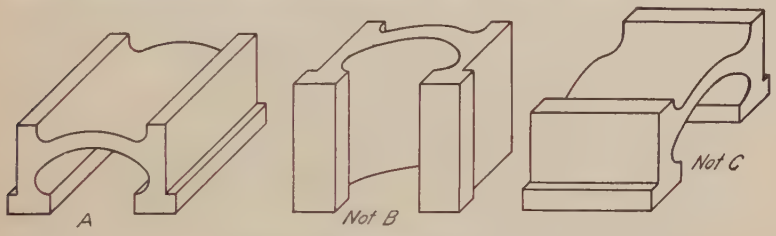

Fig. 284.—Illustration of first rule.

irregular outline. The **first rule** for oblique projection is, *place the object with the irregular outline or contour parallel to the picture plane.* Note in Fig. 284 the distortion of *B* and *C* over that of *A*.

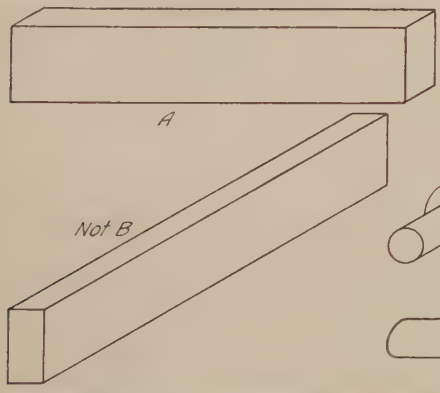

Fig. 285.—Illustration of second rule.

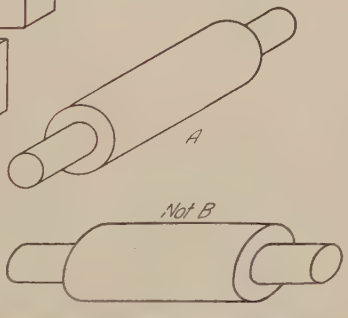

Fig. 286.—Precedence of first rule.

One of the greatest disadvantages in the use of either isometric or oblique drawing is the effect of distortion produced by the

lack of convergence in the receding lines—the violation of perspective. This in some cases, particularly with large objects becomes so painful as practically to prohibit the use of these methods. It is perhaps even more noticeable in oblique than in isometric, and, of course, increases with the length of the cross-axis. Hence, the **second rule,** *Preferably have the longest dimension parallel to the picture plane.* In Fig. 285, *A* is preferable to *B*.

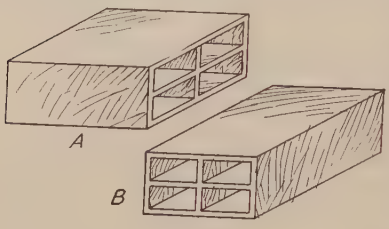

Fig. 287.

In case of conflict between these two rules the first should always have precedence, as the advantage of having the irregular face without distortion is greater than that gained by the second rule, as illustrated in Fig. 286. The precedence of the first rule should be followed even with shapes that are not irregular if in the draftsman's judgment the distortion can be lessened, as in the example of Fig. 287, where *B* is perhaps preferable to *A*.

119. It will be noted that so long as the front of the object is in one plane parallel to the plane of projection, the front face

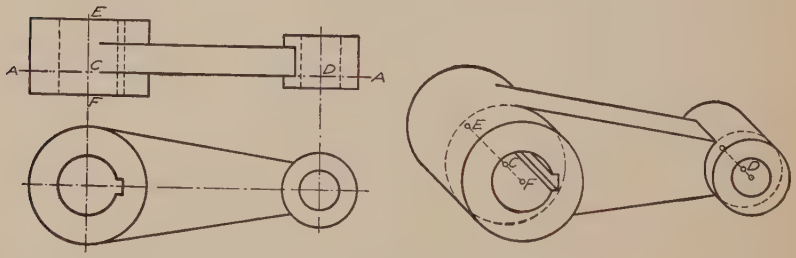

Fig. 288.—Offsets from reference plane.

of the oblique projection is exactly the same as the orthographic. When the front is made up of more than one plane, particular care must be exercised in preserving the relationship by selecting one as the starting plane and working from it. In such a figure as the link, Fig. 288, the front bosses may be imagined as cut off on the plane *A*-*A*, and the front view, *i.e.*, the section on *A*-*A* drawn as the front of the oblique projection. On axes through the centers *C* and *D* the distances *CE* behind and *CF* in front may be laid off. When an object has no face perpendic-

ular to its base it may be drawn in a similar way by cutting a right section and measuring offsets from it as in Fig. 289.

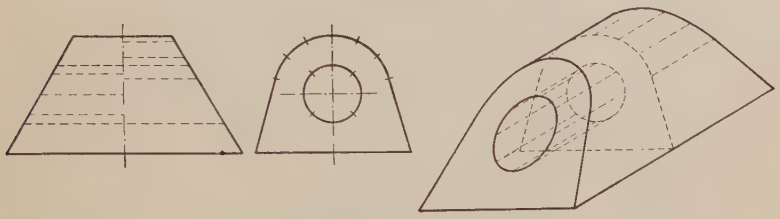

Fig. 289.—Offsets from right section.

This offset method, previously illustrated in the isometric drawings, Figs. 265 and 266, will be found to be a most rapid and convenient way for drawing almost any figure, and it should be studied carefully.

When necessary to draw circles on oblique faces they may either be plotted, or may be drawn approximately, on the same principle as Fig. 270, by erecting perpendiculars at the middle points of the containing square. In isometric it happens that one intersection falls in the corner of the square, and advantage is taken of the fact. In oblique its position depends on the angle of the cross-axis. Figure 290 shows three oblique squares at different angles and their inscribed circles.

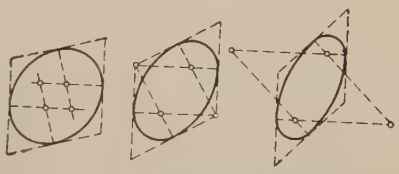

Fig. 290.—Oblique circle construction.

120. Cabinet drawing is an oblique projection assumed from such direction that all measurements parallel to the cross-axis

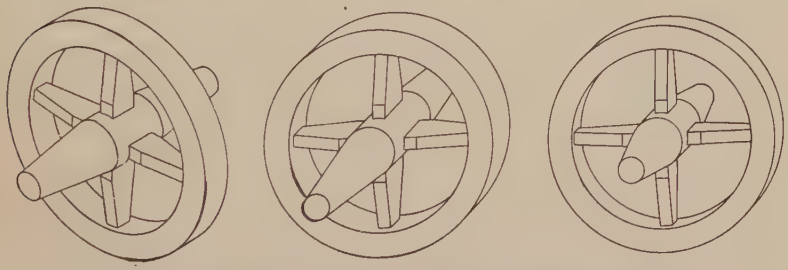

Fig. 291.—Isometric, oblique and cabinet drawing compared.

are reduced one-half, so as to overcome the appearance of excessive thickness produced in cavalier projection. The cross-

axis may be at any angle, but is usually taken either 30° or 45°. The comparative appearance of isometric, cavalier or oblique, and cabinet drawing is illustrated in Fig. 291.

121. Other Forms.—Cabinet drawing, explained above, is popular because of the easy ratio, but the effect is often too thin.

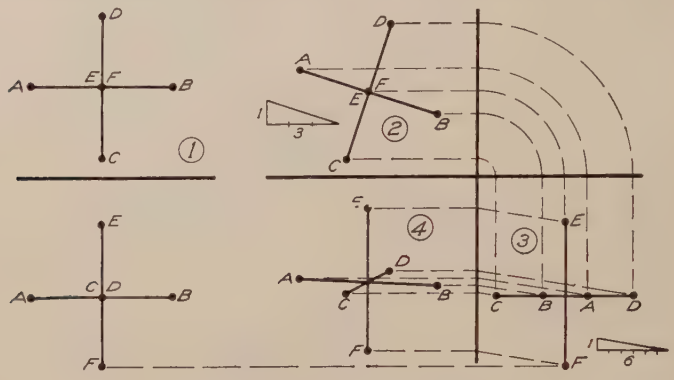

Fig. 292.—Analysis of clinographic axes.

Other oblique drawing ratios such as $\frac{2}{3}$ or $\frac{3}{4}$ may be used with pleasing effect.

Pictorial drawings are sometimes made without reference to the theory of projection, on axis combinations of 15° and 30°, 15° and 45°, 15° and 15°, 20° and 20°.

122. Clinographic Projection.—This system was devised for the drawing of crystal figures in mineralogy to get a position in which no faces of the

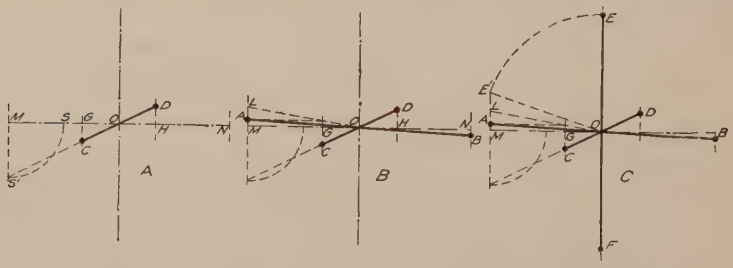

Fig. 293.—Stages of construction of clinographic axes.

many crystal forms would be projected as a line. It is a form of oblique projection in which the figure is imagined as revolved about a vertical axis through an angle whose tangent is $\frac{1}{3}$, then the eye (at an infinite distance) elevated through an angle whose tangent is $\frac{1}{6}$. Figure 292 is a graphic explanation: 1 represents the top and front views of the three axes of a

cube; 2 is the top view revolved through the angle whose tangent is $\frac{1}{3}$; 3 is the side view of 2; 4 is a front view projected from 3 and 2, the projection from 3 being at the angle whose tangent is $\frac{1}{6}$.

When used in crystallography a diagram of the axes is usually constructed very accurately on cardboard, and used as a templet or stencil, transferring the center and terminal points by pricking through to the sheet on which the drawing is to be made. Figure 293 shows, in stages, a method of constructing this diagram, which as will be seen is simply a combination in one view of 2, 3, and 4 of Fig. 292. Take *MON* of convenient length, divide it into three equal parts, at *G* and *H*, and draw perpendiculars as shown. Make $MS = \frac{1}{2}\ MO$ and draw *S'OD*. Then *CD* will be one horizontal axis. Make $ML = \frac{1}{2}\ OG$ and draw *LO*. Project the point of intersection of *LO* and *GC* back horizontally to *LM* at *A*, then *AOB* will be the other horizontal axis. To obtain length of vertical axis make $ME = OG$, and lay off *OE* and *OF* equal to *OE*.

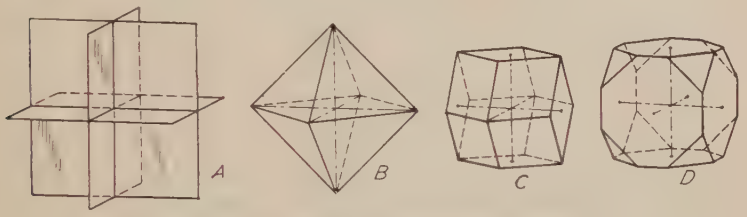

FIG. 294.—Crystals in clinographic projection.

The axial planes, and some crystals drawn on these axes, are shown in Fig. 294.

These axes are for the isometric system of crystals. Axes for the other crystal systems may be constructed graphically in the same way, by drawing their orthographic projections, revolving, and projecting to the vertical plane with oblique projectors as was done in Fig. 292.

123. Sketching.—One of the valuable uses of pictorial drawing is in making freehand sketches, either dimensioned to form working drawings or for illustrating some object or detail of construction. The following points should be observed:

1. Keep the axes flat. The beginner's mistake is in getting the axes too steep, thereby spoiling the appearance of his sketch.
2. Keep parallel lines parallel.
3. Keep vertical lines vertical.
4. Always block in squares before sketching circles.
5. In isometric drawing remember that a circle on the top face will be an ellipse with its axis horizontal.
6. Do not confuse the drawing with dotted lines.
7. Always keep dimension and extension lines in the same plane as the part dimensioned, and have the figures so drawn

that they appear to lie in the plane of the face. Numerous examples of pictorial dimensioning will be found, such as Figs. 196 to 211. Read paragraph 240 on page 303.

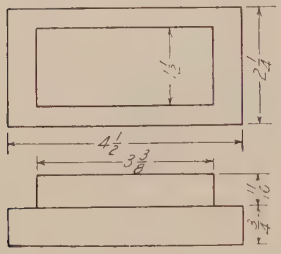

Fig. 295.—Jig block.

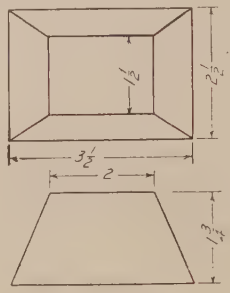

Fig. 296.—Frustum of pyramid.

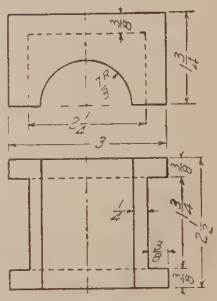

Fig. 297.—Bearing brass.

PROBLEMS

124. The following problems are intended to serve two purposes; they are given first, for practice in the various methods of pictorial representation; second, for practice in reading and translating orthographic projections.

In reading a drawing remember that a line on any view always means a corner or edge, and that one must always look at another view to find out what kind of corner it is. Do not try nor expect to be able to read a whole drawing at one glance.

The problems may be drawn to the sizes given in a space 5″ × 7″. For larger sheets the scale may be increased. They are arranged in groups for convenience in selection and assignment. Some of the figures in Chapter VII may be used for a still further variety of problems in this connection.

Do not show invisible lines except when necessary to explain construction.

Group I. Figs. 295 to 316. **Isometric Drawing. Probs. 1 to 22.**

Group II. Figs. 317 to 324. **Isometric Sections. Probs. 23 to 30.** Draw isometric sections or half sections as indicated.

31, 32, 33. Figs. 254, 255, 256. Draw isometric section on plane *AA*.

Group III. Figs. 325 to 341. **Oblique Drawing. Probs. 34 to 50.**

Group IV. Oblique Sections. Probs. 51 to 55. Draw oblique sections of Figs. 246 to 250. **Prob. 56.** Draw oblique half section of Fig. 252.

Group V. Figs. 342 to 345. **Cabinet and Dimetric Drawing. Probs. 57 to 60.**

Group VI. Figs. 346, 347, 348. **Reading Exercises.**—These figures are to be sketched freehand in one of the pictorial systems as a test in the ability to read orthographic projections. They may also be used as reading problems by requiring other orthographic views. In the last row (*AA* to *EE*) each problem has several solutions.

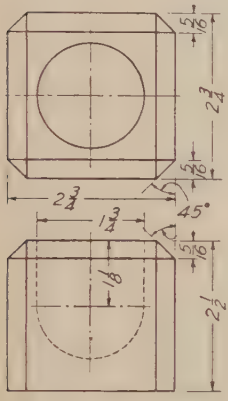

Fig. 298.—Inkstand.

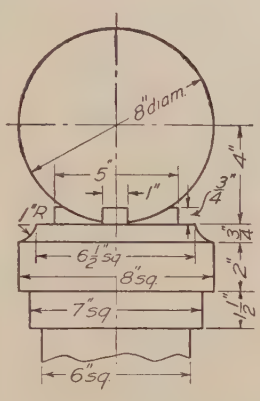

Fig. 299.—Ball finial.

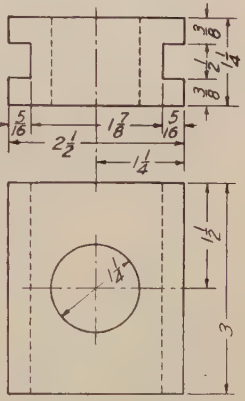

Fig. 300.—Sliding shoe.

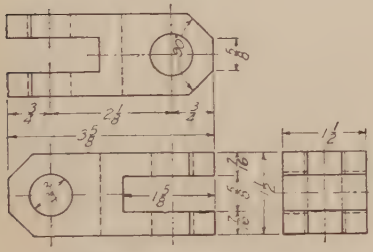

Fig. 301.—Swivel block.

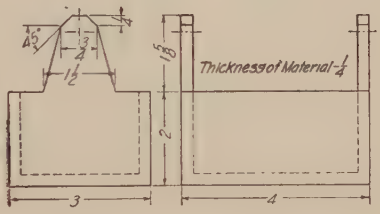

Fig. 302.—Hanging box.

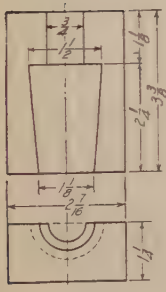

Fig. 303.—Core box.

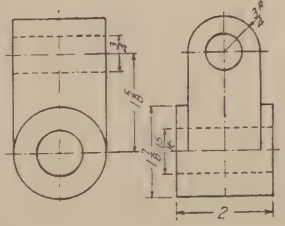

Fig. 304.—Cross link.

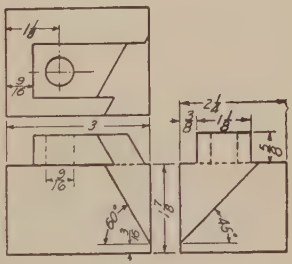

Fig. 305.—Wedge block.

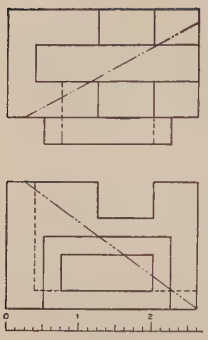

FIG. 306.—Section study.

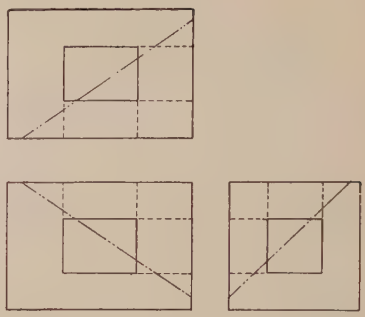

FIG. 307.—Section study.

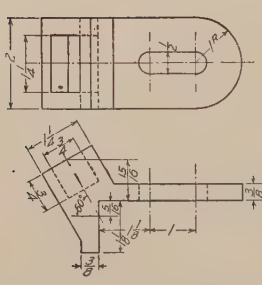

FIG. 308.—Strut anchor.

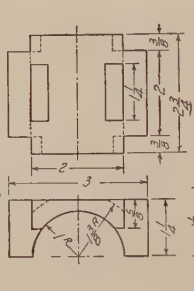

FIG. 309.—Bearing bronze.

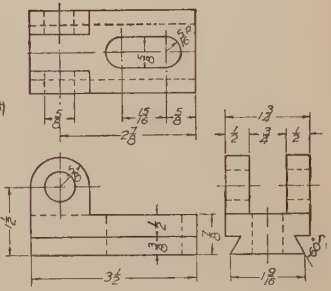

FIG. 310.—Dovetail bracket.

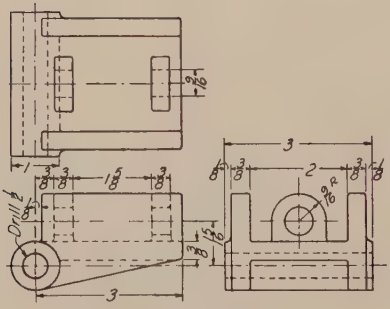

FIG. 311.—Swing plate.

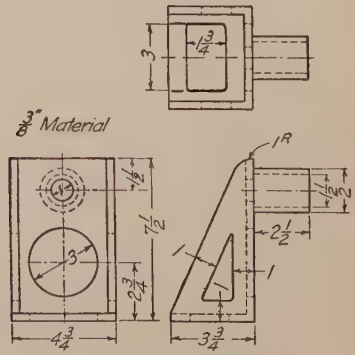

FIG. 312.—Joist hanger.

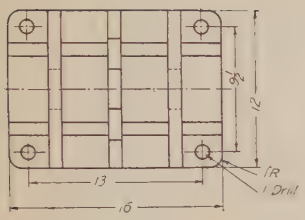

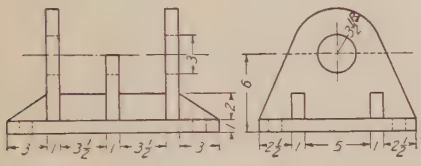

Fig. 313.—Hinged shoe.

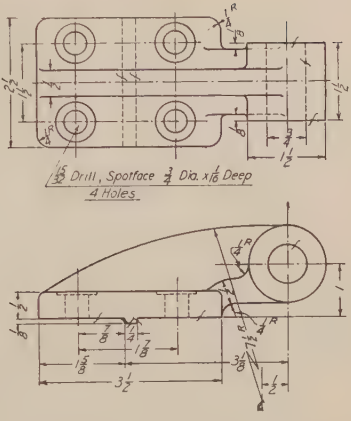

Fig. 314.—Offset side bracket.

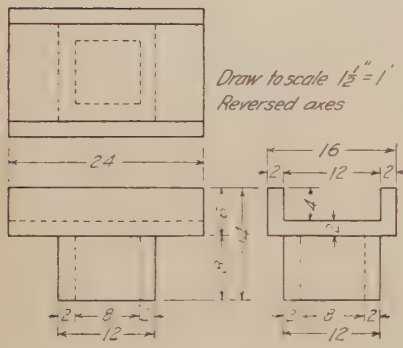

Fig. 315.—Post cap.

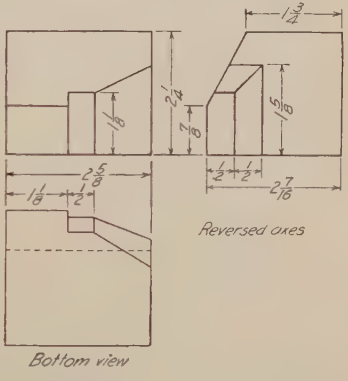

Fig. 316.—Springing stone.

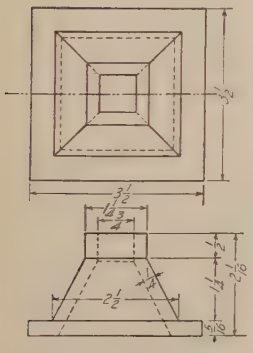

Fig. 317.—Column base.

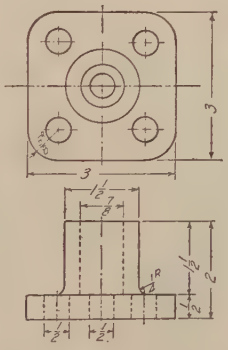

Fig. 318.—Base plate.

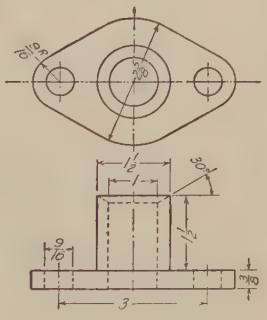

Fig. 319.—Gland.

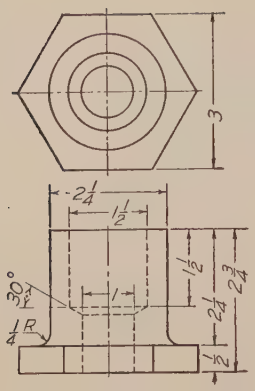

FIG. 320.—Blank for gland.

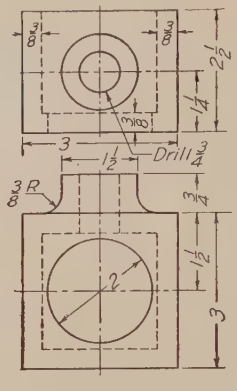

FIG. 321.—Sliding cover.

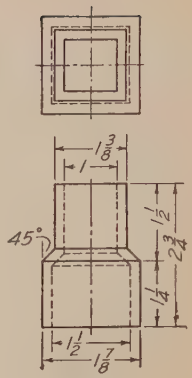

FIG. 322.—Socket wrench.

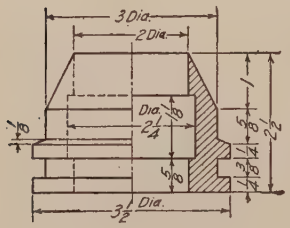

FIG. 323.—Sliding cone.

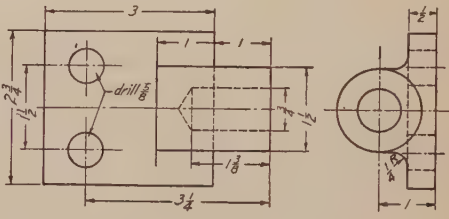

FIG. 324.—Rod support.

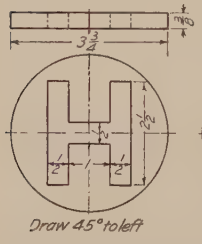

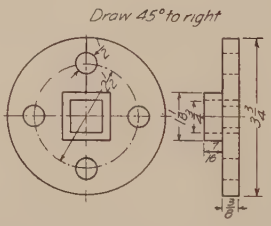

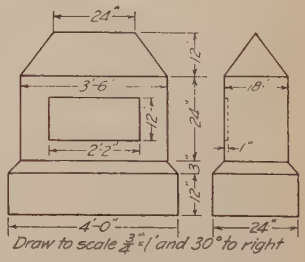

FIG. 325.—Letter die. FIG. 326.—Guide plate. FIG. 327.—Monument.

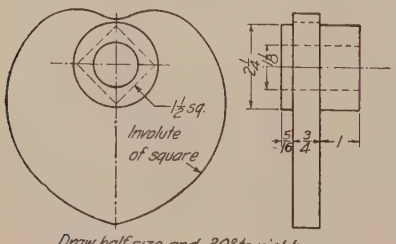

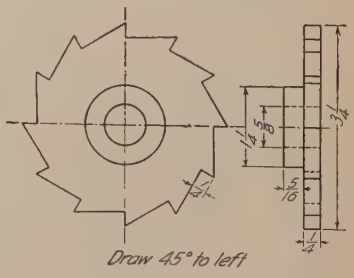

FIG. 328.—Heart cam. FIG. 329.—Ratchet wheel.

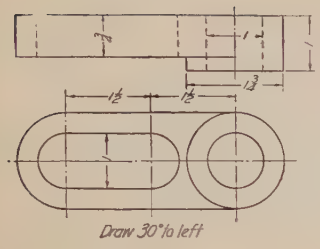

FIG. 330.—Slotted link.

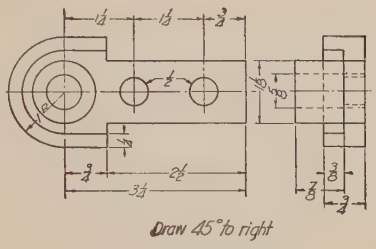

FIG. 331.—Swivel plate.

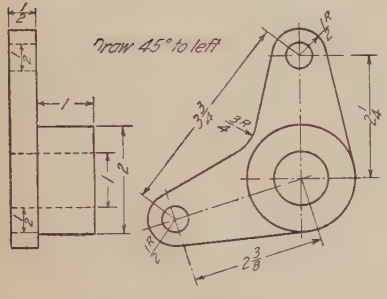

FIG. 332.—Bell crank.

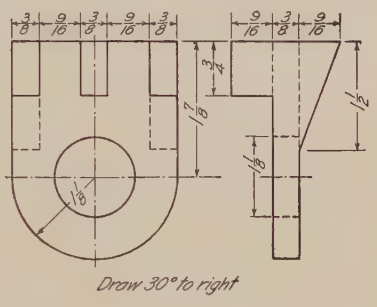

FIG. 333.—Stop plate.

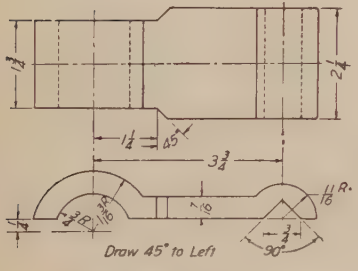

FIG. 334.—Clamp.

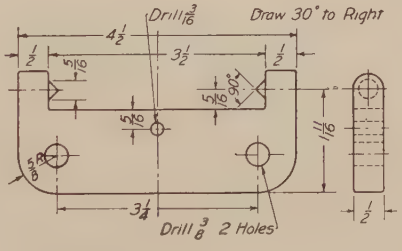

FIG. 335.—Drafting machine anchor.

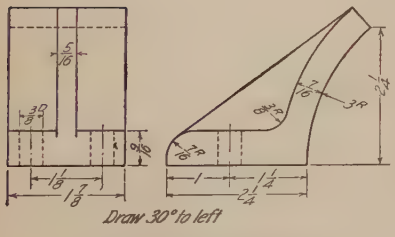

FIG. 336.—Guard bracket.

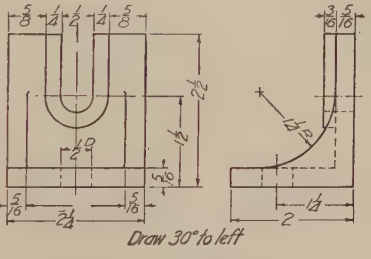

FIG. 337.—Angle yoke.

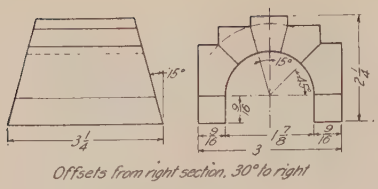

FIG. 338.—Culvert model.

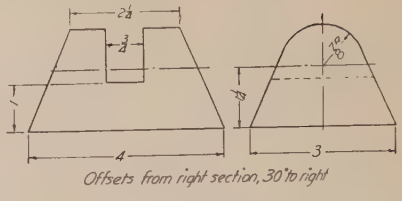

FIG. 339.—Slotted guide.

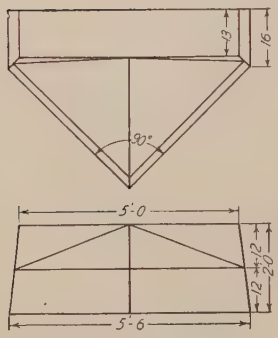

FIG. 340.—Buttress capstone.

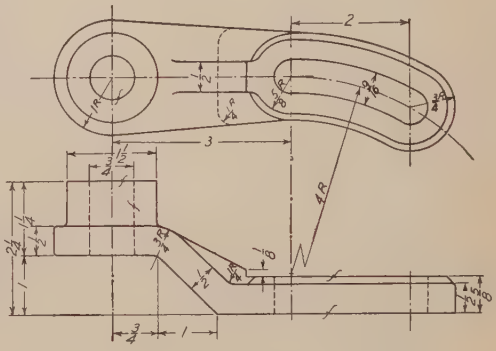

FIG. 341.—Swing bracket.

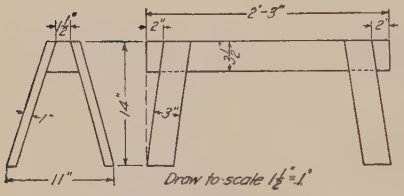

FIG. 342.—Saw horse.

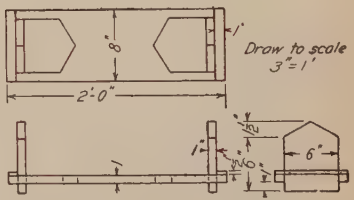

FIG. 343.—Book end.

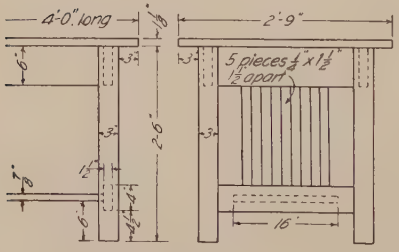

FIG. 344.—Table.

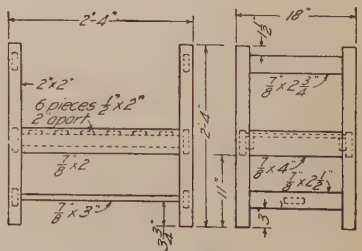

FIG. 345.—Chair.

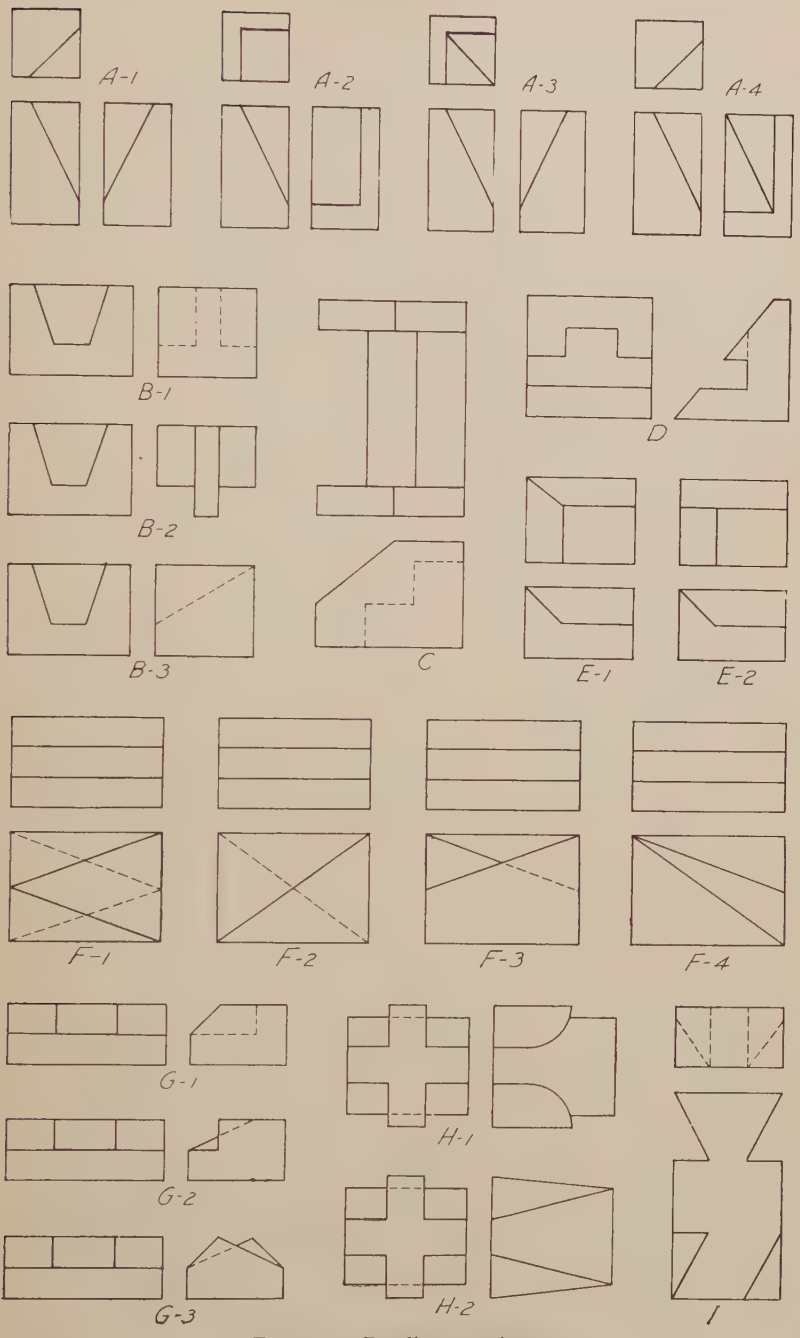

Fig. 346.—Reading exercises.

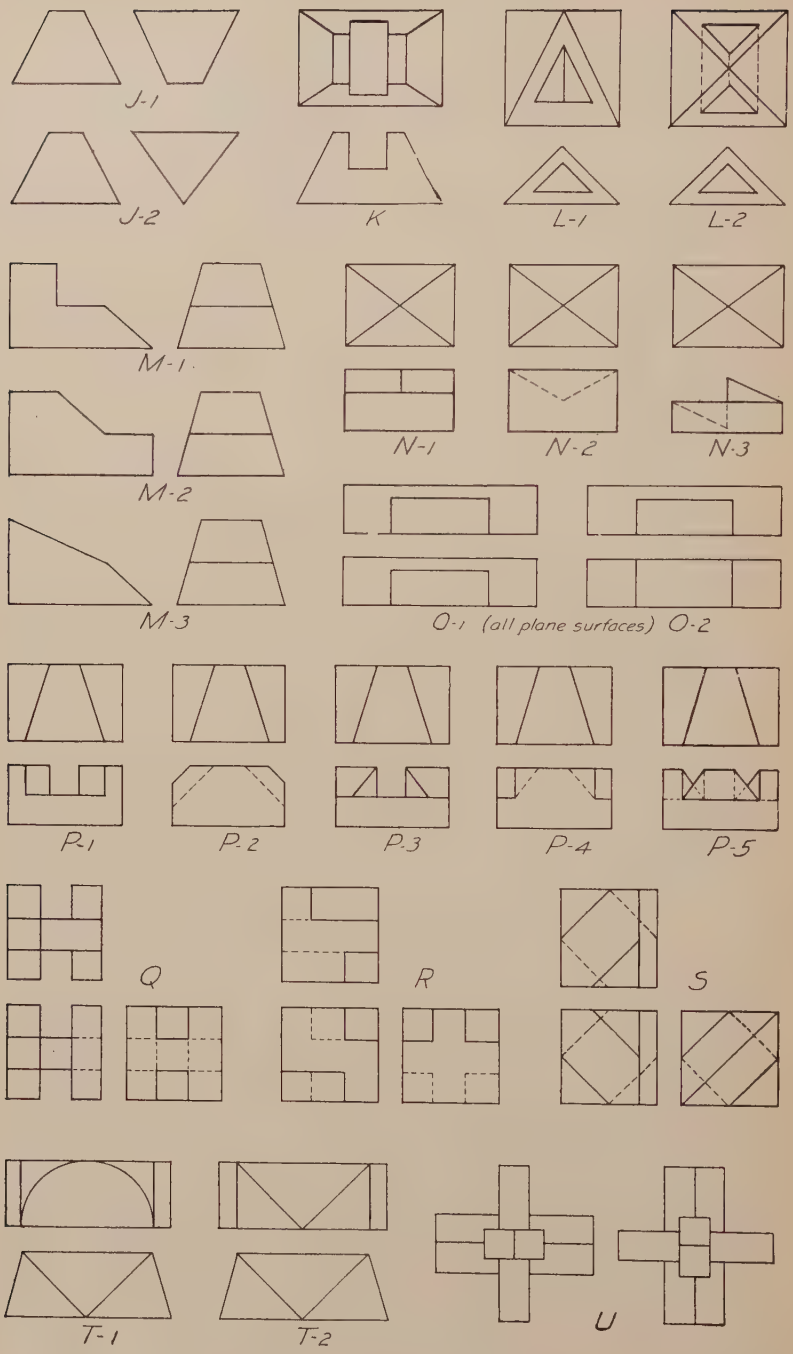

Fig. 347.—Reading exercises.

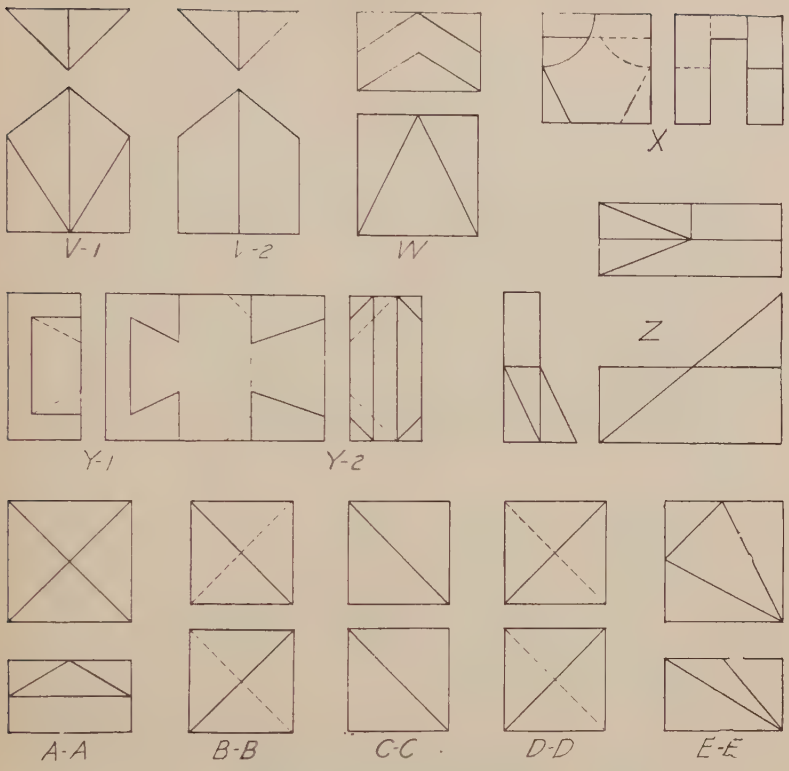

Fig. 348.—Reading exercises.

CHAPTER IX

Developed Surfaces and Intersections[1]

125. Surfaces.—A surface may be considered as generated by the motion of a line. Surfaces may thus be divided into two general classes, (1) those which can be generated by a moving straight line, (2) those which can be generated only by a moving curved line. The first are called *ruled surfaces*, the second, *double curved surfaces*. Any position of the moving line is called an *element*.

Ruled surfaces may be divided into (*a*) *planes*, (*b*) *single curved surfaces*, (*c*) *warped surfaces*.

A *plane* may be generated by a straight line moving so as to touch two other intersecting or parallel straight lines.

Single curved surfaces have their elements either parallel or intersecting. These are the cylinder and the cone; and a third surface, which we shall not consider, known as the convolute, in which the consecutive elements intersect two and two.

Warped surfaces have no two consecutive elements either parallel or intersecting. There is a great variety of warped surfaces. The surface of a screw thread and of the pilot of a locomotive are two examples.

Double curved surfaces are generated by a curved line moving according to some law. The commonest forms are *surfaces of revolution* made by the revolution of a curve about an axis in the same plane, as the sphere, torus or ring, ellipsoid, paraboloid, hyperboloid, etc.

126. Development.—In some kinds of construction full-sized patterns of different faces, or of the entire surface of an object are required; as for example in stone cutting, a templet or pattern giving the shape of an irregular face, or in sheet-metal work, a pattern to which a sheet may be cut that when rolled, folded, or formed will make the object.

[1] The full theoretical discussion of surfaces, their classification, properties, intersections, and development may be found in any good descriptive geometry.

The operation of laying out the complete surface on one plane is called the *development* of the surface.

Surfaces about which a thin sheet of flexible material (as paper or tin) could be wrapped smoothly are said to be developable; these would include figures made up of planes and single curved surfaces only. Warped and double curved surfaces are non-developable, and when patterns are required for their construction they can be made only by some method of approximation, which assisted by the pliability of the material will give the

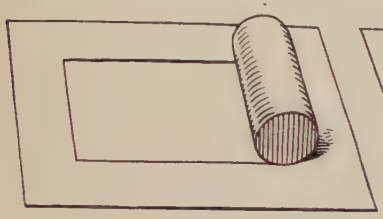

FIG. 349.—The cylinder developed.

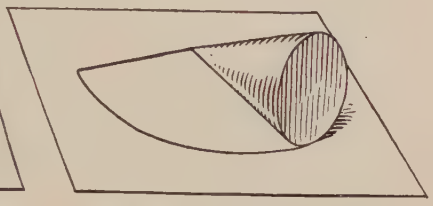

FIG. 350.—The cone developed.

required form. Thus, while a ball cannot be wrapped smoothly, a two-piece pattern developed approximately and cut from leather may be stretched and sewed on in a smooth cover, or a flat disc of metal may be die-stamped, formed, or spun to a hemispherical or other required shape.

We have learned the method of finding the true size of a plane surface by projecting it on an auxiliary plane. If the true size of all the faces of an object made of planes be found and joined in order, at their common edges, the result will be the developed surface. This may be done usually to the best advantage by finding the true lengths of the edges.

The development of a right cylinder would evidently be a rectangle whose width would be the altitude, and length the rectified circumference, Fig. 349; and the development of a right cone with circular base would be a sector with a radius equal to the slant height, and arc equal in length to the circumference of the base, Fig. 350.

As illustrated in Figs. 349 and 350, developments are drawn with the inside face up. Sheet-metal workers make their punch marks for folding on the inside surface.

In the laying out of real sheet-metal problems an allowance must be made for seams and lap, and in heavy sheets for the thickness and for the crowding of the metal; there is also the con-

sideration of the commercial sizes of material, and of economy in cutting, in all of which some practical shop knowledge is necessary. This chapter will be confined to the principles alone.

In the development of any object its projections must first be made, drawing only such views or parts of views as are necessary to give the lengths of elements and true size of cut surfaces.

127. To Develop the Hexagonal Prism.—Fig 351. Since the base is perpendicular to the axis it will roll out into the straight

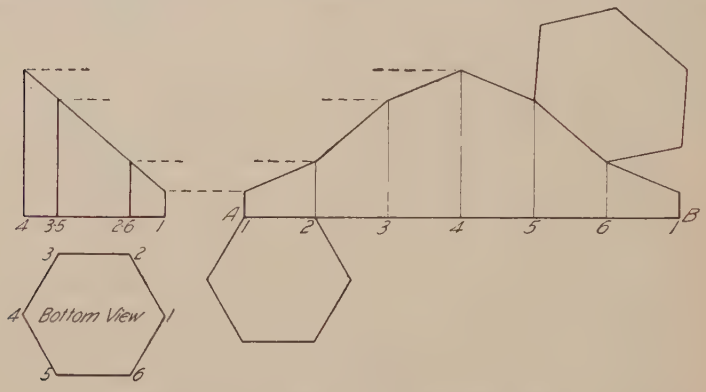

Fig. 351.—Development of hexagonal prism.

line AB. This line is called by sheet-metal workers the "stretchout." Lay off on AB the length of the perimeter of the base, and at points 1, 2, 3, etc., erect perpendiculars, called "measuring lines," representing the edges. Measure on each of these its length as given on the front view, and connect the points. For the development of the entire surface in one piece attach the true size of the upper face and the bottom in their proper relation on common lines. It is customary to make the seam on the shortest edge.

128. To Develop the Right Cylinder.—Fig. 352. In rolling the cylinder out on a tangent plane, the base, being perpendicular to the axis, will develop into a straight line. Divide the base, here shown as a bottom view, into a number of equal parts, representing elements. Project these elements up to the front view. Draw the stretchout and measuring lines as before. Transfer the lengths of the elements in order, either by projection or with dividers, and join the points by a smooth curve. Sketch the curve very lightly freehand before fitting the curved ruler to it. This might be one-half of a two-piece elbow. Three-

piece, four-piece, or five-piece elbows may be drawn similarly, as illustrated in Fig. 353. As the base is symmetrical, one-half only need be drawn. In these cases the intermediate pieces as *B*, *C* and *D* are developed on a stretchout line formed by laying

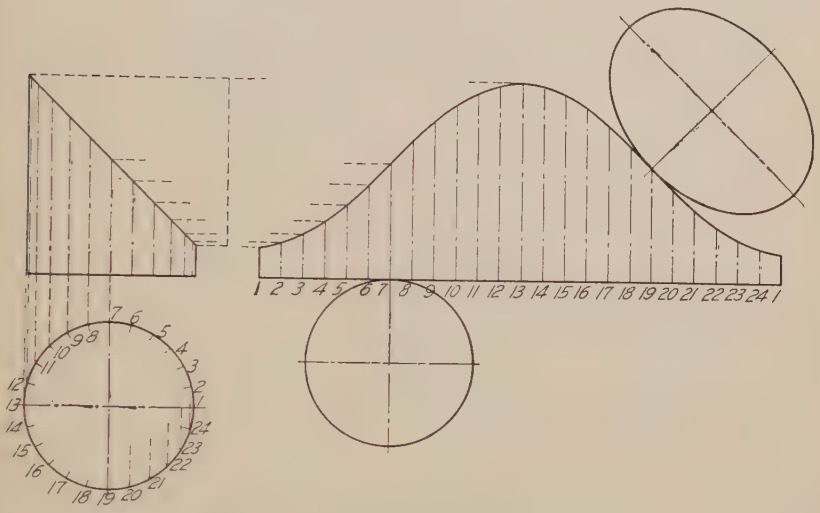

Fig. 352.—Development of right cylinder.

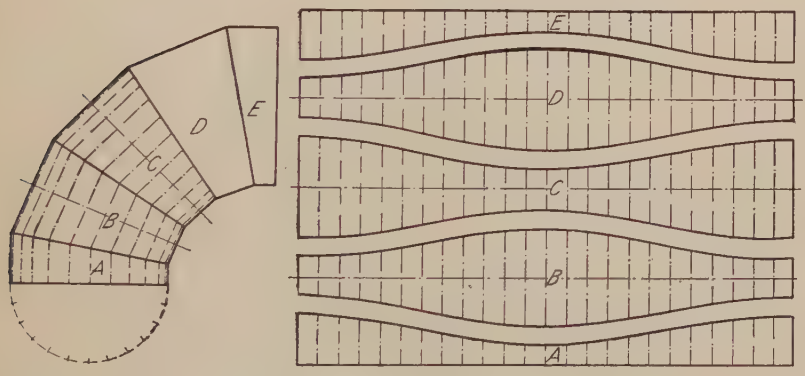

Fig. 353.—Development of five piece elbow.

off the perimeter of a section, called a "right section" obtained by a plane perpendicular to the elements. Taking this plane through the middle of the piece the stretchout line becomes the center line of the development.

Evidently any elbow could be cut from a single sheet without waste if the seams were made alternately on the long and short sides.

The octagonal dome, Fig. 354, illustrates an application of the development of cylinders. Each piece is a portion of a cylinder. The elements are parallel to the base of the dome and show in their true lengths in the top view. The true length of the stretch-

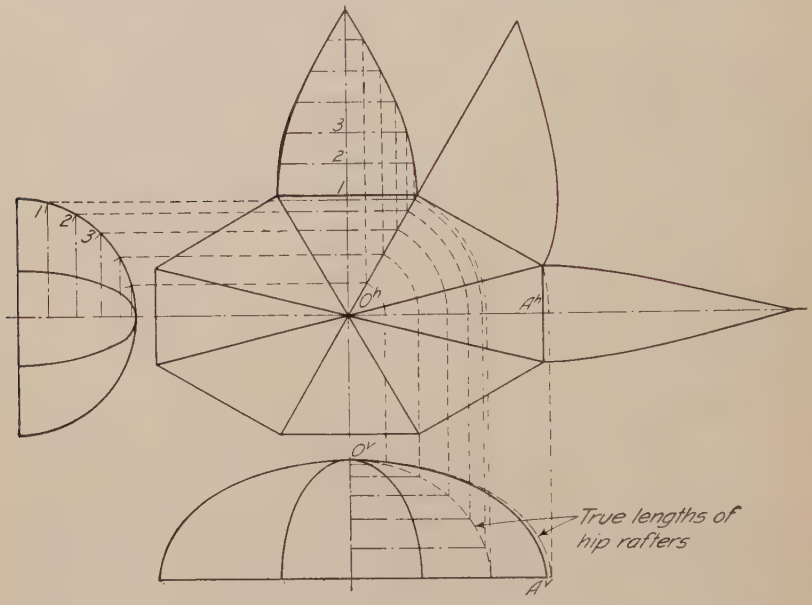

Fig. 354.—Development of octagonal dome.

out line shows in the front view at O^vA^v. By considering O^hA^h as the edge of a right section the problem is identical with the preceding problem.

The true shape of a hip rafter is found by revolving it until parallel to the vertical plane, in the same manner as finding the true length of any line, taking a sufficient number of points on it to get a smooth curve.

129. To Develop the Hexagonal Pyramid.—Fig. 355. Since this is a right pyramid the edges are all of equal length. The edges OA and OD are parallel to the vertical plane and consequently show in their true length on the front view. With a center O_1 taken at any convenient place, and a radius O^vA^v draw an arc. On it step off the perimeter of the base and con-

nect these points successively with each other and with the vertex O_1.

The line of intersection of the cutting plane is developed by laying off the true length of the intercept of each edge on the cor-

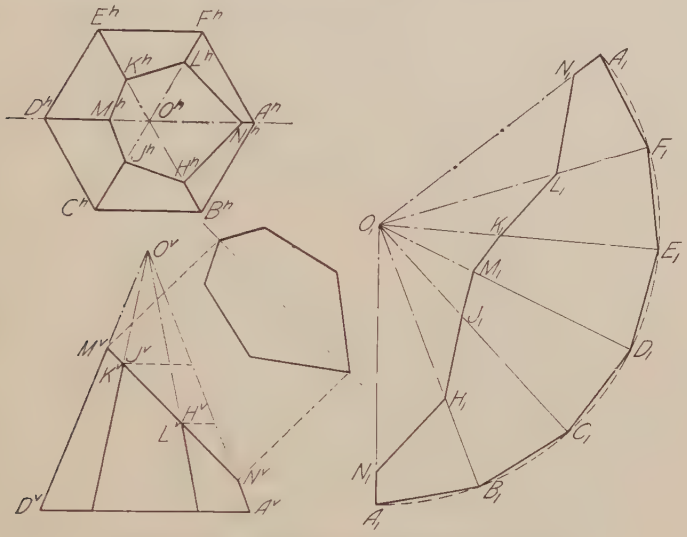

FIG. 355.—Development of hexagonal pyramid.

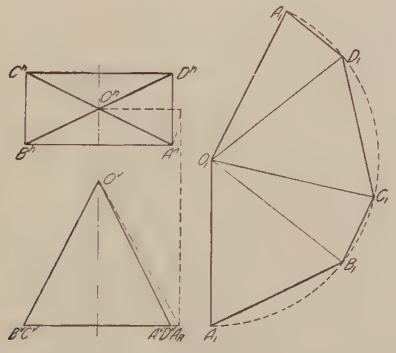

FIG. 356.—Development of rectangular pyramid.

responding line of the development. The true length of these intercepts is found by revolving them about the axis of the pyramid until they coincide with O^vA^v as explained on page 97. The path of any point, as K^v, will be projected on the front view as a horizontal line. For the development of the entire

surface of the truncated pyramid attach the base, also find the true size of the cut face and attach it on a common line.

The rectangular pyramid, Fig. 356, is developed in a similar way, but as the edge OA is not parallel to the plane of projection it must be revolved to O^vA_r to obtain its true length.

130. To Develop the Truncated Right Cone.—Fig. 357. Divide the top view of the base into a convenient number of

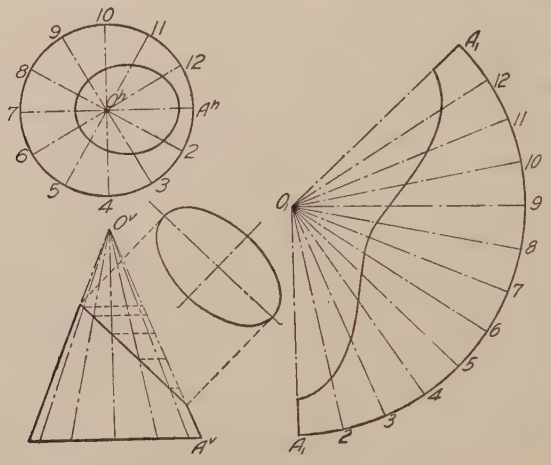

Fig. 357.—Development of right cone.

equal parts, project these points on the front view and draw the elements through them. With a radius equal to the slant height of the cone, found from the contour element O^vA^v, which shows the true length of all the elements, draw an arc, and lay off on it the divisions of the base, obtained from the top view. Connect these points with O_1 giving the developed positions of the elements. Find the true length of each element from vertex to cutting plane by revolving it to coincide with the contour element O^vA^v, and mark the distance on the developed position. Draw a smooth curve through these points.

131. Triangulation.—Non-developable surfaces are developed approximately by assuming them to be made up of narrow sections of developable surfaces. The commonest and best method for approximate development is by triangulation, *i.e.*, assuming the surface to be made up of a large number of triangular strips, or plane triangles with very short bases. This is used for all warped surfaces, and also for oblique cones, which although

single-curved surfaces and capable of true theoretical development can be done much more easily and accurately by triangulation.

The principle is extremely simple. It consists merely in dividing the surface into triangles, finding the true lengths of the sides of each, and, constructing them one at a time, joining these triangles on their common sides.

132. To Develop an Oblique Cone.—Fig. 358. An oblique cone differs from a right cone in that the elements are all of different lengths. The development of the right cone was prac-

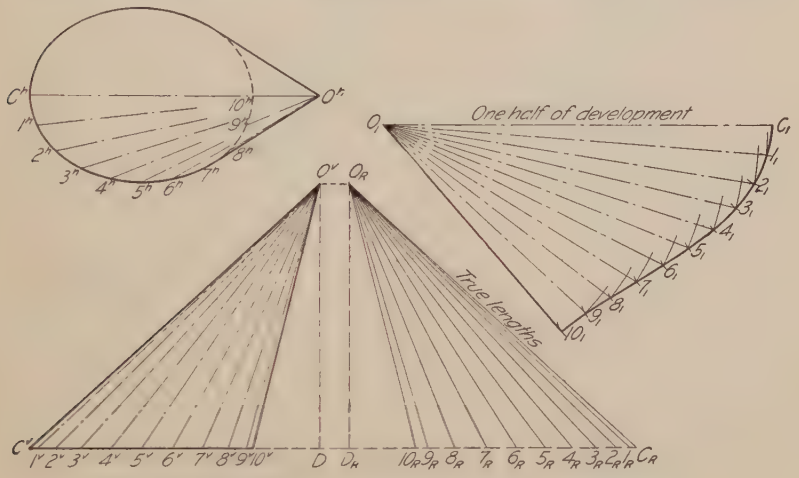

FIG. 358.—Development of oblique cone by triangulation.

tically made up of a number of equal triangles meeting at the vertex, whose sides were elements and bases the chords of short arcs of the base of the cone. In the oblique cone each triangle must be found separately.

Divide the base into a number of equal parts 1, 2, 3, etc. (as the plan is symmetrical about the axis O^hC^h one-half only need be constructed). If the seam is to be on the short side the line OC will be the center line of the development and may be drawn directly at O_1C_1 as its true length is given at O^vC^v. Find the true lengths of the elements O_1O_2 etc. by revolving them until parallel to V. This can be done by the usual method, but may be done without confusing the drawing by constructing an auxiliary figure as shown. The true length of any element is the hypotenuse of a right triangle whose altitude is the altitude of

the cone and whose base is the length of the H projection. Thus to find the true length of $O1$ lay off O^h1^h at D_R1_R and connect O_R1_R.

With O_1 as center and radius O_R1_R draw an arc on each side of O_1C_1. With C_1 as center and radius C^h1^h intersect these arcs at 1_1 then O_11_1 will be the developed position of the element

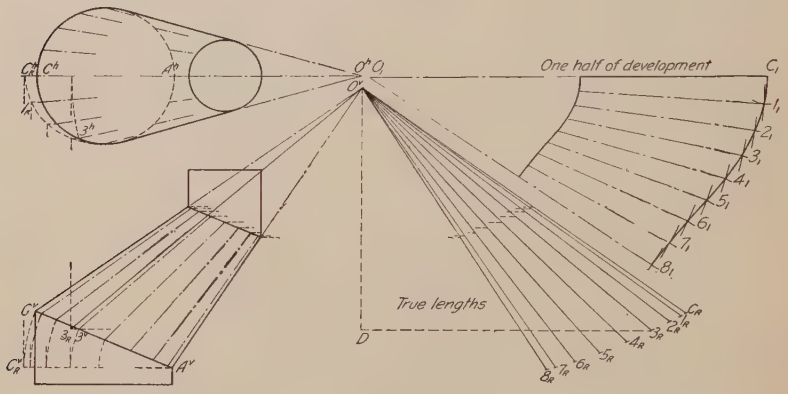

FIG. 359.—Development of oblique cone by triangulation.

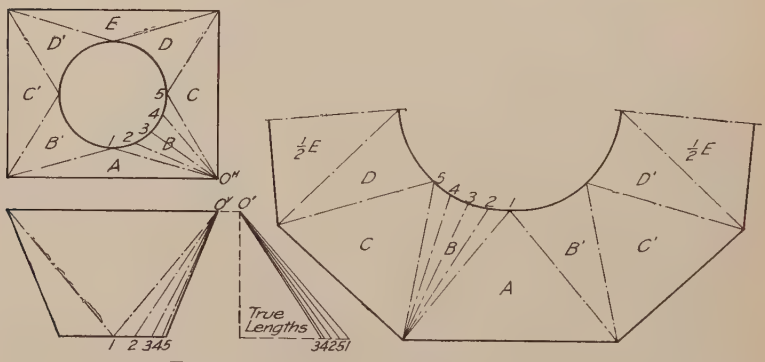

FIG. 360.—Development of transition piece.

$O1$. With 1_1 as center and arc 1^h2^h intersect O_12_1 and continue the operation.

Fig. 359 is an oblique cone connecting two parallel pipes of different diameters. This is developed in a manner similar to Fig. 358. The contour elements are extended to find the apex of the cone and the true lengths of the elements found as shown, measuring the lengths of the top views from the line O^vD^v on

horizontal lines projected across from the base on the front view. As the base of the cone is not shown in its true size in the top view the true lengths of the short sides of the triangles must be found by revolving the base parallel to H. With A^v as a center revolve each point on the front view of the base down to a horizontal line, C^v falling at $C_R{}^v$. Project these points up to meet horizontal lines drawn through corresponding points on the top view. From this the distances $C_R{}^h 1_R$, etc., may be found.

133. Transition Pieces.—Transition pieces are used to connect pipes or openings of different shapes of cross-section. Figure 360,

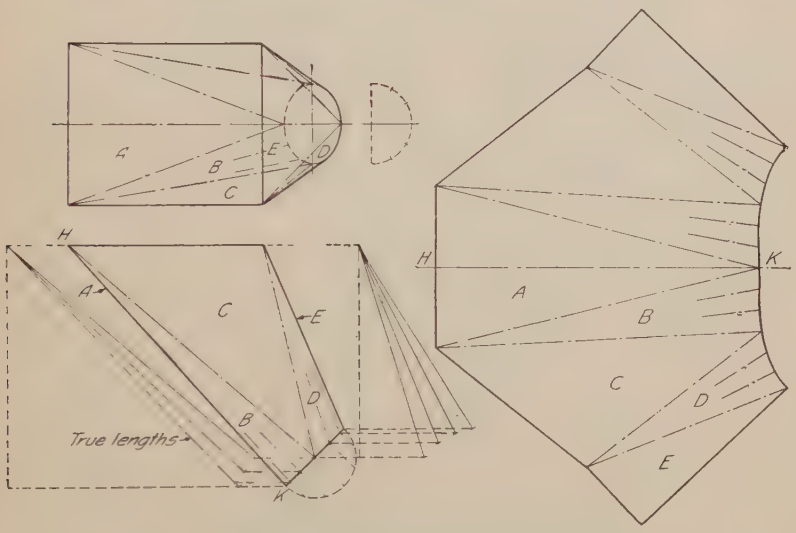

Fig. 361.—Development of transition piece.

for connecting a round pipe and a rectangular pipe on the same axis, is typical. These are always developed by triangulation. The piece shown in Fig. 360 is evidently made up of four isosceles triangles whose bases are the sides of the rectangle, and four parts of oblique cones. As the top view is symmetrical about a center line, one-half only need be divided. The construction is illustrated clearly in the figure.

Figure 361 is another transition piece, from rectangular to round not on the same axis. By using an auxiliary view of one-half the round opening the divisions for the bases of the oblique cones can be found. The true lengths of the elements are obtained as in Fig. 359.

134. To Develop a Sphere.—The sphere may be taken as typical of double curved surfaces, which can only be developed approximately. It may be cut into a number of equal meridian sections, as in Fig. 362, and these considered to be sections of cylinders. One of these sections developed as the cylinder in Fig. 354 will give a pattern for the others.

Another method is to cut the sphere in horizontal sections, each of which may be taken as the frustum of a cone whose apex is at the intersection of the extended chords, Fig. 363.

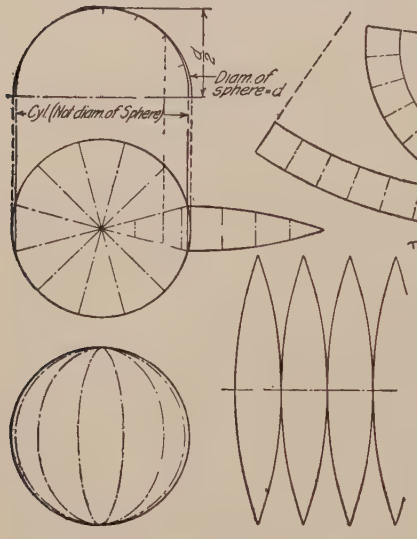

Fig. 362.—Sphere, gore method.

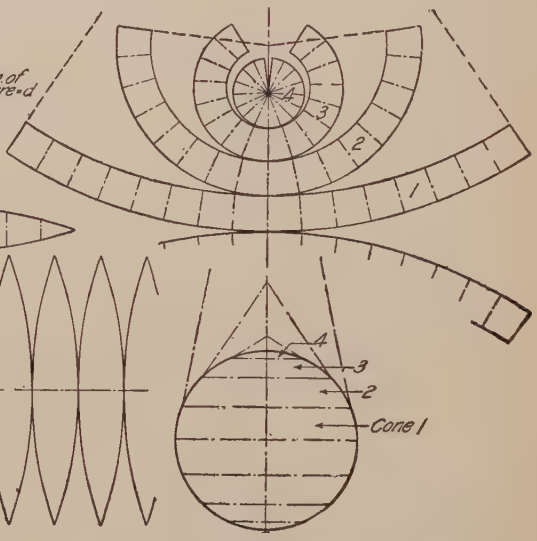

Fig. 363.—Sphere, zone method.

135. The Intersection of Surfaces.—When two surfaces intersect, the line of intersection, which is a line common to both, may be thought of as a line in which all the elements of one surface pierce the other. Practically every line on a drawing is a line of intersection, generally the intersection of two planes, or a cylinder cut by a plane, giving a circle. The term "intersection of surfaces" refers however to the more complicated lines occurring when geometrical surfaces such as cylinders, cones, prisms, etc., intersect each other.

Two reasons make it necessary for the draftsman to be familiar with the methods of finding the intersections of surfaces; first, intersections are constantly occurring on working drawings, and must be represented; second, in sheet-metal combinations the

intersections must be found before the piece can be developed. In the first case it is only necessary to find a few critical points, and "guess in" the curve; in the second case enough points must be determined to enable the development to be laid out accurately.

Any practical problem resolves itself into some combination of the geometrical type forms. In general, the method of finding the line of intersection of any two surfaces is to pass a series of planes through them in such a way as to cut from each the

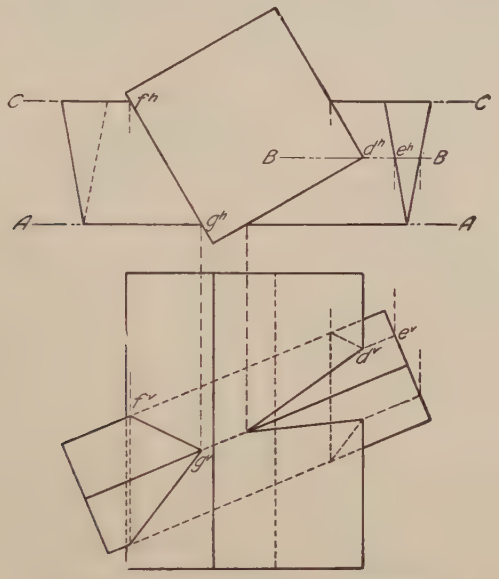

FIG. 364.—Intersection of two prisms.

simplest lines. The intersection of the lines cut from each surface by a plane will give one or more points on the line of intersection.

A study of the following typical examples will explain the method of working this class of problems.

136. To Find the Intersection of Two Prisms.—Fig. 364. Since the triangular prism would pass entirely through the square prism there are two closed "curves" of intersection. A plane *A-A* parallel to the vertical plane through the front edge of the triangular prism cuts two elements from the square prism. The front view shows where these elements cross the edge of the triangular prism thus locating one point on each curve. The plane *C-C* will contain the other two edges of the triangular prism

and will give two more points on each curve. As on the left side only one face of the square prism is penetrated, the curve would be a triangle, two sides of which are visible and one invisible. On the right side two faces are penetrated. The plane *B-B* is thus passed through the corner, the two elements cut from the triangular prism projected to the front view, where they intersect the corner as shown.

137. To Find the Intersection of Two Cylinders.—Fig. 365. In the position shown, three views or part views are necessary. The planes *A*, *B*, *C*, *D*, parallel to *V* and shown in the same relative position on top and end views, cut elements from each

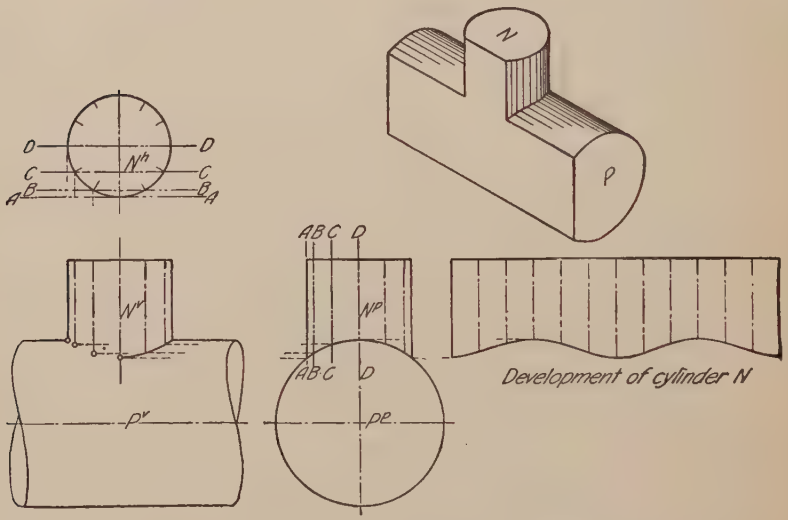

Fig. 365.—Intersection of two cylinders.

cylinder, the intersections of which are points on the curve. The pictorial sketch shows a section on one of the planes. The development of the upper cylinder is evident from the figure.

When the axes of the cylinders do not intersect, as in Fig. 366, the same method is used, but care must be taken in the choice of cutting planes. Certain "critical planes" give the limits and turning points of the curve. Such planes should always be taken through the contour elements. In the position shown the planes *A* and *D* give the width of the curve, the plane *B* the extreme length, and the plane *C* the tangent or turning points on the contour element of the vertical cylinder. After

determining the critical points a sufficient number of other cutting planes are used to give an accurate curve.

To develop the inclined cylinder, a right section at *S-S* is taken, whose stretchout would be a straight line. If the cutting planes are taken at random the elements would not be spaced uniformly. To simplify the development other planes may be assumed, by dividing the turned section into equal parts, as shown.

138. To Find the Intersection of a Prism and a Cone.—Fig. 367. In this case the choice of cutting planes would be made as parallel

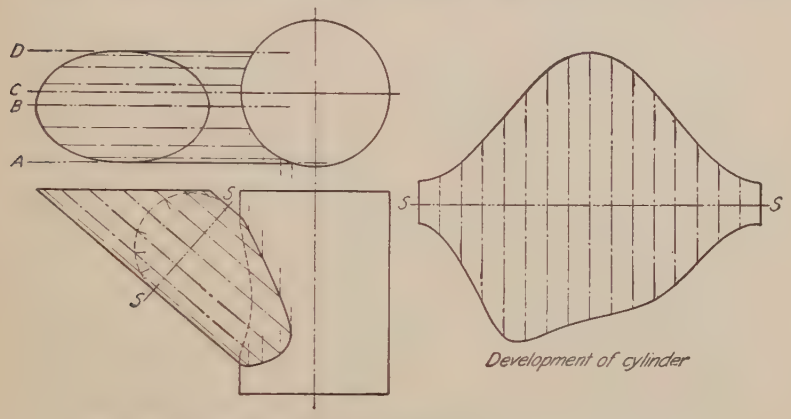

Fig. 366.—Intersection of two cylinders, axes not intersecting.

to *H*. Thus each plane would cut a circle from the cone and a hexagon from the prism, whose intersections would give points on the curve. The curve would be limited between the plane *A* cutting a circle whose diameter is equal to the short diameter of the hexagon and the plane *C* cutting a circle equal to the long diameter. As the prism is made up of six vertical planes the entire line of intersection of cone and prism would consist of the ends of six hyperbolas, three of which are visible, one showing its true shape, as cut by the plane *D*, the other two foreshortened. This illustrates the true curve on a chamfered hexagonal bolt head or nut. In practice it is always drawn approximately with three circle arcs.

139. To Find the Intersection of a Prism and a Sphere.—Fig. 368. In this case the curve consists of six circle arcs. Of the three visible arcs one shows its true shape, as cut by the plane *D*, the other two are the ends of ellipses. The

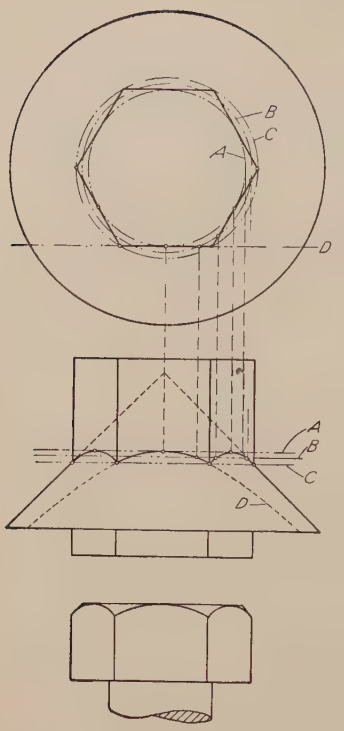

FIG. 367.—Intersection of prism and cone.

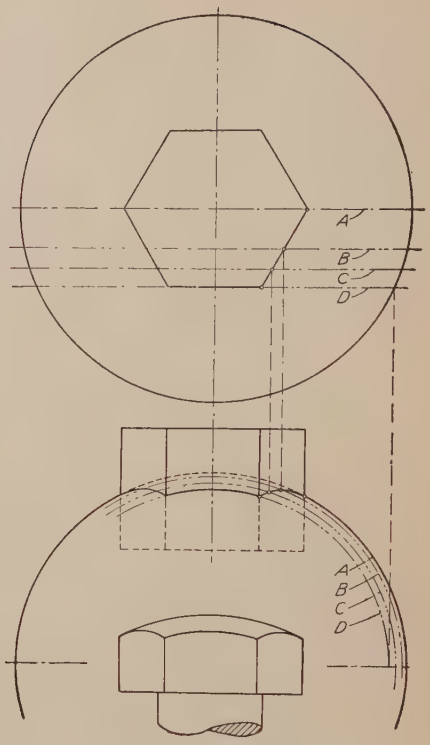

FIG. 368.—Intersection of prism and sphere.

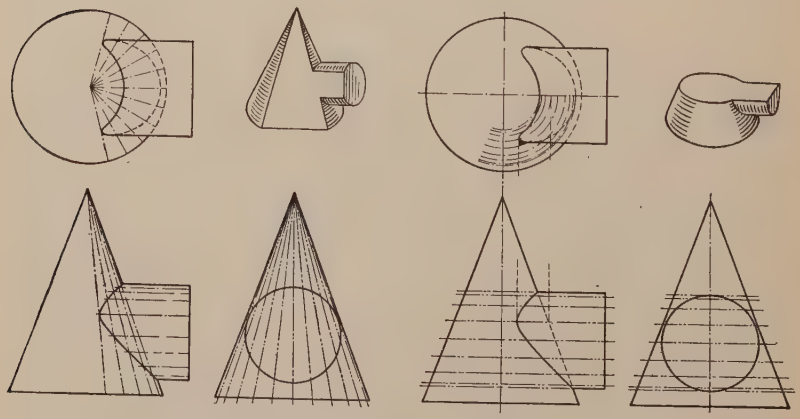

FIG. 369.—Intersection of cylinder and cone.

cutting planes may be chosen parallel to H as in the previous problem, or parallel to V as shown in the figure, in which each plane (A, B, C, D), cuts a circle from the sphere and vertical lines from the prism. This is the curve of a rounded hexagonal bolt head or nut, in which again three circle arcs are used in practical work.

140. To Find the Intersection of a Cylinder and a Cone.—Fig. 369. Here the cutting planes may be taken so as to pass through the vertex of the cone and parallel to the elements of

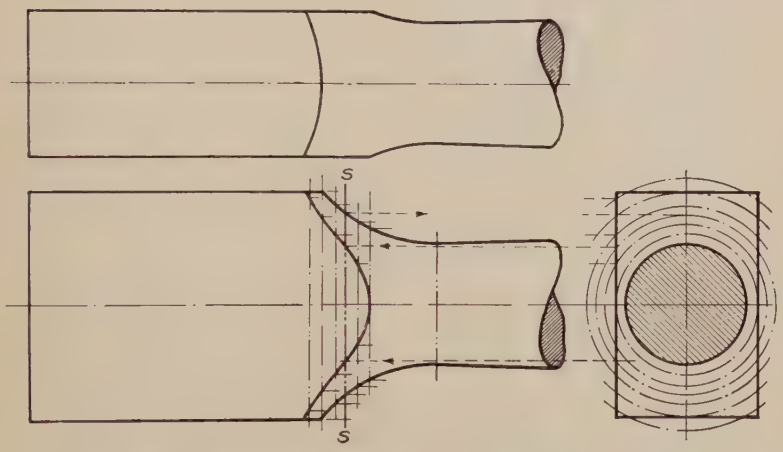

FIG. 370.—Intersection of a surface of revolution and a plane.

the cylinder, thus cutting elements from both cylinder and cone; or with a right cone they may be taken parallel to the base so as to cut circles from the cone. Both are illustrated in the figure. Some judgment is necessary in the selection both of the direction and number of the cutting planes. More points need be found at the places of sudden curvature or changes of direction of the projections of the line of intersection.

141. To Find the Intersection of a Plane and a Surface of Revolution.—Fig. 370. Planes perpendicular to the axis of any surface of revolution (right sections) will cut out circles. Thus the intersection of a surface of revolution and a plane is found by passing a series of planes perpendicular to the axis of revolution, cutting circles on the end view. The points at which these circles cut the "flat" are projected back as points on the curve.

PROBLEMS

142. Selections from the following problems may be constructed accurately in pencil without inking. Any practical problem can be resolved into some combination of the "type solids," and the exercises given illustrate the principles involved in the various combinations.

An added interest in developments may be found by working the problems on suitable paper, allowing for fastenings and lap,

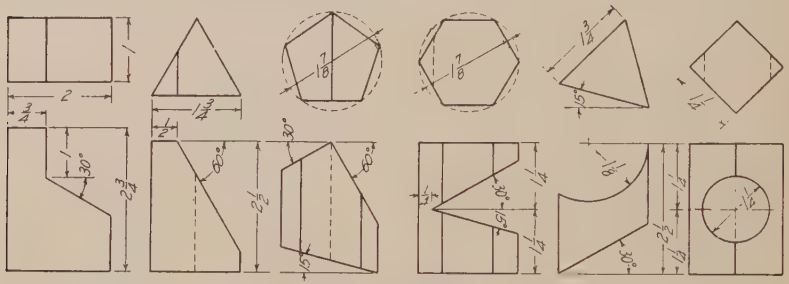

FIG. 371.—Prisms (Probs. 1 to 6).

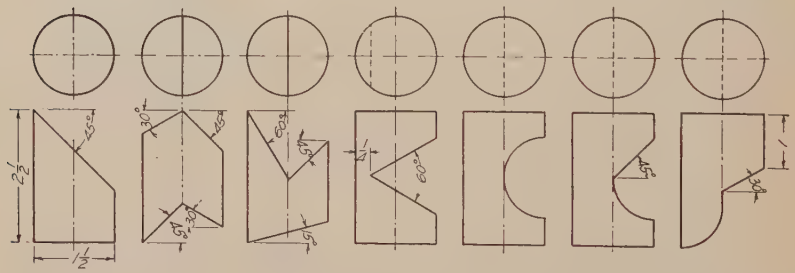

FIG. 372.—Cylinders (Probs. 7 to 13).

and cutting them out. It is recommended that at least one or two models be constructed in this way.

In the sheet-metal shops development problems unless very complicated are usually laid out directly on the iron.

The following figures and their developments may be drawn in a space $7'' \times 10''$.

Group I. Prisms. Fig. 371.
1, 2, 3. Develop entire surface of first three prisms.
4, 5, 6. Develop lateral surfaces of last three prisms.
Group II. Cylinders. Fig. 372.
7 to 13. Develop lateral surfaces of the cylinders.
Group III. Prisms and Cylinders. Fig. 373.

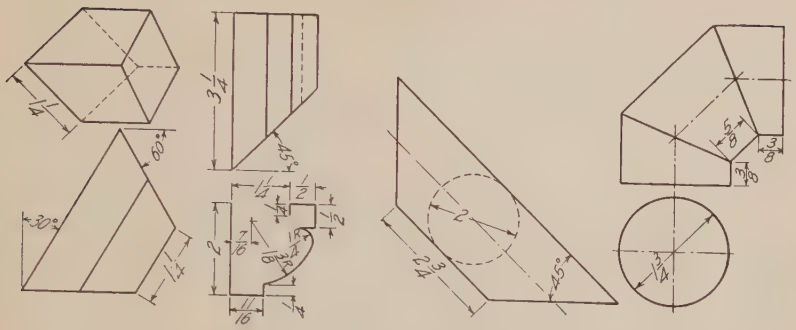

FIG. 373.—Prisms and cylinders (Probs. 14 to 17)

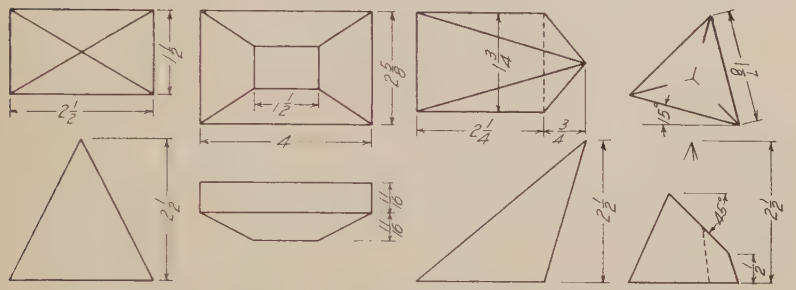

FIG. 374.—Pyramids (Probs. 18 to 21).

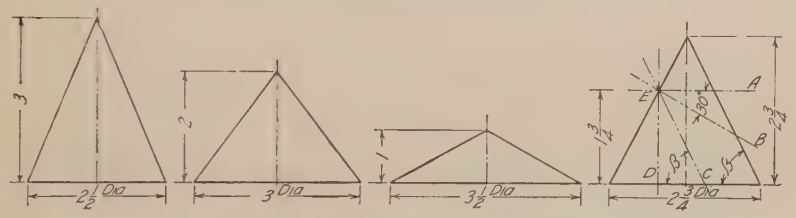

FIG. 375.—Cones (Probs. 22 to 25).

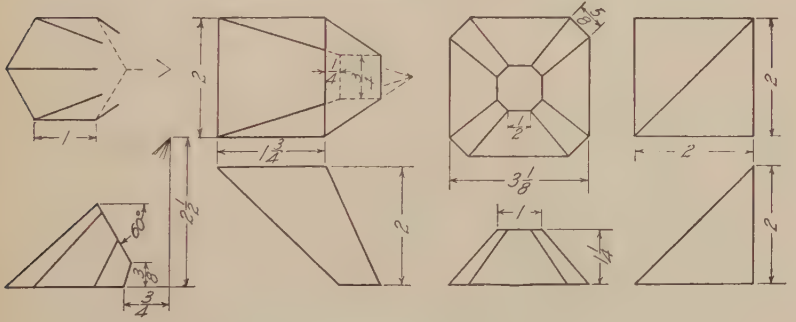

FIG. 376.—Pyramidal forms (Probs. 26 to 29).

14 to 17. Develop lateral surfaces of the figures. Note that 15 is a G. I. gutter.

Group IV. Pyramids. Fig. 374.

18, 19, 20. Develop lateral surfaces of the pyramids.

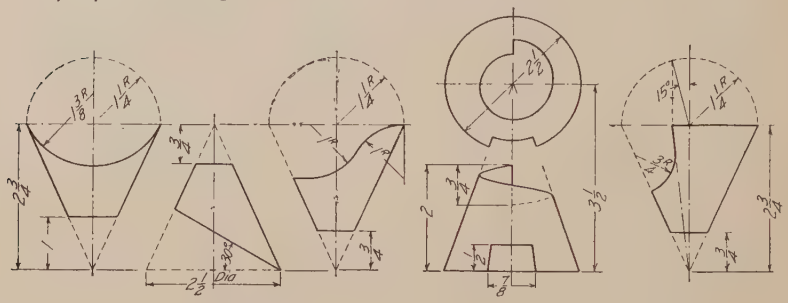

FIG. 377.—Cones (Probs. 30 to 34).

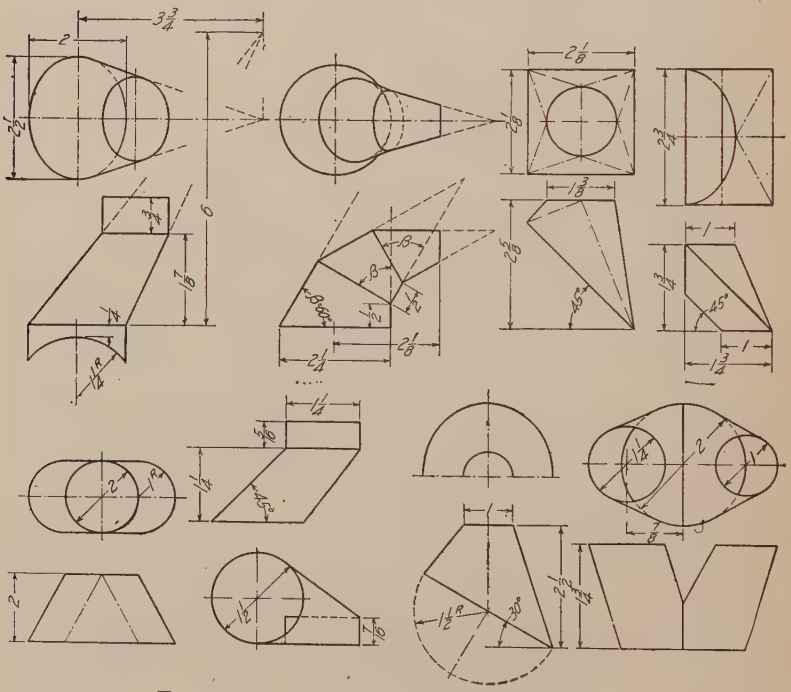

FIG. 378.—Transition pieces (Probs. 35 to 42).

21. Develop entire surface of triangular pyramid.

Group V. Cones. Fig. 375.

22, 23, 24. Develop surfaces of the cones, omitting bases.

25. Develop surface of cone cut by one of the planes *A*, *B*, *C* or *D*. Show true size of cut surface. (See Conic Sections, Fig. 129.)

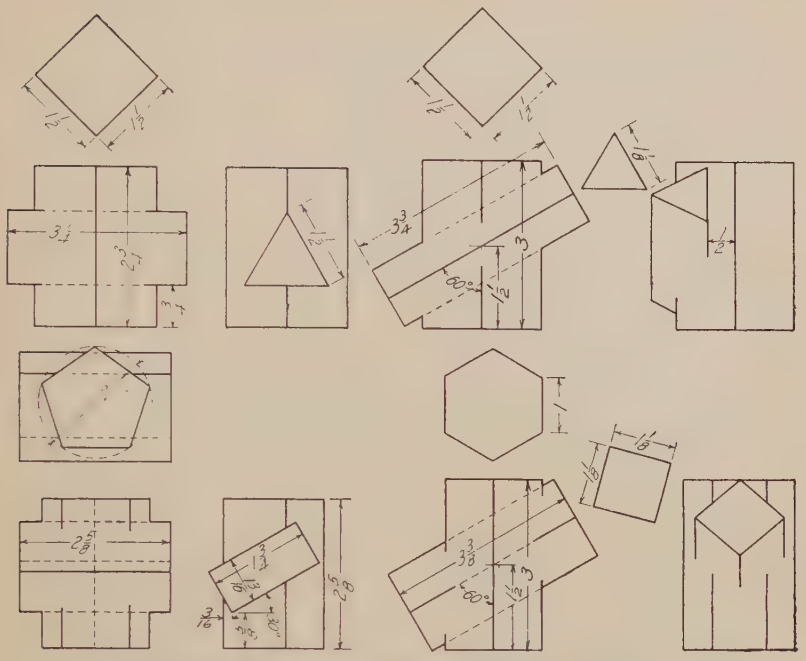

FIG. 379.—Intersection of prisms (Probs. 43 to 46).

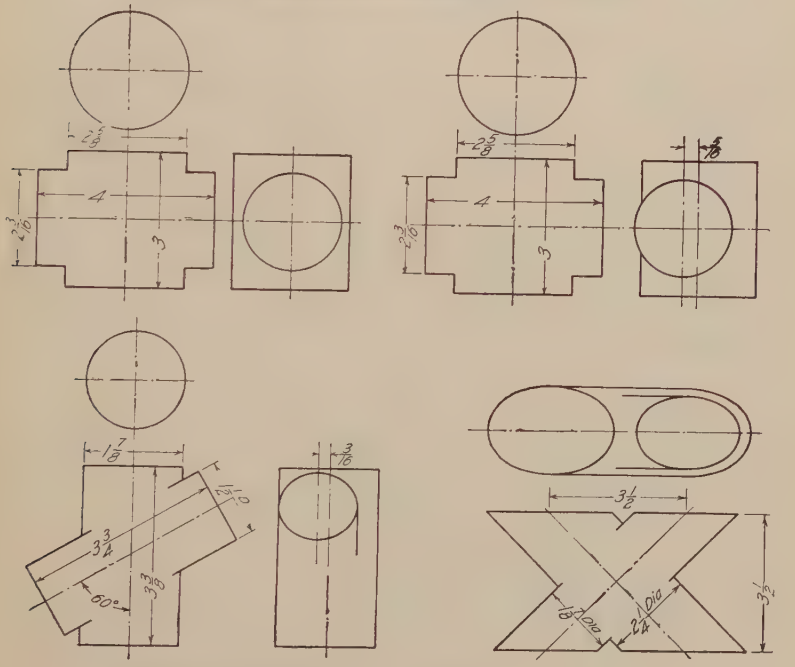

FIG. 380.—Intersections of cylinders (Probs. 47 to 50).

Group VI. Pyramids. Fig. 376.

26 to 29. Make paper models of the pyramids.

Group VII. Cones. Fig. 377.

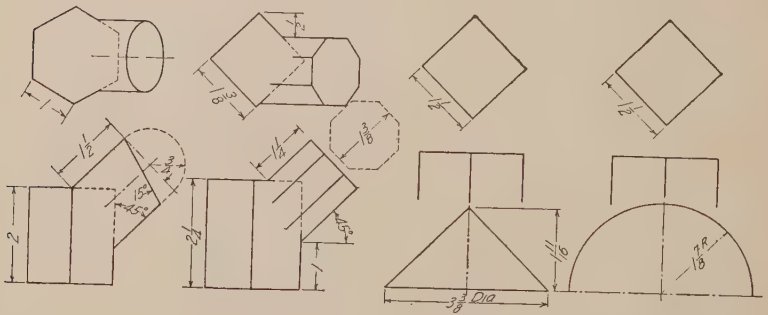

FIG. 381.—Intersections (Probs. 51 to 54).

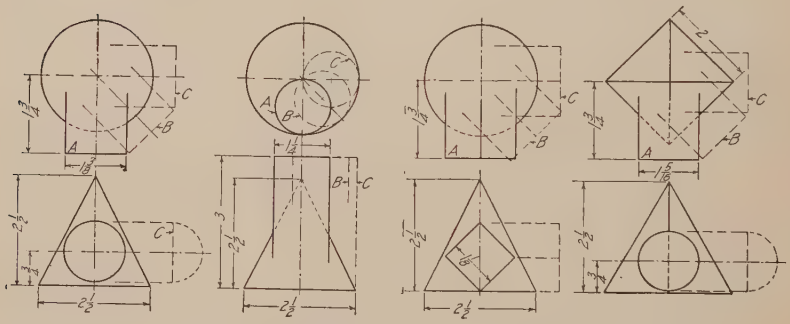

FIG. 382.—Intersections (Probs. 55 to 58).

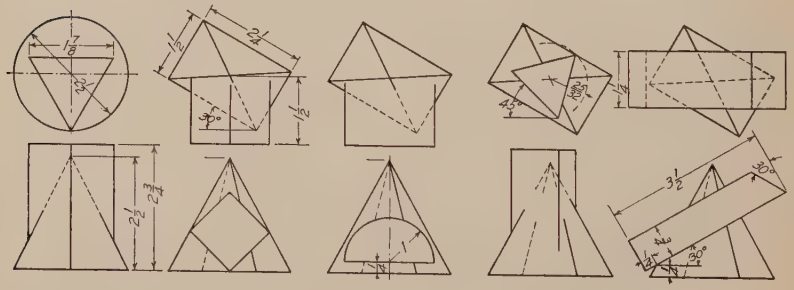

FIG. 383.—Intersections (Probs. 59 to 63).

30 to 34. Make paper models of the cones.

Group VIII. Transition Pieces. Fig. 378.

35 to 42. Develop surfaces. If models are to be made, draw to double size.

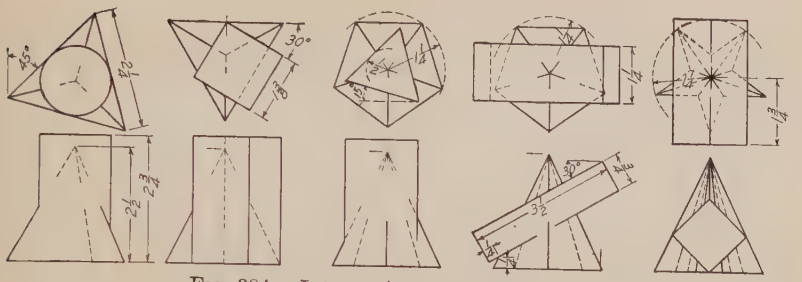

FIG. 384.—Intersections (Probs. 64 to 68).

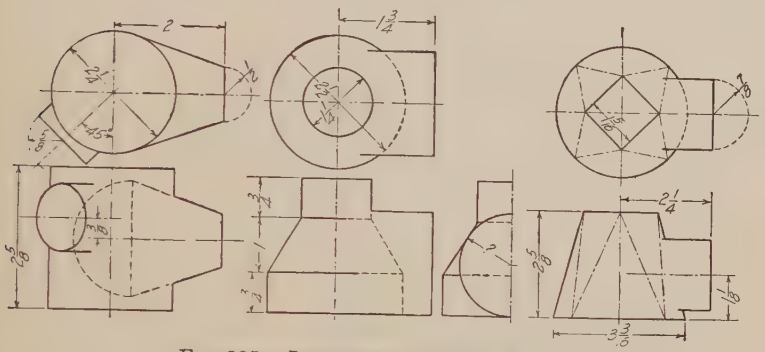

FIG. 385.—Intersections (Probs. 69 to 71).

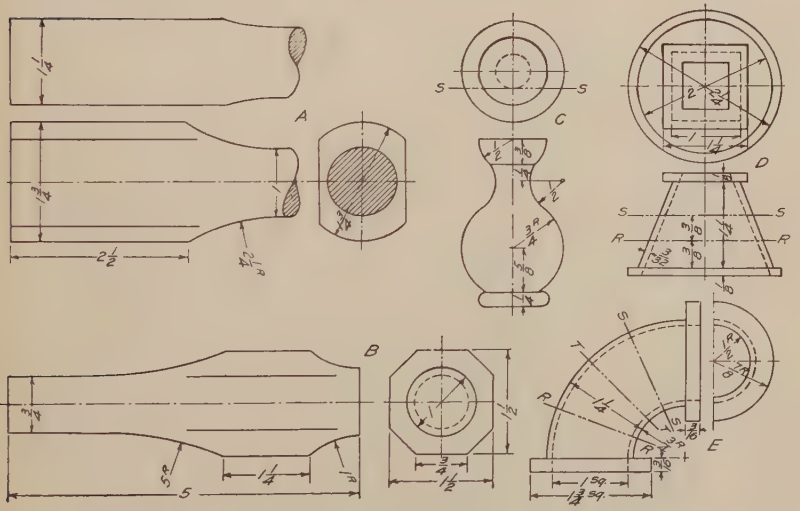

FIG. 386.—Surfaces cut by planes (Probs. 72 to 76).

Group IX. Intersections of Prisms. Fig. 379.

43 to 46. Find line of intersection of two prisms. Use particular care in indicating visible and invisible portions of line of intersection.

Group X. Intersections of Cylinders. Fig. 380.

47 to 50. Find line of intersection of two cylinders. Use particular care in indicating visible and invisible portions of curves.

Group XI. Intersections of Surfaces. Fig. 381.

51, 52. Find line of intersection.

53. Find line of intersection, cone and square prism, and complete to form one view of a chamfered square bolt head. (See Fig. 430.)

54. Sphere and square prism. Complete to form rounded bolt head.

Group XII. Intersections of Surfaces.

55 to 58. Fig. 382. Find line of intersection.

59 to 63. Fig. 383. Find line of intersection.

64 to 68. Fig. 384. Find line of intersection.

69 to 71. Fig. 385. Find line of intersection.

Group XIII. Surfaces Cut by Planes. Fig. 386.

72, 73, 75. Complete views showing lines of intersection.

74, 76. Make separate views of sections on planes indicated.

CHAPTER X

Dimensioning

143. After the correct representation of the object by its projections, that is, telling the *shape*, the entire value of the drawing as a working drawing lies in the dimensioning, that is, telling the *size*. Here our study of drawing as a language must be supplemented by a knowledge of shop methods. The machine draftsman to be successful must have an intimate knowledge of pattern making, forging, and machine-shop practice, as well as, in some cases, sheet-metal working and structural steel fabrication.

The beginning student without this knowledge should not depend alone upon his instructor but should set about to inform himself regarding the elements of the pattern-maker's and founder's work, and as to the uses of the ordinary machine tools; observing work going through the shops, reading a book on machine-shop practice and such periodicals as *The American Machinist* and *Machinery*.

The dimensions put on a drawing are not necessarily those used in making the drawing, but those necessary and most convenient for the workmen who are to make the piece. The draftsman must thus put himself in the place of the pattern-maker, blacksmith or machinist, and mentally construct the object represented, to see if it can be cast or forged or machined practically and economically, and what dimensions would give the required information in the best way. In brief, the drawing must be made with careful thought of its purpose.

144. Lines and Symbols.—Dimension lines are made with fine full lines, so as to contrast with the heavier outline of the drawing. They are terminated by carefully made *arrow heads* whose tips touch the extension lines and thus indicate exactly the points to which the dimension is taken. Arrow heads are drawn with a writing pen on each dimension line just before the figures are added. Most draftsmen draw them in one stroke, as shown on the enlarged heads in Fig. 387, but they may, if

preferred, be drawn in two strokes from left to right. The size of arrow heads varies somewhat with the size of the drawing but one eighth inch is a good general length. All arrow heads on the same drawing should be the same size, except in restricted spaces. Avoid the incorrect shapes shown. In machine

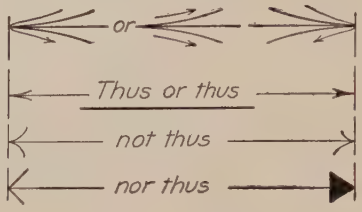

Fig. 387.—Arrow heads.

drawing practice a space is left in the dimension line for the figures, which should always read with the line. It is universal structural practice and is becoming common in architectural practice to place the figures above a continuous dimension line, as in Fig. 619. As architectural and structural drawings are made with finer lines than machine drawings, these dimension lines are sometimes drawn for contrast in dilute or colored ink.

Extension lines or witness lines are fine long-dash lines extending from the view to indicate the distance measured when the dimension is placed outside the view. They should not touch

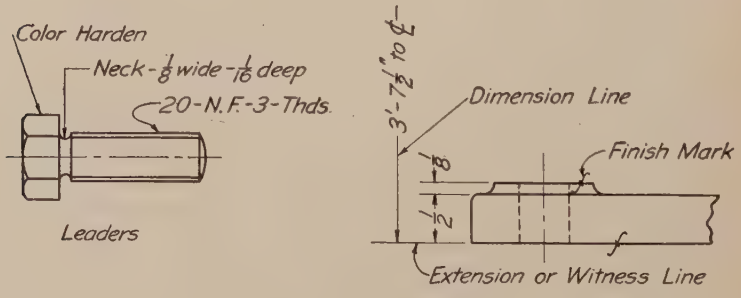

Fig. 388.—Notation.

the outline but should start about $\frac{1}{16}''$ from it and should extend about $\frac{1}{8}''$ beyond the dimension line, Fig. 388.

Leaders or *pointers* are fine lines terminated by an arrow head, to indicate the point or surface to which a note or dimension applies. They are sometimes made freehand, but a neater

appearance is gained by ruling them. When several are used they should be kept parallel if possible, as in Fig. 399.

Figures must be carefully drawn in either vertical or inclined style and of a size to be easily readable. In an effort for neatness the beginner often gets them too small. One-eighth inch is a good general height.

Fractions must be made with a horizontal division line in line with the dimension line, and with figures two-thirds the height of the whole numbers, so that the total height of the fraction is nearly twice that of the whole number.

Feet and inches are indicated thus, $5' - 6''$. When there are no inches it should be indicated as $5' - 0''$, $5' - 0\frac{1}{2}''$.

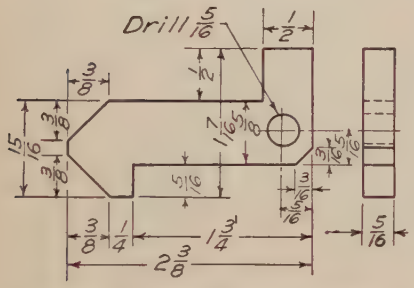

Fig. 389.—Contour rule applied (trip finger).

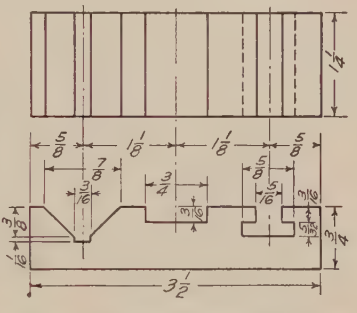

Fig. 390.—Contour rule applied (locating block).

When dimensions are all in inches the inch mark is often omitted from all the dimensions, as in Fig. 389.

Finish marks are used to indicate that certain surfaces of metal parts are to be machined, and that allowance must therefore be made on the casting or forging for finish. The standard symbol for finish is an italic "*f*" with its cross-mark intersecting the line, placed on all views which show the surface as a line (including invisible lines). If the piece is to be finished all over the note "fin. (or *f*) all over" is used and the marks on the drawing omitted. Finish marks are not necessary on drilled or reamed holes, when machined from the solid.

145. Theory of Dimensioning.—Any object, even if apparently complicated, can be analyzed as made up of a combination of simple geometrical shapes, principally prisms and cylinders, with occasionally parts of pyramids and cones, now and then a double curved surface, and, very rarely (except for the surface

of screw threads), some warped surfaces. If, *first*, each of these elemental shapes be dimensioned, and, *second*, the relative location of each be given, measured from center or base lines, or from each other, the dimensioning of any piece can be done systematically and simply.

Dimensions may thus be classified under the divisions *Size Dimensions* and *Location Dimensions.*

146. Size Dimensions.—As every solid has three dimensions, each of the geometrical shapes making up the object must have its length, breadth and thickness indicated in the dimensioning.

The commonest shape met with is the prism, usually in plinth, or flat, form. The universal rule to be followed is—*Give two of the three dimensions on the view showing the contour*

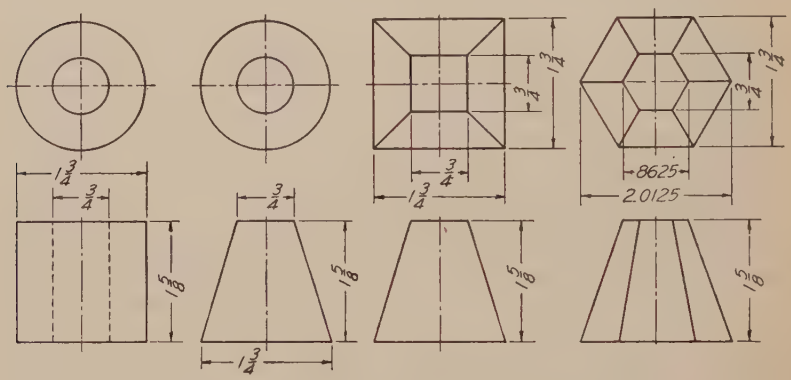

Fig. 391.—Dimensioning cylinders, cones, and pyramids.

shape and the third on one of the other views. Analyze Figs. 389 and 390.

The second shape is the cylinder, found on nearly every mechanical piece either as a shaft or a boss or a hole. A cylinder obviously requires only two dimensions, diameter and length. While it cannot be given as a standard rule it is good practice to give the diameter and length on the same view, Fig. 391. One common exception is in the case of "negative cylinders" or holes, in which the diameter and operation are better given together as a note on the contour view, as in Fig. 389. The contour rule also applies to all partial cylinders, such as rounded corners and fillets, whose radii must be given on the view that shows the shape.

Cones may be dimensioned with the altitude and diameter on the same view. They usually occur as frustums, or as tapers. (For taper dimensions see page 437.)

Pyramids should have two of their three dimensions given on the view that shows the shape of the base.

Spheres are dimensioned by giving the diameter on the most convenient view; other surfaces of revolution by dimensioning the generating curve.

Warped surfaces are dimensioned according to their method of generation, and as their representation requires numerous sections, each of these must be fully dimensioned.

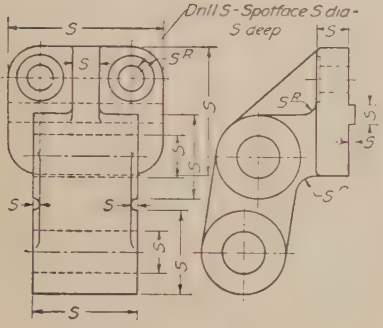
Drill S - Spotface S dia - S deep
S
S
S

to the bracket would, therefore, be given from the lower surface of the slot on which the bracket spline rests when the two pieces are assembled.

Flat surfaces are located from center lines or from base lines representing the edge of finished surfaces. Every circle representing a cylinder will have two center lines at right angles. Locate the axis of the cylinder by dimensioning from these center lines, as in Figs. 393 and 394. In general, location dimen-

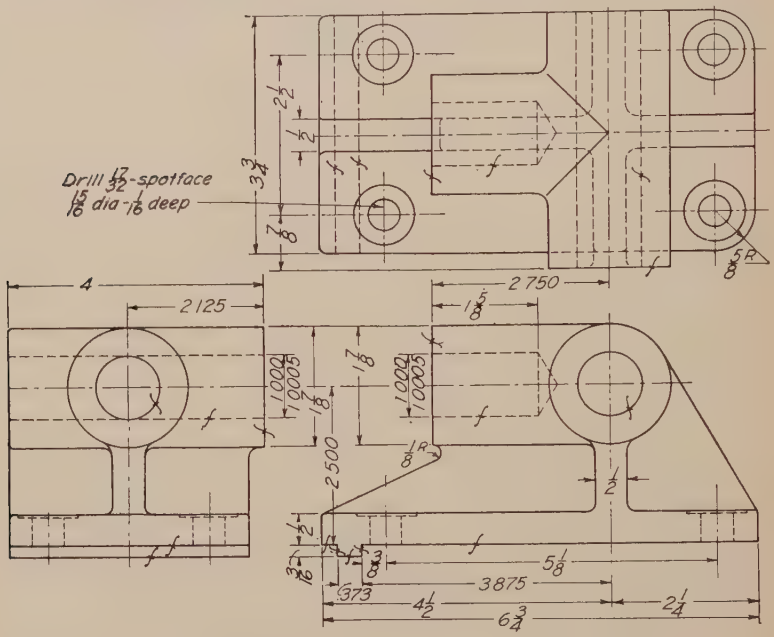

Fig. 394.—An example of dimensioning (angle shaft bracket).

sions are made either to a finished surface or to a center line. With rough castings or forgings a basic surface should be selected or a center line assumed.

148. Systematic adherence to these principles of dimensioning will give an assurance and confidence that the drawing is properly and completely dimensioned. Not only will all the necessary dimensions have been given, but any unnecessary ones will not even have been considered.

The ability to think in three dimensions, emphasized in previous chapters, is of just as much importance in size description as in shape description. Unless one can look at the drawing

and *see* the object it will be difficult to apply this theory of dimensioning intelligently.

149. Placing Dimensions.—Extension and dimension lines should all be drawn first, beginning with the view which shows

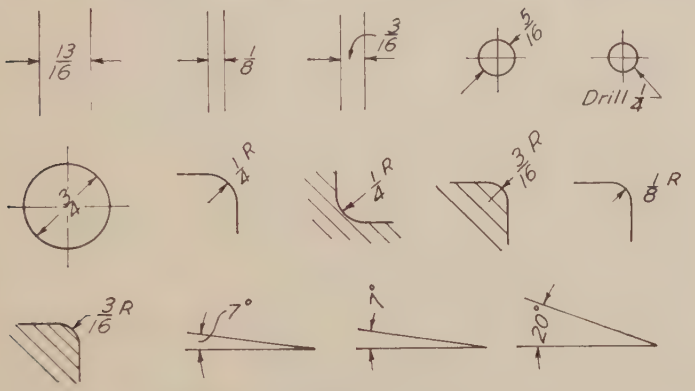

Fig. 395.—Dimensioning in limited space.

the characteristic shape of the piece, preferably placing the dimensions on the outside of the view and always bearing in mind the convenience and ease of reading the drawing. Be careful not to crowd dimension lines. Keep them one-quarter of

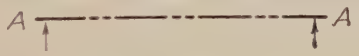

Fig. 396.—Cutting plane.

an inch or more away from the drawing and from each other. Never have them less than three-sixteenths. If space permits, as much as three-eighths is not excessive.

Sometimes it may be found necessary to move a size dimension in order to place a location dimension advantageously.

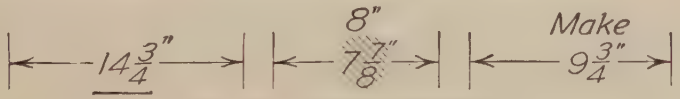

Fig. 397.—Revised dimensions.

The following general rules, grouped for convenience, should be observed.

RULES FOR DIMENSIONING

1. Horizontal and sloping dimensions should always read from left to right and vertical dimensions from bottom to top, *i.e.* the drawing should be readable from the bottom and right side.

2. Preferably keep dimensions outside the view, unless added clearness, simplicity and ease of reading will result from placing some of them inside. They should for appearance's sake be kept off the cut surfaces of sections. When necessary to be placed there, the section lining is omitted around the numbers.

3. Dimensions should generally be placed between views.

4. Do not repeat dimensions, unless there is a special reason for it.

5. Keep parallel dimension lines at equal distances apart and "stagger" the figures, Fig. 398.

6. In general, give location dimensions from or about center lines, or from finished surfaces. Remember that rough castings or forgings will vary in size, and do not locate drilled holes or other machine operations from the edges of unfinished surfaces.

7. Never give dimensions to the edge of a circular part but always from center to center.

8. If it is practical to locate a point by dimensioning from two center lines do not give an angular dimension.

9. Never use a center line as a dimension line.

10. Never use a line of the drawing as a dimension line.

11. Do not allow a dimension line to cross an extension line unless unavoidable.

12. The diameter of the "bolt circle" of holes in circular flanges is given, with the number and size of holes, Fig. 551.

13. Give the diameter of a circle, not the radius.

14. Give the radius of an arc, marking it *R* or *Rad.* (A radius dimension line has no arrow head at the arc's center.)

15. A number of dimensions in a row may be either continuous or staggered, continuous preferred.

16. Always give the three over-all dimensions (except with pieces having cylindrical ends) placing them outside any other dimensions.

17. Never require a workman to add or subtract dimensions.

18. Never require a workman to scale a drawing.

19. Dimensions must never be crowded. If the space is small methods as illustrated in Fig. 395 may be used.

20. The direction in which a section is taken should be indicated by arrows on the line representing the cutting plane. Figure 396 shows the standard method.

21. A dimension not agreeing with the scaled distance, should be heavily underscored, or indicated as in Fig. 397.

22. All notes should read horizontally.

23. Make decimal points of ample size.

150. Feet and Inches.—In machine-shop practice dimensions up to 24 inches are always given in inches. Over 24 inches practice varies in different companies, some use feet and inches, others inches up to 36, 48, 60 or 72. The sizes of wheels, gears, pulleys, cylinder bores, the stroke of pistons and length of wheel bases are always given in inches. Sheet-metal work, cabinet work, and furniture drawings are usually dimensioned in inches.

In architectural and structural work dimensions of 10 inches and over are always given in feet and inches, thus, 9″, 0′ − 10″, 1′ − 3″, 16′ − 0″.

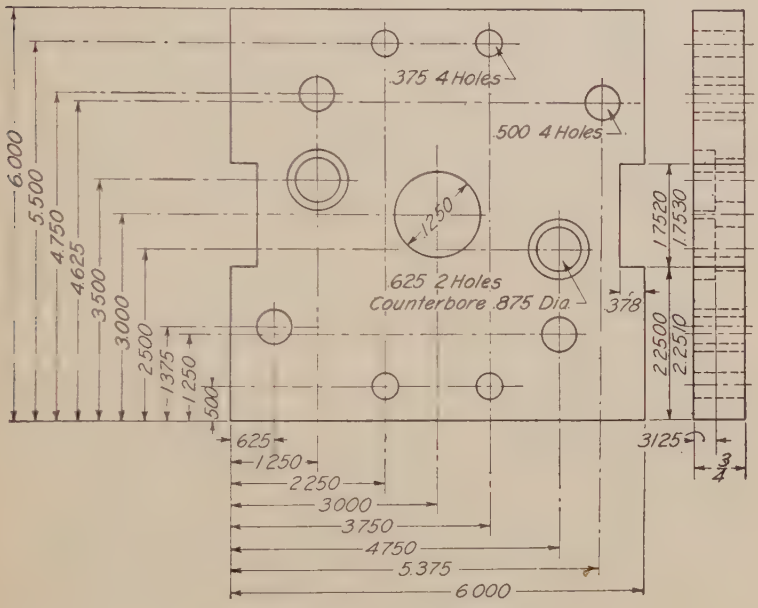

Fig. 398.—Base line dimensioning.

151. Base Line Dimensioning.—This method, principally used in die work and other precision work, takes two finished edges at right angles as base or reference lines and all dimensions are given from these lines. The jig plate, Fig. 398, is an example. The advantage of this method is that a series of errors each within its own allowable limit will not be cumulative.

152. Limits and Fits.—In dimensioning any working drawing the question of relative accuracy is confronted and the draftsman's knowledge of shop practice is concerned. In the ordinary dimensioning for surfaces to be machined, American practice works to inches and sixteenths, so the usual dimensions are in fractions $\frac{1}{2}$, $\frac{1}{4}$, $\frac{1}{8}$, $\frac{1}{16}$, $\frac{1}{32}$, $\frac{1}{64}$. With closely fitting parts the older practice is to mark both parts with the same dimension and add a note such as "drive fit," "running fit," "loose fit," "shrink fit," etc., leaving the amount of allowance to the machine

shop. In present practice it is customary to dimension close-fitting parts in decimals. In general it may be said that when fractions are used the limit of accuracy required is not less than 0.010″.

153. Tolerances.—With the demand for interchangeability and quantity production the exact size in decimals is specified for "essential dimensions," with the amount of "tolerance" over and under which will be allowed, since it is not possible to work to an absolutely accurate dimension. An example is given in Fig. 399. These limits are set by the engineering department and the shop follows orders explicitly. Much experience in

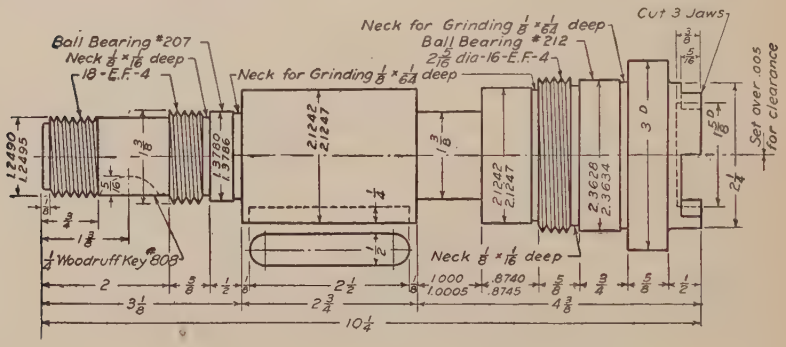

Fig. 399.—Tolerance dimensions (clutch shaft).

manufacturing is needed as well as a study of the particular mechanism involved, before the draftsman is able to know just the accuracy necessary and specify proper tolerances. When unnecessarily small tolerances are set the cost of manufacture is greatly increased.

The general tolerance is often stated in a note near the title as in Fig. 491. If a size need be only approximate the sign ± is placed after the numeral.

154. Dimensions for the Pattern Shop.—Some engineering offices prepare for all castings a set of "pattern drawings" for the exclusive use of the pattern shop, containing only the information needed by the pattern-maker. Figure 400 shows a pattern drawing of a cut gear blank. Where the weight of the rough casting is a factor, as in production work, the allowances for finish and draft are specified by the engineering department and included in the dimensions, in which case no finish marks are put on the drawing.

155. Dimensions for the Forge Shop.—Separate "forging drawings" are usually made when a piece is to be machined from a forging. These drawings are to scale (preferably full size) and show the completed forging in the stage ready for the machine

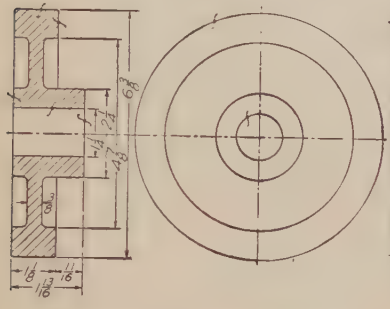

FIG. 400.—A pattern drawing.

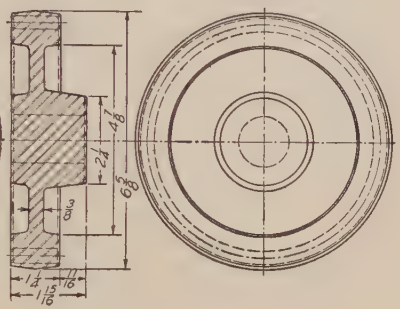

FIG. 401.—A forging drawing.

shop, with all the dimensions needed by the forge shop. No dimensions for finish are given, but the outlines of the finished piece are shown in light dash-lines within the contour, as in Fig. 401.

156. Dimensions for the Machine Shop.—When separate drawings are made for the pattern shop or forge shop the machine-shop drawing contains only the dimensions for machining the piece, as in Fig. 402. The separate drawing system prevents congestion of the dimensions and makes the drawings easier to work from thereby. On the other hand, the single system has the advantage of having all the information about the piece on one sheet. Paragraphs 151, 152 and 153 refer to machine shop dimensioning.

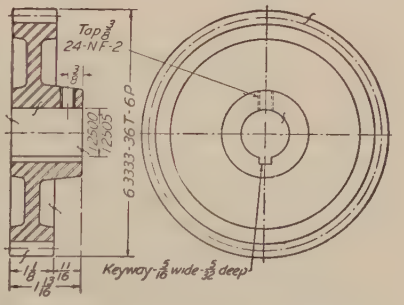

FIG. 402.—A machine shop drawing.

157. Dimensions for the Assembly Shop.—This information, placed on the assembly drawing, identifies and locates the various parts so that the machine can be built from it. Sometimes a separate sheet called an erection drawing is made.

158. Dimensions for the Purchaser.—Before the delivery of a machine the purchaser needs some dimensional information,

such as the method of mounting, size of foundation and location of bolts; the floor space and clear height required with all moving parts in maximum positions; the required locations of source of power, r.p.m. of driving pulleys, gears or motor; location of any piping or wiring, etc. These dimensions are given on a foundation plan or an outline assembly drawing prepared for the customer's use. Sometimes the drawing of a templet to be built by the purchaser for setting foundation bolts is sent.

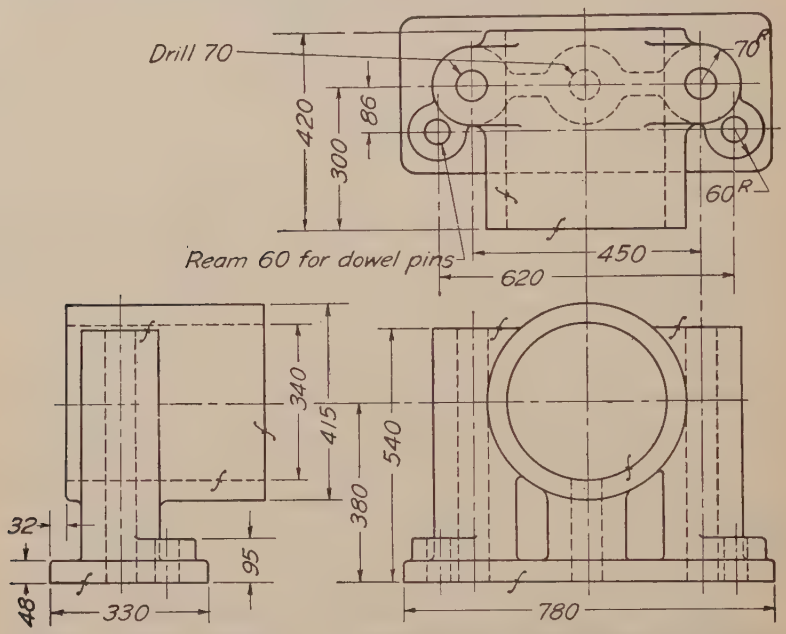

Fig. 403.—A metric drawing (front cam shaft bearing, Hispano-Suiza aero-engine).

159. The Metric System.—Knowledge of the metric system will be of advantage as it will be encountered on drawings from countries where this system is the standard, and in increasing instances in the United States. The first international standard of a mechanical device is that of ball bearings, which have been standardized in the metric system, except for sizes of balls.

Drawings in the metric system are not made to half-size or quarter-size. The first regular scale smaller than full size is one-fifth size, then one-tenth size. Sometimes the scale of 1 to $2\frac{1}{2}$ is used. The unit of measurement on drawings is the millimeter (mm.) and the figures are all understood to be milli-

meters, without any indicating mark. Figure 403 is an example of metric dimensioning. A table of metric equivalents is given on page 445.

160. Notes and Specifications.—Some necessary information cannot be drawn and hence must be added in the form of notes. This would include the number required of each piece, the kind of material, kind of finish, kind of fit, number and kind of bolts and screws, and any other specifications as to construction or use. Such special notes are lettered near the part referred to. All notes should read horizontally on the sheet. General notes

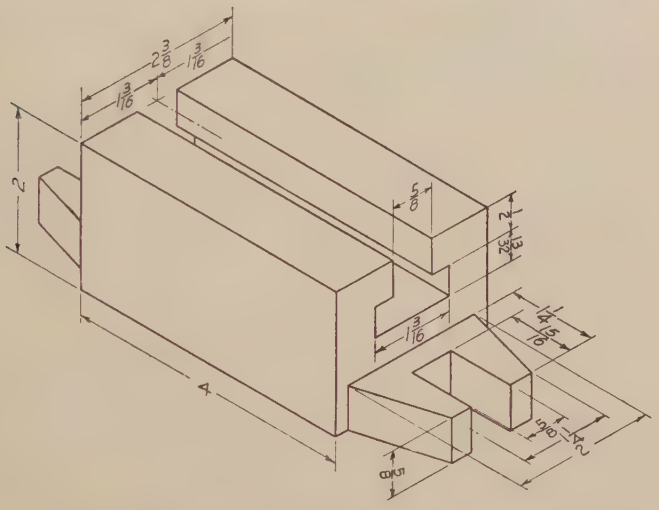

Fig. 404.—Dimensioning a pictorial drawing (anchor block).

referring to the entire machine, or all drawings on one sheet, are collected and lettered in one place.

Do not be afraid of putting notes on drawings. Supplement the graphic language by the English language whenever added information can be conveyed, but be careful to word it so clearly that the meaning cannot possibly be misunderstood.

If a note as to the shape of a piece will save making a view without sacrificing clearness, use it. In detailing right- and left-hand pieces, if different patterns are required both should be drawn; if one pattern can be used (as should be if possible) but machined right and left, both should be drawn; if identical but assembled right and left one only is drawn and number required noted. Standard bolts and screws, taper pins, washers,

keys and nuts are not detailed when specified by note or in the bill of materials. Standard tapers are indicated by number and name. See Appendix, page 437.

161. Dimensioning Pictorial Drawings.—When isometric or other pictorial forms are used as working drawings the size

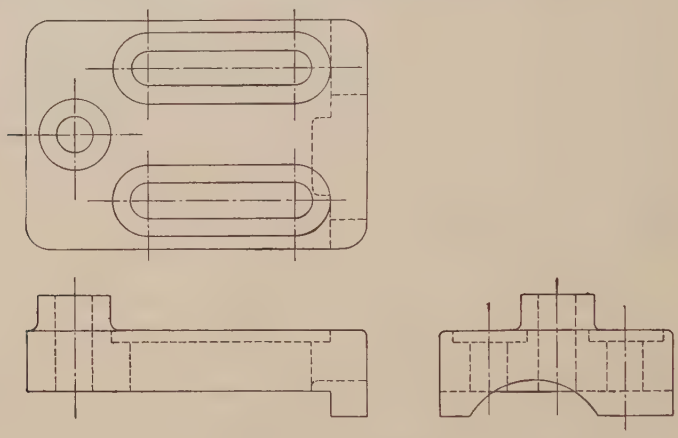

Fig. 405.—Pivot block.

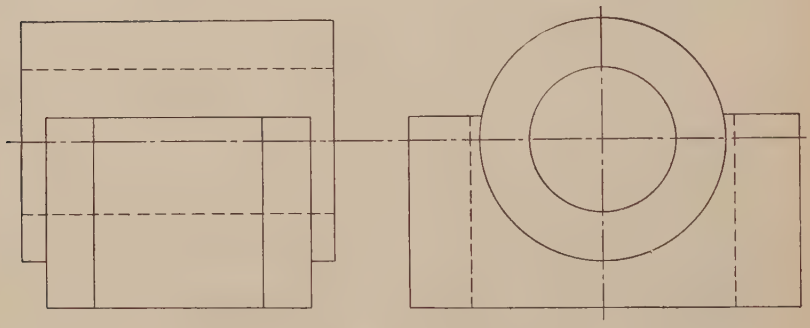

Fig. 406.—Solid bearing.

description is often more difficult than the shape description. With the principles in this chapter as a basis, the general rule to follow is to have all the extension lines and dimension lines parallel to the axes, and make the figures appear to lie in the plane of the face containing the part dimensioned. To do this the figures should be pictorial drawings of *vertical* figures. Leaders and dimensions in note form will be necessary oftener than on orthographic drawings. Figure 404 illustrates the system.

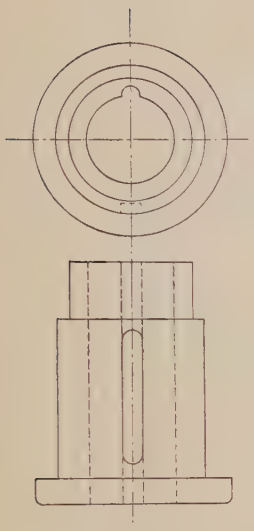

Fig. 407.—Gear bushing.

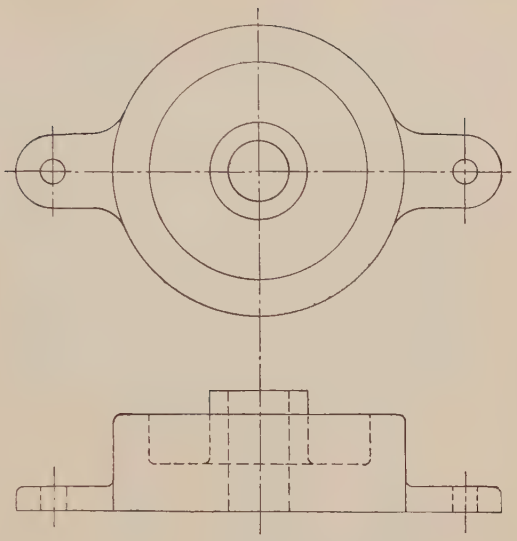

Fig. 408.—End plate.

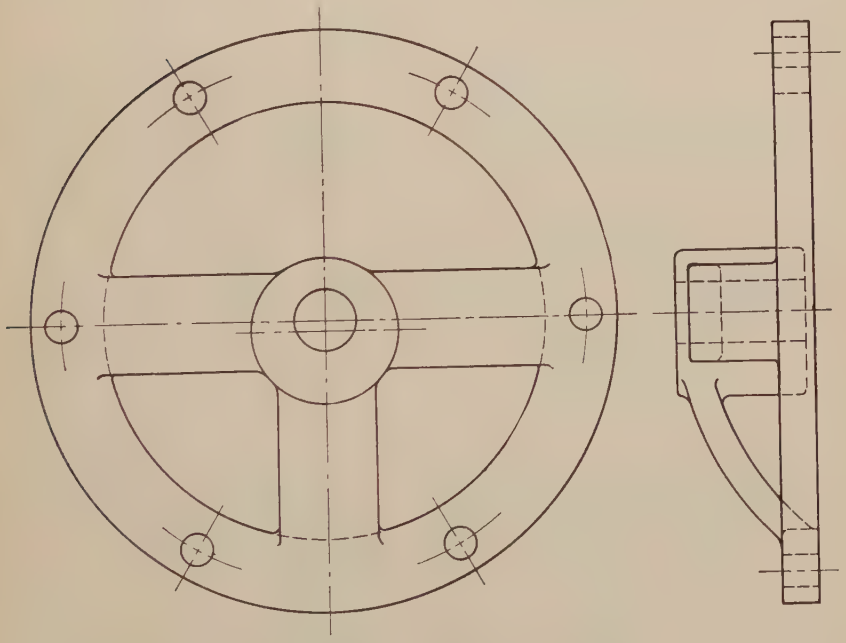

Fig. 409.—Motor end plate.

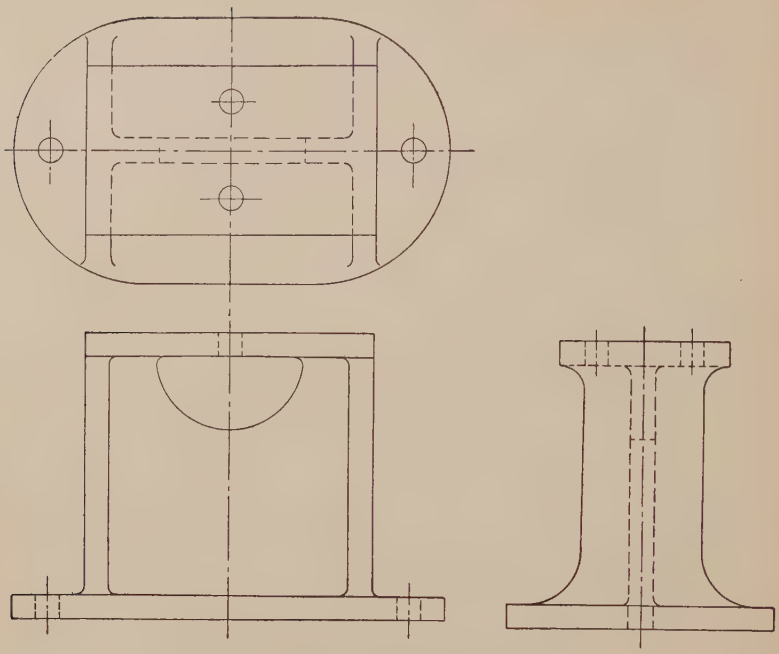

Fig. 410.—Frame support.

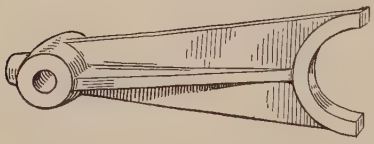

Fig. 411.—Countershaft shifter fork.

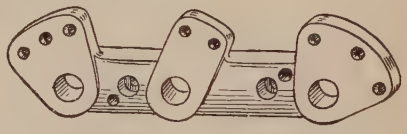

Fig. 412.—Hand shifter bracket.

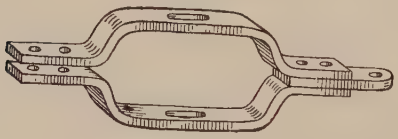

Fig. 413.—Shifter yoke.

Fig. 414.—Tongs forging.

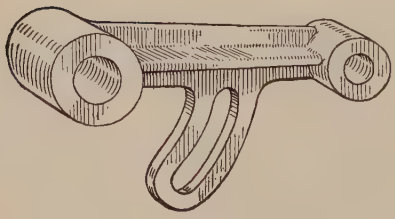

Fig. 415.—Adjustable arm.

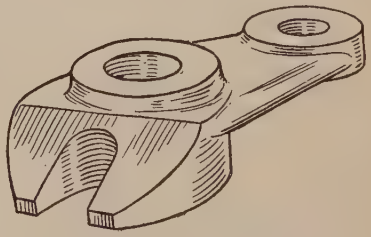

Fig. 416.—Gear shifter lever.

PROBLEMS

162. The problems following are given as preliminary studies in dimensioning, on which to apply the principles of the chapter. Every working drawing problem is of course a dimensioning problem.

Group I.—1, 2, 3, 4, 5, 6. Figs. 405 to 410. The figures given are half-size. Draw them full-size and dimension completely. Assume and indicate finished surfaces.

Group II.—7, 8, 9, 10, 11, 12. Figs. 411 to 413. Make freehand orthographic sketches and show the location of all dimensions according to the rules for dimensioning, by adding dimension lines with arrow heads, leaving blank spaces for figures. Fill in the blank spaces with consecutive numbers indicating the order in which the drawing would be dimensioned.

CHAPTER XI

Bolts, Screws, Keys, Rivets and Pipe

163. The previous chapters of this book have been devoted to the theory or grammar of the language of drawing, and the problems and illustrations have been largely separate pieces. In the practical application of the language in making working drawings there occurs the necessity of representing the methods of fastening parts together, either with permanent fastenings, as rivets, or with removable ones, as bolts, screws and keys. The engineer must know the fundamental forms of these fastening parts and be thoroughly familiar with the conventional method of their representation.

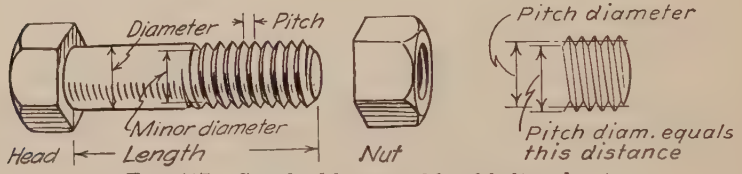

Fig. 417.—Standard hexagonal head bolt and nut.

The one occurring most frequently is of course the bolt, which is illustrated in pictorial form in Fig. 417. It will be noted that the nominal length of a bolt is its length under the head, and the diameter is the size of the shaft on which the threads are cut. The curve of the thread is a helix.

164. The Helix.—A helix is the line of double curvature generated by a point revolving at a uniform rate about an axis while moving along uniformly in the direction of the axis. Thus a point on the tool cutting a thread on a rotating shaft cuts a helix. The surface of the thread is a helicoid. The distance advanced parallel to the axis in one revolution is called the *lead.*

A more general definition might be stated thus—*a helix is a space curve generated by a point moving uniformly along a straight line while the line revolves uniformly about another line as an axis.*

If the moving line is parallel to the axis it will generate a cylinder, and the word "helix" alone always means a cylindrical

helix, as discussed above. If the moving line intersects the axis (at an angle less than 90°) it will generate a cone and the curve made by the moving point will be a "conical helix." When the angle becomes 90 degrees the helix degenerates into a spiral.

165. To Draw the Projection of a Helix.—Fig. 418. Divide the circle of the end view of the cylinder into a number of equal parts, and the lead into the same number. As the point moves around through one division it will advance a proportional amount of the lead; when half way around the cylinder it will have advanced one-half the lead. Thus the curve may be found

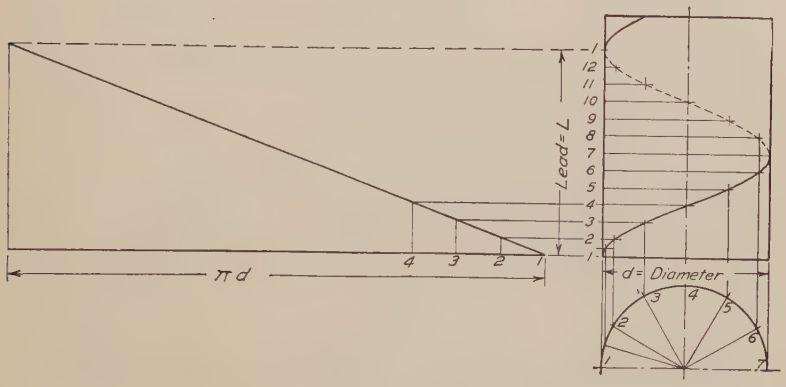

FIG. 418.—The helix and its development.

by projecting the elements represented by divisions of the circle to intersect lines drawn through corresponding divisions of the lead. If the cylinder be developed the helix will appear on it as a straight line inclined at an angle whose tangent is $L/\pi d$. The conical helix is drawn similarly, the lead being measured along the axis.

166. Forms of Threads.—Screws are used for fastenings, for adjustment and for transmitting power or motion. For these different purposes several different forms of threads are in use. Fig. 419. For fastenings the *American Standard* V-thread with its crest and root flattened, is used in this country. The American Standard is discussed in detail in a following paragraph.

The *sharp* V at 60 degrees is still used to some extent although it has little to recommend it except its increased holding power for set screws. The British Standard is the *Whitworth* thread cut at 55 degrees, with tops and bottoms rounded one-sixth of

the depth of the triangle, as shown in the figure. The *British Association Standard* at 47½ degrees is used on very small screws. The French and International Standards have the same form as the American Standard but are dimensioned in the metric system.

For transmitting power or motion these V-shapes are not desirable, as part of the thrust tends to burst the nut. The *square* thread avoids this as it transmits all the force parallel to the axis of the screw. It can have, evidently, only half the number of threads in the same space as a V-thread of the same pitch and

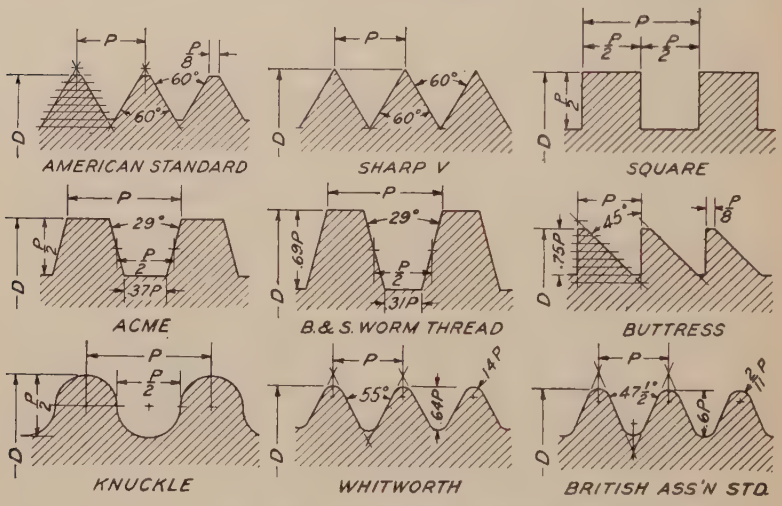

Fig. 419.—Forms of screw threads.

thus in shear is only half as strong. A modification used very generally is the *Acme* or 29 degree thread. It is stronger, much more easily cut and permits the use of a disengaging or split nut, which cannot be used on a square thread. The Brown and Sharpe *worm thread* for transmitting power to a worm wheel resembles the Acme thread but has a longer tooth. The *buttress* thread for transmitting power in one direction has the advantage of the square thread and the strength of the V-thread. It is sometimes called the breech-lock thread as it is used to take the recoil in guns. The *knuckle* thread is used for rough work and can be cast in a mold. It may be seen in shallower form in sheet-metal rolled threads as on an ordinary incandescent lamp.

167. Threads are always understood to be single and right-hand unless otherwise specified. A single thread has one thread

of whatever section cut on the cylinder. When it is desired to give a more rapid advance without using a coarser thread, two or more threads are cut side by side, giving double, triple, etc., threads, as illustrated in Fig. 420.

A *right-hand* thread advances into the nut when turned clockwise. A *left-hand* thread advances counter clockwise. It can

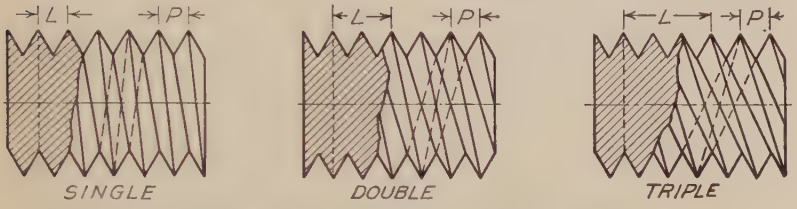

Fig. 420.—Single, double and triple threads.

be distinguished from a right-hand thread by the direction of the slant. It is always marked plainly L.H. on a drawing.

The *pitch* of a thread is the distance from center to center of consecutive threads. The *lead* has already been defined as the distance advanced in one revolution. In a single thread, therefore, the pitch and lead are equal, in a double thread the lead is twice the pitch, in a triple thread it is three times the pitch.

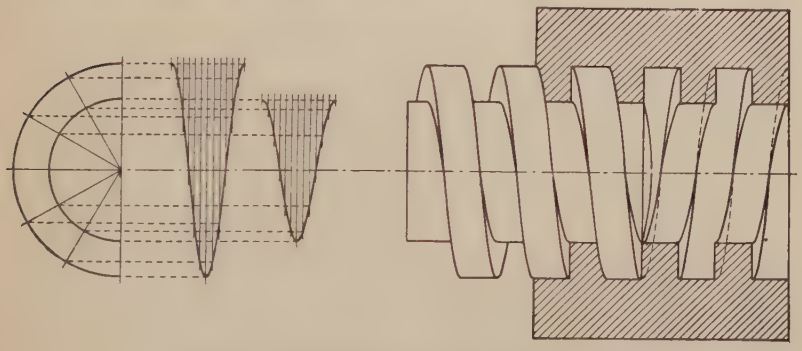

Fig. 421.—Square thread, external and internal.

168. To draw a screw-thread we must know the shape of the thread, the diameter of the shaft on which it is cut, the number of threads per inch, and whether single or multiple and right or left-hand. For true representation the thread shapes can be drawn with the lines of their crests and roots shown as helices having the same pitch but different diameters, as illustrated in Fig. 421. If many threads are to be drawn in this way a templet

may be made by laying out the projections of the helices on a piece of cardboard or thin wood and cutting out with a sharp knife.

This drawing of the actual curves of a screw is a laborious proceeding and is rarely done, and then only on screws of large

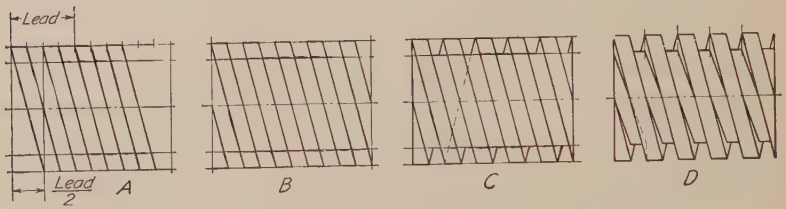

FIG. 422.—Stages in drawing square threads.

diameter. In ordinary practice the labor is altogether unnecessary, so the helix is conventionalized into a straight line. A square thread screw would thus be drawn as shown in stages in Fig. 422, which, while not so realistic or pleasing as Fig. 421, requires very much less time.

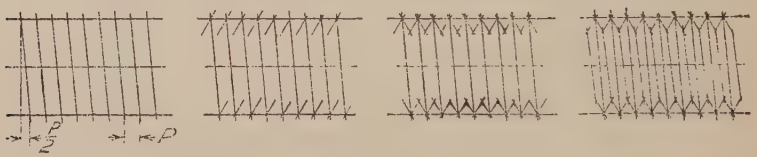

FIG. 423.—Stages in drawing V threads.

A V-thread would be drawn in the stages shown in Fig. 423, spacing the pitch on the lower line only, and should be inked in the same order. The flats of crest and root are not drawn.

169. Conventional Threads.—Since threads occur so frequently in machine drawing a conventional symbol is used for them and the thread profiles are not drawn, except on large diameters. Up to the present time there has been no standard symbol and a dozen or more different conventional methods of indicating threads have been used. Of these the one used perhaps oftenest is *A* in Fig. 424. The American Standards Association, recognizing the desirability of uniform drafting-room practice, recommends the adoption of legible, time-saving symbols and the tentative report of the committee advises the use of *B*, Fig. 424,

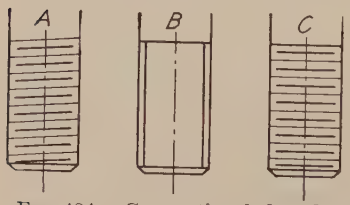

FIG. 424.—Conventional threads.

as a regular symbol on shop drawings, with *C* on drawings where a more pictorial symbol is desired.

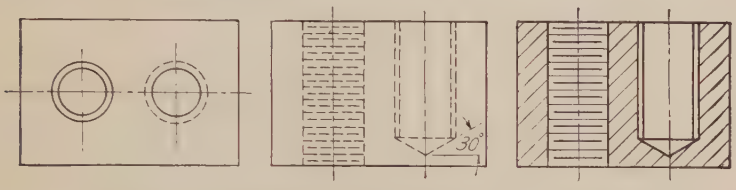

FIG. 425.—Threaded holes in plan, elevation and section.

Figure 425 shows the conventional symbols for threaded holes in plan, elevation and section. In tapped holes not extending through the piece the "drill point" or approximate shape of the bottom of the hole (drawn at 30 degrees) should always be shown.

When two pieces screwed together are shown in section the thread shapes must be drawn, as in Fig. 426.

It is not necessary to draw the threads on the whole length of a long screw. They may be started at each end as in Fig. 427.

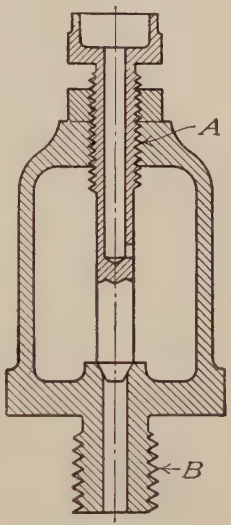

FIG. 426.—Threads in section.

170. American (National) Standard Screw Threads.—The form of the American Standard is a V-shape with the crest flattened to a width equal to one-eighth of the pitch and the root filled in a like amount. This form, designed in 1864 was originally known as the Seller's profile, and later became the "United States Standard." In May, 1924, the American Engineering Standards Committee (now the *American Standards Association*) approved and later published full detailed specifications and limit

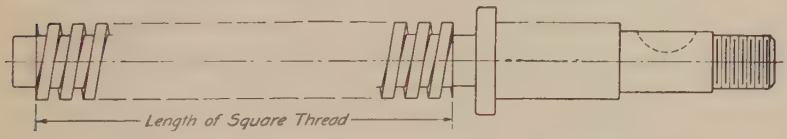

FIG. 427.—Thread representation on a long screw

dimensions for all sizes of threads. This work was sponsored by the American Society of Mechanical Engineers (A.S.M.E.) and

the Society of Automotive Engineers (S.A.E.). Two thread series were adopted—a coarse and a fine, as follows:

The American Standard Coarse-thread Series is the former United States Standard, supplemented in the sizes below $\frac{1}{4}$ inch by a part of the A.S.M.E. standard.

The American Standard Fine-thread Series is the former "Regular Screw-thread Series" of the S.A.E., supplemented in sizes below $\frac{1}{4}$ inch by the A.S.M.E. "Fine-thread Series."

The Committee has standardized all the nomenclature concerning screw threads; for example, the term *major diameter* replaces "outside diameter"; and *minor diameter* replaces "root diameter" and also "inside diameter" as applied to the thread of a nut. *Pitch diameter* is "the diameter of an imaginary cylinder the surface of which would pass through the threads at such points as to make equal the width of the threads and the width of the spaces cut by the cylinder."

171. Classification of Fits.—One of the important features of the new standard is the standardization of classes of fits between bolt and nut. These are:

Loose Fit (*Class* 1).—Recommended as a commercial standard for tapped holes in the numbered sizes only. May be used with screws of other classes to obtain quality of fit desired.

Free Fit (*Class* 2).—Includes the great bulk of screw-thread work of ordinary quality of finished and semi-finished bolts and nuts, etc.

Medium Fit (*Class* 3).—Includes the better grade of interchangeable screw-thread work, such as automobile bolts and nuts.

Close Fit (*Class* 4).—Includes screw-thread work requiring a fine snug fit, somewhat closer than the medium fit, such as high-grade air-craft parts, etc. In this class of fit selective assembly of parts may be required.

The Standard provides detailed tables of dimensions and tolerances for the manufacture of screws to meet these classifications.

172. Identification Symbols.—For specifying American (National) Standard threads on drawings, in correspondence, in stock lists etc., the diameter (or screw number) and number of threads per inch are given first, then the initial letters of the series—N.C. (National Coarse) or N.F. (National Fine) followed by the class of fit. If left-hand thread the letters L.H. follow the number of threads.

Examples: 1″-8-N.C.-2 is a threaded part one inch in diameter eight threads per inch, American (National) Coarse Thread Series, Class 2 (Free) Fit.

1″-14-L.H.-N.F.-4 is a threaded part one inch in diameter, fourteen threads per inch, left hand American (National) Fine Thread Series, Class 4 (Close) Fit.

1″-12-N-3 is a threaded part one inch in diameter, twelve threads, National form but special pitch, Class 3 (Medium) Fit.

173. Extra Fine Screw Thread Series.—In addition to the American Coarse and Fine Series, the S.A.E. has a third series of finer threads for use with light sections, fine adjustments, and where jar and vibration are important factors.

The following table gives a comparison of the number of threads per inch for American Standard Coarse (N.C.) and Fine (N.F.) series, and S.A.E. Extra Fine, with the tap drill sizes for each.

AMERICAN STANDARD COARSE AND FINE AND S.A.E. EXTRA-FINE THREADS
With Minor Diameters for Tap-drill Sizes for Five-sixths Depth of Thread

Diameter	Threads per inch			Tap drill sizes		
	Coarse N C	Fine N F	Extra fine E F	Coarse N C	Fine N F	Extra fine E F
¼	20	28	36	0.1958	0.2113	0.2199
5/16	18	24	32	0.2523	0.2673	0.2786
⅜	16	24	32	0.3073	0.3298	0.3411
7/16	14	20	28	0.3601	0.3833	0.3988
½	13	20	28	0.4167	0.4458	0.4613
9/16	12	18	24	0.4722	0.5023	0.5173
⅝	11	18	24	0.5265	0.5648	0.5798
¾	10	16	20	0.6417	0.6823	0.6958
⅞	9	14	20	0.7547	0.7976	0.8208
1	8	14	20	0.8646	0.9226	0.9458
1⅛	7	12	18	0.9703	1.0347	1.0648
1¼	7	12	18	1.0953	1.1597	1.1898
1½	6	12	18	1.3195	1.4097	1.4398
1¾	5	12	16	1.5334	1.6597	1.6823
2	4½	12	16	1.7594	1.9097	1.9323
2¼	4½	12	16	2.0094	2.1597	2.1823
2½	4	12	16	2.2294	2.4097	2.4323
2¾	4	12	16	2.4794	2.6597	2.6823
3	4	10	16	2.7294	2.8917	2.9323
over 3 to 6	....	10	16			
over 6	....	8	16			

174. American Standard Bolts and Nuts.—The former "United States Standard" for the sizes of bolt heads and nuts is

being replaced by the "American Standard Wrench Head Bolts and Nuts and Wrench Openings," and commercial manufacturers of bolts and screws are making their products to conform to the new standard. It provides a more economical use of material, fewer sizes of bar stock and wrenches and is a decided advance over the U. S. Standard.

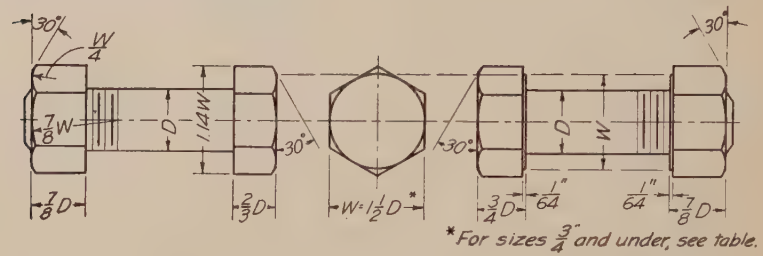

Fig. 428.—Am. St'd rough and semi-finished hex. head bolt.

Fig. 429.—Am. St'd finished hex. head bolt.

The American Standard provides two sets of formulas for square and hexagonal bolt heads and nuts, one for rough and semi-finished, the other for finished heads and nuts. The width across flats of both square and hexagonal heads and nuts is $1\frac{1}{2}D$ (D = diam. of bolt) for sizes over $\frac{3}{4}$-inch. Below this

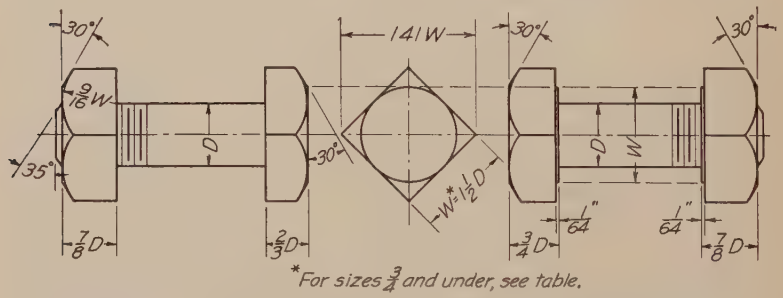

Fig. 430.—Am. St'd rough and semi-finished square head bolt.

Fig. 431.—Am. St'd finished square head bolt.

there are variations between rough and finished bolts and adjustments in the sixteenth-inch sizes to eliminate thirty-second-inch size wrench openings, all of which dimensions are found in the table on page (199).

Figures 428 and 429 show the American Standard formula dimensions for hexagonal bolts. Note that the height of rough and semi-finished heads is $\frac{2}{3}D$ while that of finished heads is

$\frac{3}{4}D$, and that finished heads and nuts are washer faced, the washer face being $\frac{1}{64}''$ thick and its diameter equal to the short diameter of the head or nut.

Figures 430 and 431 give the formula dimensions for square head bolts and nuts.

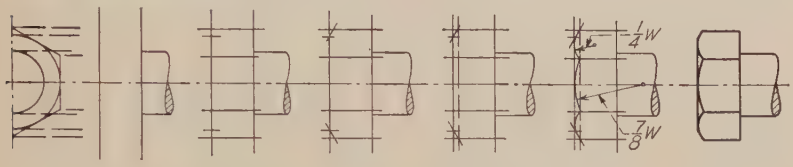

Fig. 432.—Stages in drawing a hex. head.

175. To Draw a Bolt Head and Nut.—Bolt heads and nuts are always shown on a drawing "across corners" on both views, unless there is some special reason for drawing them across flats.

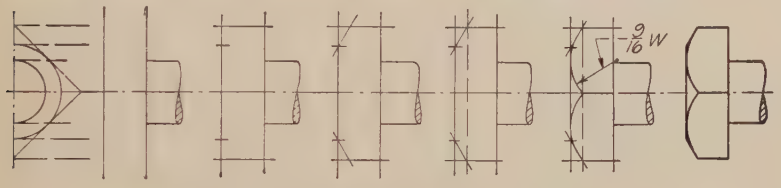

Fig. 433.—Stages in drawing a square head.

Figure 432 shows the stages of drawing a hex. head. First lay off the thickness of the head, then draw one-half the end view and project to the required view as shown. The chamfer on the head and nut is 30 degrees with top surface.

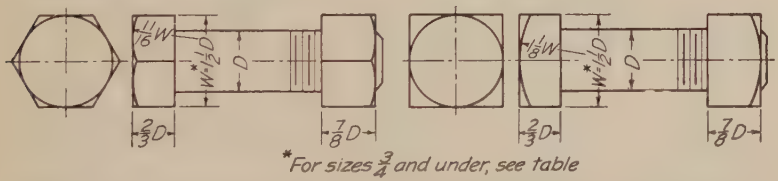

Fig. 434.—Hex. head across flats. Fig. 435.—Square head across flats.

The shape of the bolt point has not yet been standardized, but for finished bolts, as for cap screws, the "flat-and-chamfer" point is recommended. The tentative standard reads, "The points of all cap screws shall be flat . . . and chamfered at an angle of 35 degrees with the surface of the flat, $+5°$, $-0°$, the chamfer to extend to the bottom of the thread and the corners of the chamfer to be slightly rounded." The proposed length of thread on bolts is $1\frac{1}{2}D + \frac{1}{4}''$ for both coarse and fine threads.

Figure 433 is a similar progressive drawing for a square head. Figures 434 and 435 show the method of drawing hex. and square heads across flats.

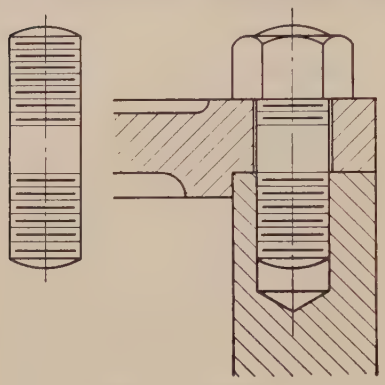

Fig. 436.—Studs.

The table on page (199) will be convenient in drawing American Standard bolts and nuts.

176. United States Standard Bolts.—While the American Standard supersedes all other existing standards some occasion may arise requiring a drawing of the old U. S. Standard. Its proportions are $W = 1\frac{1}{2}D + \frac{1}{8}''$ for both hex. and square bolts and nuts. Height of bolt head $H = \frac{W}{2}$; thickness of nut $T = D$; chamfer 45 degrees.

177. Castellated Nuts.—In automotive work the American Fine Thread Series, which was originally the S.A.E. series, is

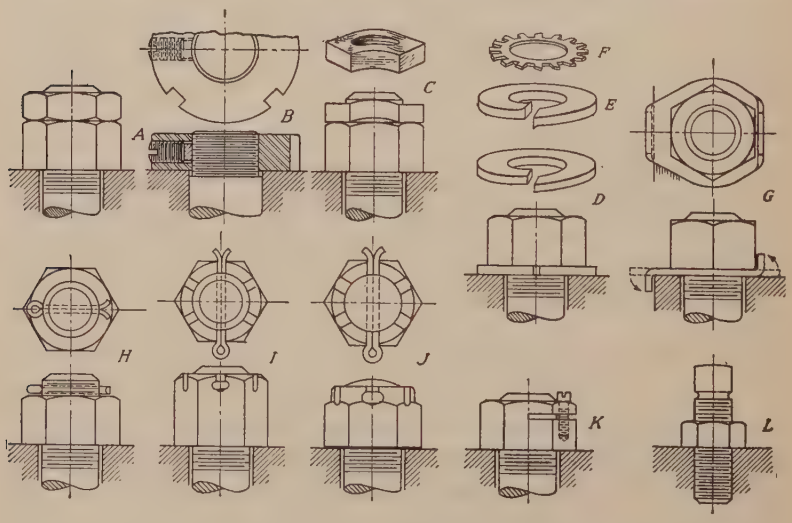

Fig. 437.—Locking devices.

used to a large extent, and at many points castellated nuts are used as at I in Fig. 437.

In aeronautical work, on account of the light tubular sections, the S.A.E. extra-fine series is used, with S.A.E. aeronautic bolts and castellated nuts of the form *J*, Fig. 437. For their proportions see S.A.E. handbook.

AMERICAN STANDARD SQUARE AND HEXAGONAL BOLT HEADS AND NUTS

Diam., *D*	Threads per inch (coarse)	Bolt Heads				Nuts	
		Rough and semi-finished		Finished		Both rough and finished	
		W	*H*	*W*	*H*	*W*	*T*
1/4	20	3/8	11/64	7/16	3/16	7/16	7/32
5/16	18	1/2	13/64	9/16	15/64	9/16	17/64
3/8	16	9/16	1/4	5/8	9/32	5/8	21/64
7/16	14	5/8	19/64	3/4	21/64	3/4	3/8
1/2	13	3/4	21/64	13/16	3/8	13/16	7/16
9/16	12	7/8	3/8	7/8	27/64	7/8	31/64
5/8	11	15/16	27/64	15/16	15/32	15/16	35/64
3/4	10	1 1/8	1/2	1 1/8	9/16	1 1/8	21/32
7/8	9	1 5/16	19/32	1 5/16	21/32	1 5/16	49/64
1	8	1 1/2	21/32	1 1/2	3/4	1 1/2	7/8
1 1/8	7	1 11/16	3/4	1 11/16	27/32	1 11/16	1
1 1/4	7	1 7/8	27/32	1 7/8	15/16	1 7/8	1 3/32
1 1/2	6	2 1/4	1	2 1/4	1 1/8	2 1/4	1 5/16
1 3/4	5	2 5/8	1 5/32	2 5/8	1 5/16	2 5/8	1 17/32
2	4 1/2	3	1 11/32	3	1 1/2	3	1 3/4
2 1/4	4 1/2	3 3/8	1 1/2	3 3/8	1 11/16	3 3/8	1 31/32
2 1/2	4	3 3/4	1 21/32	3 3/4	1 7/8	3 3/4	2 3/16
2 3/4	4	4 1/8	1 53/64	4 1/8	2 1/16	4 1/8	2 13/32
3	4	4 1/2	2	4 1/2	2 1/4	4 1/2	2 5/8

178. Studs.—Fig. 436. The stud or stud bolt threaded on both ends is used when through bolts are not suitable, for parts which must be removed frequently, such as cylinder heads, chest covers, etc. One end is screwed permanently into a tapped hole, and the projecting studs guide the removable piece to position.

179. Locknuts.—Fig. 437. Many different locking devices to prevent nuts from working loose under vibration are used in machine design. A jam nut *A* is very common. The American Standard jam nut has the same dimensions as the finished hexagonal nut except in thickness, which for sizes 1/4″ to 7/16″ is $\frac{1}{2}D + \frac{1}{32}''$; 1/2″ to 1 1/8″ is $\frac{1}{2}D + \frac{1}{16}''$; 1 1/4″ to 2 1/4″ is $\frac{1}{2}D + \frac{1}{8}''$ and 2 1/2″ to 3″, $\frac{1}{2}D + \frac{1}{4}''$.

At *B* is shown a round nut locked by means of a set screw. A brass plug is placed under the set screw to prevent damage to the thread. This is a common type of adjusting nut used in machine tool practice. At *C* is a locknut in which the threads are deformed after cutting. Spring washers are common devices. In addition to the plain form *D* there are numerous patented variations, as *E* and *F*. *G* is typical of a number of lock washers which are bent after the nut is in place. Spring cotters are used as at *H* or with slotted high nuts as *I*. *J* shows the type of castellated nut used in aeronautical work. *K* and *L* are self-explanatory.

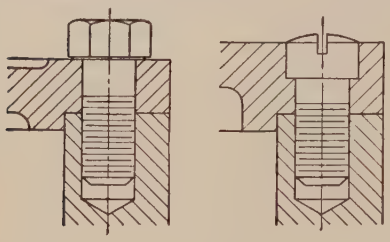

Fig. 438.—Cap screws.

180. Cap Screws differ from bolts in that they are used for fastening two pieces together by passing through a clear hole in one and screwing into a tapped hole in the other. The usual form is the hexagonal head cap screw. The American Standard hex. head is shown in Fig. 438 and the sizes given in the accompanying table. A table of various forms of cap screw heads will be found in the Appendix page 438.

181. Machine Screws are used for the same purpose as bolts and cap screws in small work, particularly sheet metal. They are

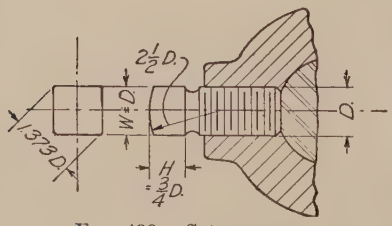

Fig. 439.—Set screw.

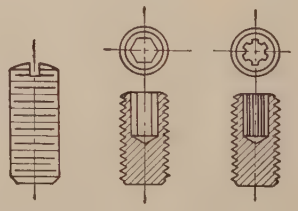

Fig. 440.—Headless set screws.

specified by gage number ranging from No. 0 (.06″ dia.) to No. 30 (.45″). The various forms of heads and a table of sizes are given on page 438.

182. Set Screws are used for holding two parts in relative position, being screwed through one part and having the point set against the other. The American Standard square head set screw is shown in Fig. 439. Headless set screws, Fig. 440, are made for moving parts to comply with the safety code of factory

inspection laws, which are very strict regarding the use of projecting screws on moving parts. Figure 441 shows various set screw points for different purposes.

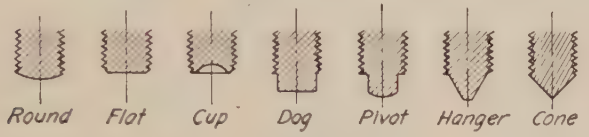

Fig. 441.—Set screw points.

American Standard Finished Hexagonal Cap Screw Heads
Threads are Coarse Series

Diameter, D	Threads per inch, coarse	Width across flats W	Height of head H
$\frac{1}{4}$	20	$\frac{7}{16}$	$\frac{3}{16}$
$\frac{5}{16}$	18	$\frac{1}{2}$	$\frac{15}{64}$
$\frac{3}{8}$	16	$\frac{9}{16}$	$\frac{9}{32}$
$\frac{7}{16}$	14	$\frac{5}{8}$	$\frac{21}{64}$
$\frac{1}{2}$	13	$\frac{3}{4}$	$\frac{3}{8}$
$\frac{9}{16}$	12	$\frac{13}{16}$	$\frac{27}{64}$
$\frac{5}{8}$	11	$\frac{7}{8}$	$\frac{15}{32}$
$\frac{3}{4}$	10	1	$\frac{9}{16}$
$\frac{7}{8}$	9	$1\frac{1}{8}$	$\frac{21}{32}$
1	8	$1\frac{5}{16}$	$\frac{3}{4}$
$1\frac{1}{8}$	7	$1\frac{1}{2}$	$\frac{27}{32}$
$1\frac{1}{4}$	7	$1\frac{11}{16}$	$\frac{15}{16}$

American Standard Square Head Set Screw Heads
Threads Either Fine or Coarse Series

Diameter, D	Threads per inch		Width across flats, W	Height of head, H
	Coarse	Fine		
$\frac{1}{4}$	20	28	$\frac{1}{4}$	$\frac{3}{16}$
$\frac{5}{16}$	18	24	$\frac{5}{16}$	$\frac{15}{64}$
$\frac{3}{8}$	16	24	$\frac{3}{8}$	$\frac{9}{32}$
$\frac{7}{16}$	14	20	$\frac{7}{16}$	$\frac{21}{64}$
$\frac{1}{2}$	13	20	$\frac{1}{2}$	$\frac{3}{8}$
$\frac{9}{16}$	12	18	$\frac{9}{16}$	$\frac{27}{64}$
$\frac{5}{8}$	11	18	$\frac{5}{8}$	$\frac{15}{32}$
$\frac{3}{4}$	10	16	$\frac{3}{4}$	$\frac{9}{16}$
$\frac{7}{8}$	9	14	$\frac{7}{8}$	$\frac{21}{32}$
1	8	14	1	$\frac{3}{4}$
$1\frac{1}{8}$	7	12	$1\frac{1}{8}$	$\frac{27}{32}$
$1\frac{1}{4}$	7	12	$1\frac{1}{4}$	$\frac{15}{16}$
$1\frac{1}{2}$	6	12	$1\frac{1}{2}$	$1\frac{1}{8}$

183. Wood Screws have the threads so proportioned as to conform to the relative holding strengths of wood and metal.

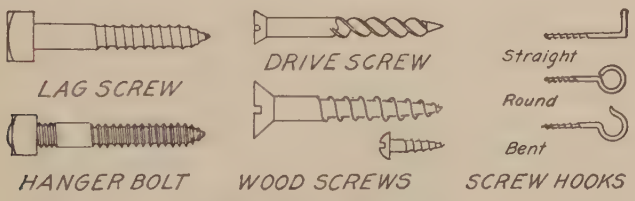

Fig. 442.—Wood screws.

They are usually drawn as shown in Fig. 442 which shows also a lag screw, a wood screw with a bolt head used for fastening machinery to wood supports.

184. Other Forms.—Figure 443 illustrates the method of representing various other bolts and screws. Some of these have been standardized by the American Standards Association. See publications, page 435. For many other special forms the various engineering handbooks may be consulted.

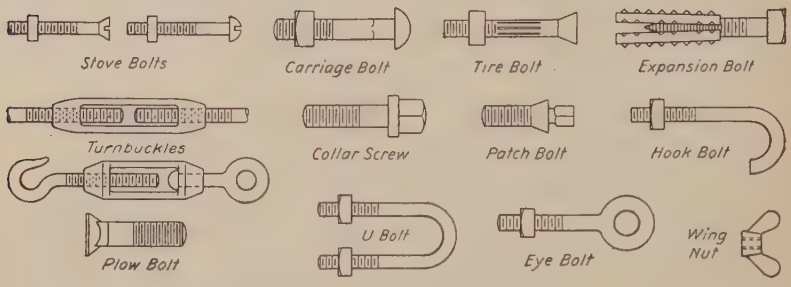

Fig. 443.—Various bolts and screws.

185. Dimensioning and Specifying Bolts and Screws.—*Bolts* if standard, are dimensioned as in Fig. 444 by giving the diameter and length under the head to the point and specifying the thread as described in paragraph 172. If special, give complete information. *Studs*, give diameter and length, with length and specification of thread on each end. *Cap screws*, give diameter, length under head (over-all for countersunk heads), length and specification of thread. *Machine screws*, give number, length, under the head for round and fillister heads, over-all for countersunk heads, length and specification of thread. *Set screws*, give diameter, thread specification, and length under head to extreme point. For headless set screws give over-all length. For various safety-types give name and manufacturer's number. *Wood screws*, give number, length, style of head and finish. *Lag screws*, give diameter, length under head, kind of head. *Screw hooks* and *screw eyes*, diameter and length over-all. *Boiler patch bolts*, for cup head, length under head, for bevel head, length from largest diameter of bevel.

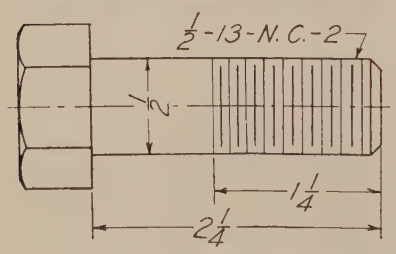

Fig. 444.—St'd bolt dimensioning.

186. Keys.—In machine drawing there is frequent occasion for representing keyed fastenings as used in securing wheels,

cranks etc., to shafts. One of the commonest forms is the Woodruff key, a flat segmental disc with either round or flat bottom, as shown in Fig. 445. They are specified by number, and a table of standard sizes is given on page 443. A good basic rule for proportioning a Woodruff key to a given shaft is to have the width of the key one-fourth the diameter of the shaft and its radius equal to the radius of the shaft, selecting the standard key that comes nearest to these proportions. In drawing Woodruff keys care should be taken to place the center for the arc above the top of the key to a distance equal to one-half the thickness of the saw used in making the key. This amount is given in Column *E* in the table on page 443.

Fig. 445.—Woodruff keys.

187. Square and flat keys both plain and tapered have a variety of applications. Figure 446 shows at *A* a square key

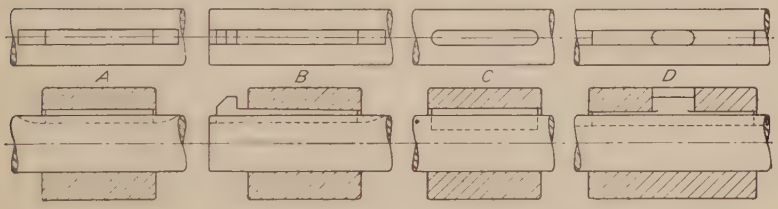

Fig. 446.—Square and flat keys.

and at *B* a gib head taper key. Square and flat stock keys and taper stock keys have been standardized by the American Standards Association and a table of sizes for use with various diameters of shafts is given on page 442. At *C* is a "Pratt and Whitney" key with round ends. A feather is a straight key which allows a piece to slide lengthwise on a shaft while preventing rotation on the shaft. A sliding feather sometimes has a gib on each end and sometimes is made with one or more projections as at *D*. With these the keyway must of course extend to the end of the shaft.

Fig. 447.—Keys for light duty.

Figure 447 shows three keys for light duty, the saddle key, the flat key and the pin or Nordberg key, which is used at the

end of a shaft, as, for example, in fastening a handwheel. A tapered pin is driven into a tapered hole drilled into shaft and hub together as deep as the length of the hub.

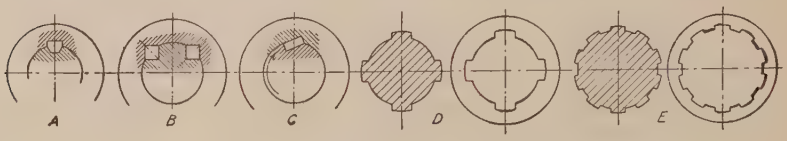

Fig. 448.—Keys for heavy duty.

Figure 448 shows some forms of heavy-duty keys. *A* is the Barth key, an improvement on the flat spline; *B* the Kennedy key, *C* the Lewis key for driving in one direction, and *D* and *E* two forms of splined shaft, widely used instead of keyed shafts.

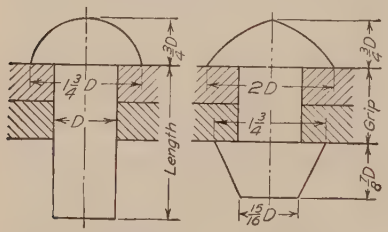

Fig. 449.—Rivets.

188. Rivets.—Rivets are used for making permanent fastenings, generally between pieces of sheet or rolled metal. They are round bars of steel or wrought iron with a head formed on one end and are put in place red-hot so that a head may be formed on the other end by pressing or hammering. Rivet holes are punched, punched and reamed, or drilled, $\frac{1}{16}''$ larger than the diameter of the rivet, and the shank of the rivet is made just long enough

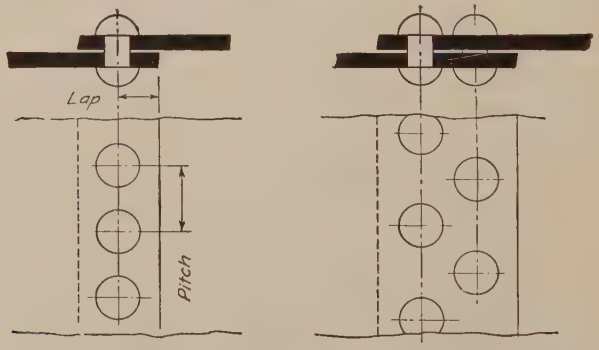

Fig. 450.—Lap joints.

to give sufficient metal to fill the hole completely and make the head.

It is not within our scope to consider the design of riveted joints, but we are concerned with the methods of representation.

The two general uses of rivets are in structural steel construction and in boiler and tank work. In the former only two kinds of heads are needed, button heads and countersunk heads. The standard symbols used in structural work are given on page 351.

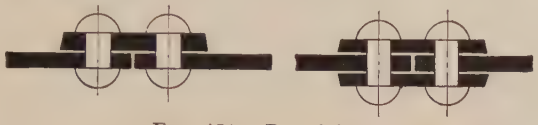

FIG. 451.—Butt joints.

For boiler and tank work, pressure against the head as well as shear must be considered and the heads shown in Fig. 449 are used.

Plates are connected by either lap joints or butt joints. Single and double riveted lap joints are illustrated in Fig. 450 and double straps in Fig. 451.

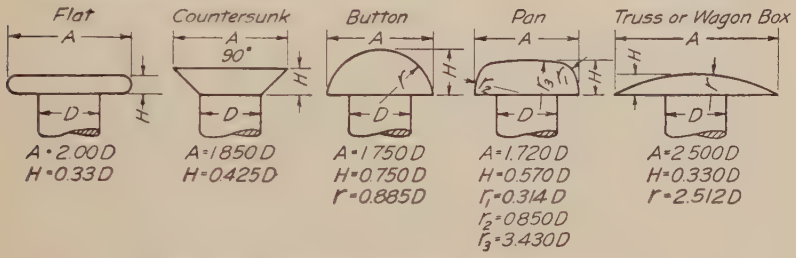

FIG. 452.—American Standard small rivet heads.

The American Standard proportions for the heads of small rivets are shown in Fig. 452.

189. Helical Springs.—Figure 453 shows the method of drawing the true projection of a helical spring with round section, by constructing the helix of the center line of the section, drawing on it a number of circles of the diameter of the wire and drawing an envelope curve tangent to the circles. This surface is known geometrically as a serpentine. Usually springs are drawn with straight lines as in Fig. 454 which shows elevation and section of both conical and cylindrical helical springs.

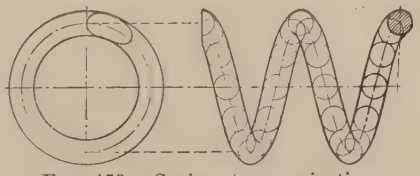

FIG. 453.—Spring, true projection.

190. Pipe.—A familiarity with pipe and pipe fittings is necessary not only for making piping drawings but because pipe as a material of construction can often be used to advantage.

Standard pipe of steel or wrought iron as commonly used is designated by its nominal inside diameter, which differs somewhat from the actual inside diameter (early pipe manufacturers made the metal in the smaller sizes much too thick and in correcting this took the excess from the inside to avoid changing the sizes of fittings). For pressures heavier than 125 pounds "extra" and "double extra" heavy pipe having the same outside diameter

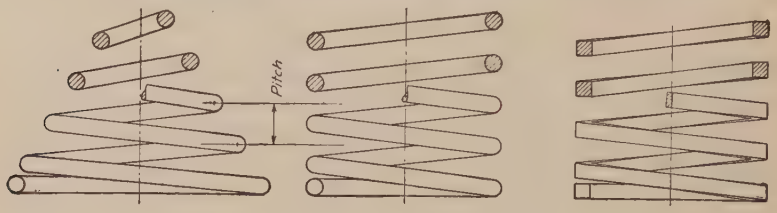

FIG. 454.—Springs, conventional.

as standard weight pipe of the same nominal size, the added thickness being on the inside, is used. Thus the outside diameter of 1″ pipe is 1.315″, the inside diameter of standard 1″ pipe 1.05″, of 1″ extra strong 0.951″ and of XX, 0.587″. Pipe over twelve inches in diameter is designated as O.D. (outside diameter) pipe and is specified by its outside diameter and thickness of metal.

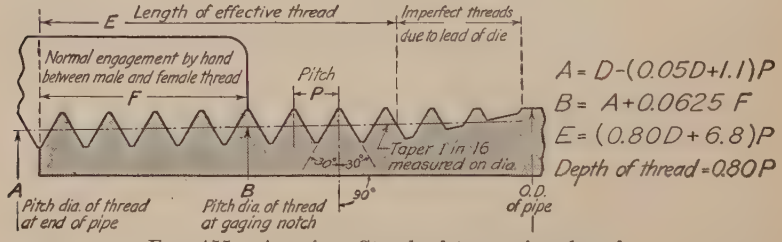

FIG. 455.—American Standard taper pipe thread.

Brass and copper tubing is made in outside diameters of $\frac{1}{8}$″ to 10″. The small sizes are very flexible and are often used for oil piping in pressure oiling systems. Brass pipe is best for hot-water piping. Lead pipe and lead-lined iron pipe is used in chemical work. Cast-iron pipe is used for water and gas in underground mains, and for drains in buildings.

Pipe is usually threaded on the ends for the purpose of screwing into fittings and making connections. The American Standard pipe thread, as adopted by the American Engineering Standards

Committee, is illustrated in Fig. 455. The threads are cut on a taper so that the distance the pipe enters a fitting is fixed and a tight joint insured.

191. Pipe Fittings.—Pipe fittings are the parts used in connecting and "making up" pipe. They are usually either cast iron or malleable iron except couplings, which are wrought or malleable iron, and are designated by the nominal size of the pipe with which they are used. Some of the more commonly used fittings are shown in Fig. 456.

Straight sections of pipe come in 12- to 20-feet lengths, and are connected by couplings, short cylinders threaded on the inside. A right-hand *coupling* has right-hand threads at both

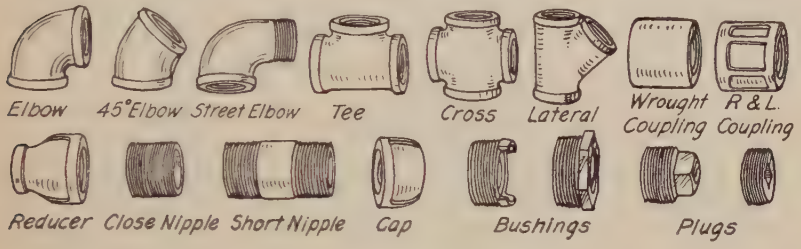

Fig. 456.—Screwed fittings.

ends. To close a system, although a union is preferable, a *right-and-left coupling* is sometimes used. It is readily distinguished by the ribs on the outside, four up to one inch and six on sizes larger than one inch. Pipes are also connected by screwing them into cast iron flanges and bolting the flanges together. It is recommended that flanged fittings be used on all systems over four inches unless the pressures are very low.

Nipples are short pieces of pipe threaded on both ends. If the threaded portions meet it is a *close nipple.* If there is a short unthreaded portion it is a *short nipple.* Long and extra long nipples range in length up to 12 inches.

A *cap* is used to close the end of a pipe. A *plug* is used to close an opening in a fitting. A *bushing* is used to reduce the size of an opening.

Formerly each manufacturer had his own sizes of elbows, tees, and other fittings, but recently the American Standards Association has standardized both screwed and flanged fittings, to the great advantage of all pipe users. Tables giving some of the standards will be found on pages 439 and 440.

192. Specifying Fittings.—Fittings are specified by the name, nominal pipe size and the material. When they connect more than one size of pipe the size of the largest run opening is given first followed by the size at the opposite end of the run. The diagrams of Fig. 457 show the order of specifying reducing fittings. The word "male" must follow the size of the opening if an external thread is wanted.

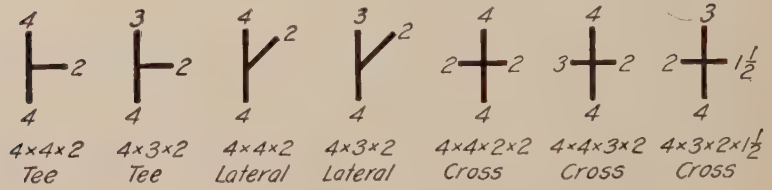

Fig. 457.—Order of specifying reducing fittings.

193. Unions are used to close systems and to connect pipes that require to be taken down occasionally. A screwed union, Fig. 458, is composed of three pieces, two of which, *A* and *B* are screwed firmly on the ends of the pipes to be connected. The third piece *C* draws them together, the gasket *D* forming a tight joint. They are also made with ground joints or with special metallic joints instead of gaskets. Flange unions, in a variety of forms, are used for large sizes of pipe.

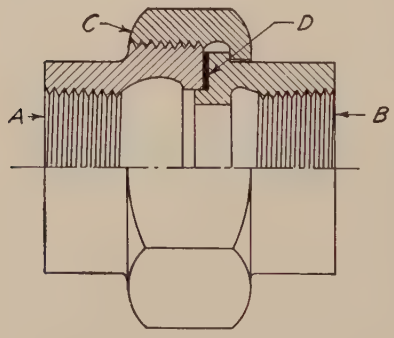

Fig. 458.—Screwed union.

194. Valves.—Figure 459 shows a few types of valves used in piping. *A* is a gate valve, used for water and other liquids, as it allows a straight flow. *B* is a globe valve, used for throttling as in a steam valve; *C* is a swing-check valve permitting flow only in one direction. For heavy liquids a ball-check valve is preferred. *D* is a plug valve, opened and closed with a quarter-turn; *E* is a butterfly valve, opened and closed with a quarter-turn, but not steam tight and used only as a check or damper.

Students should consult manufacturers' catalogues for complete descriptions and dimensions of valves and fittings.

195. Piping Drawings.—When drawing piping to large scale it is represented as in Fig. 460. When drawn to small scale

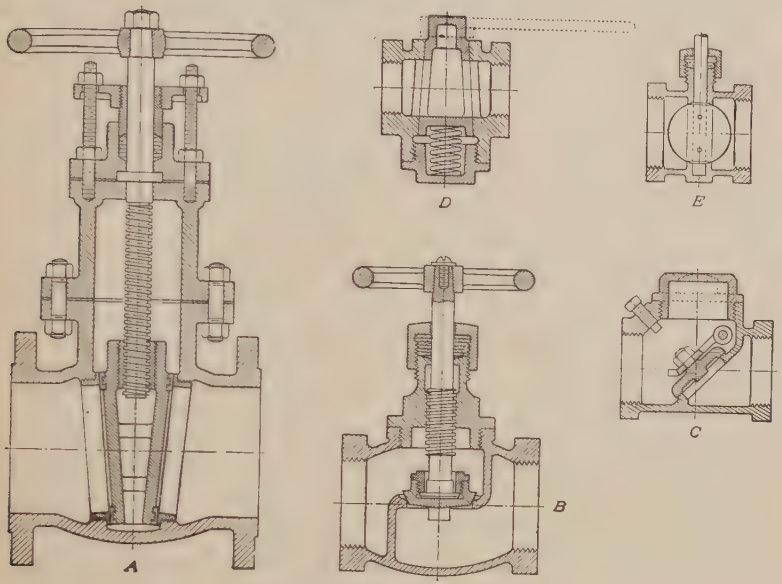

FIG. 459.—Sections of valves.

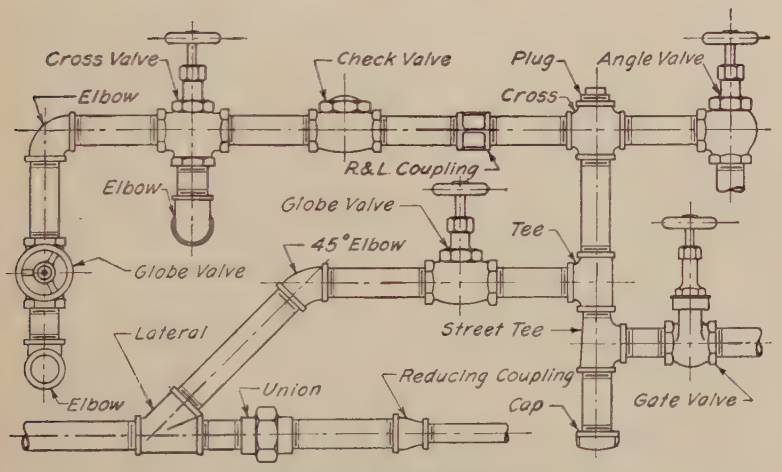

FIG. 460.—Piping—to scale.

or in sketches the conventional representations of Fig. 461 are used, with a single line for the runs of pipe no matter what the diameters may be. The single line should be made heavier

than the other lines of the drawing. The arrangement of views is generally in accord with orthographic projection as in Fig. 462,*A*. Sometimes however it will be found convenient to swing all the piping into one plane and make only one "developed" view, as at *B*. Isometric and oblique drawings are often used

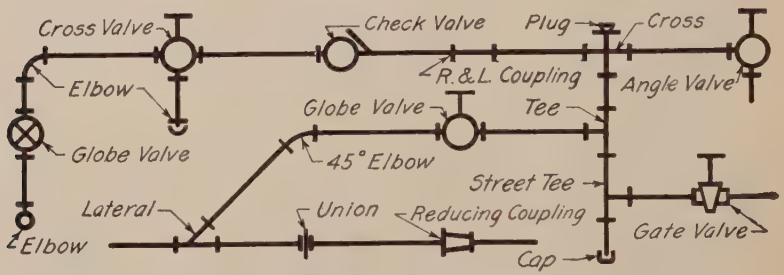

Fig. 461.—Piping, diagrammatic.

to show in one view the position of piping in space, either alone, or in connection with the orthographic or developed make-up drawings, as at *C*.

Dimensions should be given to the centers of piping, valves and fittings in order to locate them. The allowances for make-up

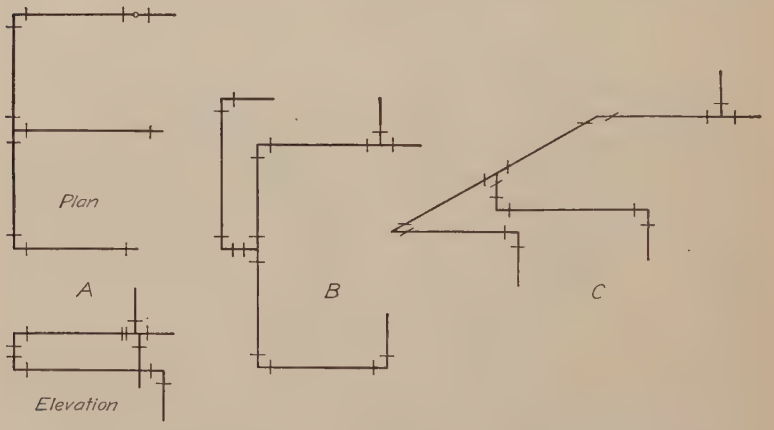

Fig. 462.—Piping in orthographic, developed and pictorial views.

can best be left to the pipe fitter. The maximum space allowed for valves when wide open, and for other piping apparatus should be indicated. The size of pipe should be specified by a note telling its nominal diameter, never by a dimension line on the pipe itself.

Very complete notes are an important essential of all piping drawings and sketches.

When drawing pipe threads and threaded holes some draftsmen draw them straight, others slightly exaggerate the taper.

PROBLEMS

Group I. Helices

1. Draw three complete turns of a helix, diameter 3″, pitch 1¼″.

2. Draw three complete turns of a conical helix with 1½″ pitch, whose large diameter is 4″ and small diameter 1½″.

3. Draw four complete turns, two in section and two in full, of a helical spring made of ⅜″ square stock. Outside diameter 3½″, pitch 1½″.

4. Draw a helical spring 4″ long made of ½″ round stock. Outside diameter 3″, pitch 1″.

Group II. Screw Threads

5. Draw a true projection of a square-thread and section of nut, separated, diameter 2½″, pitch ¾″, length of screw 3″. Nut American Standard (except threads).

6. Same as problem 5 but for V-thread with ½″ pitch.

7. Draw in section the following forms of screw-threads, 1″ pitch: American Standard; Acme; Whitworth; Square.

8. Draw screws 2″ diameter and 3½″ long as follows: Single square thread p. ½″; single V-thread p. ¼″; double V-thread p. ½″; left-hand double square-thread p. ½″.

Group III. Bolts

9. Draw one view of an American Standard hex. head rough bolt and nut, across corners. Diameter 1″, length 5″, length of thread 2¼″.

10. Same as problem 9 for a finished bolt and nut.

11. Same as problem 9 for a square head rough bolt and nut.

12. Same as problem 9 for a square head finished bolt and nut.

13. Draw four ½″ × 1½″ cap screws, each with a different type of head. Name each.

14. Draw the stuffing box and gland, Fig. 463, showing the required fastenings. Dimension fastenings only. On CL's *A* show ½″ hex head cap screws. (Four required.) On CL's *B* show ½″ studs and St'd. hex. nuts.

15. Draw the bearing plate, Fig. 464, showing the required fastenings. On CL's *C* show ½″ hex. bolts and nuts. (Four required.) On C.L. *D* show ½″ safety set screw. On C.L. *E* shows ½″ Am. Std. set screw. Set screws to have cone points.

Problems 14 and 15 may be drawn together on a 12 × 18 sheet.

Group IV. Piping (12 × 18 sheets)

16. Pipe Fittings. Make a complete developed layout of piping (full size), with necessary dimensions and specifications, showing the following: Angle valve, globe valve, cross, 90° ell, 45° ell, Y, street tee, tee, screwed union, cap, and plug. Place angle valve in one of the upper corners of the sheet. Add extra pipe and nipples but no extra fittings to close the system. Use 1½″ pipe and fittings throughout.

17. Pipe Fittings In the upper left-hand corner of sheet draw a 2″ tee. Plug one outlet; in the second, place a 1½″ × 2″ bushing; in remaining outlet use a 2″ close nipple and on it screw a 1½″ × 2″ reducing coupling. Lay out remainder of sheet so as to include the following 1½″ fittings: coupling, globe valve, R & L coupling, angle valve, 45° ell, 90° ell, 45° Y.

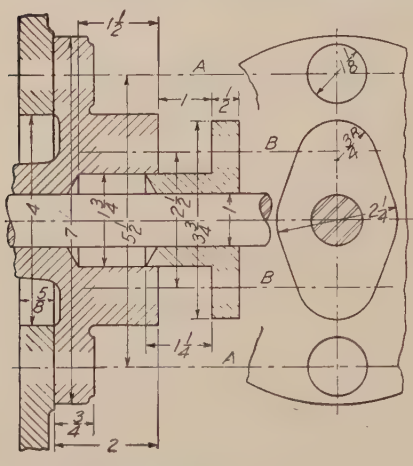

FIG. 463.—Stuffing box and gland.

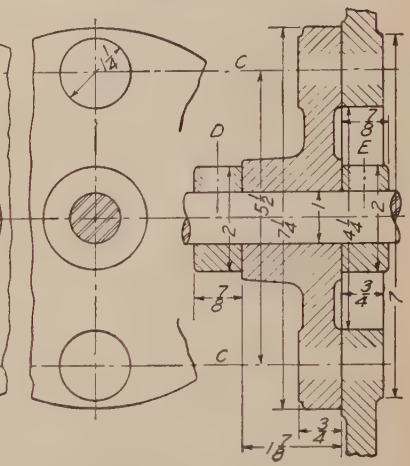

FIG. 464.—Bearing plate.

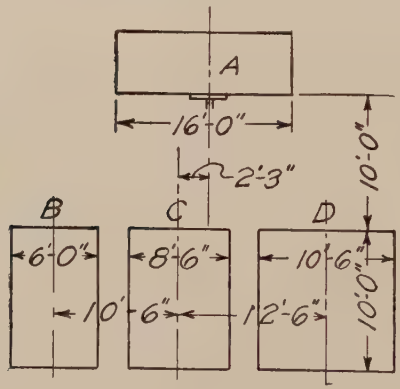

FIG. 465.—Prob. 18.

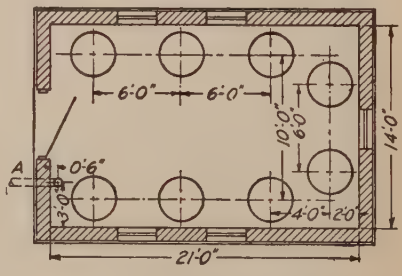

FIG. 466.—Prob. 20.

cross, cap, 3 part union, flange union. Add extra pipe, nipples and fittings so the system will close at the reducing fitting first drawn.

18. In Fig. 465, *A* is a storage tank for supplying the mixing tanks *B*, *C* and *D*, and is located in the same vertical plane directly above them. The capacities of the mixers are in the ratios of 1, 2 and 3. Design (in one view) a piping system with sizes such that, neglecting frictional losses, the three tanks will fill in approximately the same time. So arrange the piping that any one of the tanks can be cut out or removed for repairs without disturb-

ing the others. Use single line conventional representation. Dimension to center lines, and specify the name and size of fittings.

19. Same as problem 18 except in the arrangement of the tanks. In plan the tanks *B*, *C* and *D* are placed at the points of an equilateral triangle whose sides are 12 ft. long. The center of tank *A* is in line with *B* and *C*, and 20 ft. from *B*, the nearer one. Draw plan and developed elevation of the piping system, with single line representation. Dimension to center lines and specify fittings.

20. Figure 466 shows the arrangement of a set of mixing tanks. Make an isometric drawing of an overhead piping system to supply water to each tank. Water supply enters the building through a $2\frac{1}{2}''$ main at point "A" 3 ft. below floor level. Place all pipe 10 ft. above floor level except riser from water main and drops to tanks, which are to end with globe valves 5 ft. above the floor level. Arrange the system to use as little pipe and few fittings as possible. Neglecting frictional losses, sizes of pipe used should be such that they will deliver approximately an equal volume of water to each tank if all were being filled at the same time. The pipe size at the tank should not be less than $\frac{3}{4}''$. Dimension and specify all pipe and fittings.

21. Make a drawing of the system in problem 20. Show the layout in a "developed view" using double line conventional treatment. Dimension from center to center and specify all pipe and fittings.

22. Make a list of pipe and fittings to be ordered for the system in problem 20. Arrange the list in a table, heading the columns as below:

Size	Pipe lengths	Valves		Fittings		Material	Remarks make, kind of threads etc.
		No.	Kind	No.	Kind		

23. Make an oblique drawing of a system of piping to supply the tanks in Fig. 466. All piping except risers shall be in a trench with pipe 1 ft. below floor level. Risers should not run higher than 6 ft. above the floor level. Other conditions are the same as in problem 20.

24. Make a drawing of the system in problem 23. Show the layout in a "developed view," using double line conventional treatment. Dimension from center to center and specify all pipe and fittings.

25. Make a list of pipe and fittings to be ordered for the system in problem 24. Arrange the list in a table, heading the columns as in problem 22.

Group V. Sketching

26. Make a sketch from memory of five methods of locking a nut.

27. Make a sketch from memory of eight kinds of screws.

28. Make a sketch from memory of five kinds of keys.

29. Make a sketch from memory of four different rivet heads.

30. Make a sketch from memory of three types of valves.

CHAPTER XII

Working Drawings

196. A working drawing is a drawing that gives all the information necessary for the complete manufacture or construction of the object represented.

It is a technical description of a machine or structure designed for a certain purpose and place, and should convey all the facts regarding it so clearly and explicitly that no further instruction concerning either manufacture or erection would be required.

The drawing will thus include:

1. The full graphical representation of the shape of every part of the object (*Shape description*).
2. The figured dimensions of all parts (*Size description*).
3. Explanatory notes giving specifications in regard to materials, finish, etc.
4. A descriptive title.

Often, as in architectural and structural drawing, the notes of explanation and information concerning details of materials and workmanship are too extensive to be included on the drawings, so are made up separately in typewritten or printed form and called the "specifications." These are considered as virtually a part of the drawings, the information in them having equal weight and importance. Thus we have the term "drawings and specifications."

197. Choice of Views.—Although pictorial drawings are used to some extent in special cases, the basis of practically all working drawing is orthographic projection. Thus to represent an object completely at least two views would be necessary, often more. The only general rule would be, *make as many views as are necessary to describe the object* **and no more.**

Instances may occur in which the third dimension is so well understood as to make one view sufficient, as for example in the drawing of a shaft or bolt. In other cases perhaps a half-dozen views might be required to show the piece completely. Some thought will be involved as to what views will show the object

to the best advantage; whether an auxiliary view or note will save one or more other views, or whether a section will better explain the construction than an exterior view. One statement may be made with the force of a rule—*If anything in clearness may be gained by the violation of any one of the strict principles of projection, violate it.*

There is no guide but the draftsman's judgment as to when added clearness might result by disregarding a theoretical principle, but numerous examples will be found in this chapter illustrating the application of the statement.

198. Classes of Working Drawings.—Working drawings may be divided into two general classes, assembly drawings and detail drawings.

199. Assembly Drawings.—An assembly drawing is, as its name implies, a drawing of the machine or structure put together, showing the relative positions of the different parts. The term "construction drawing" is sometimes used.

Under the term assembly drawings would be included preliminary design drawings and layouts, piping plans, unit assembly drawings, and final complete drawings used for assembling or erecting the machine or structure.

The *design drawing* is the preliminary layout, full size if possible, on which the scheming, inventing and designing is worked out accurately, after freehand sketches and calculations have determined the general ideas. From it the detail drawings of each piece are made.

The *assembly drawing* is in some cases made by tracing from the finished design drawing. Oftener it is drawn from the design drawing, perhaps to smaller scale to fit a standard sheet, and using the detail drawings to work from. This makes a valuable check on the correctness of the detail drawings and should be done before the details are sent out as finished. See Fig. 467.

The assembly drawing may give the over-all dimensions, the distances from center to center or from part to part of the different pieces, indicating their location and relation, so that the machine can be erected by reference to it. It should not be overloaded with detail, particularly invisible detail. Unnecessary hidden lines should not be used on any drawing.

Assembly drawings often have reference letters or numbers on the different parts. These "piece numbers" are sometimes

enclosed in circles with a leader pointing to the piece, and are used in connection with the details and bill of material.

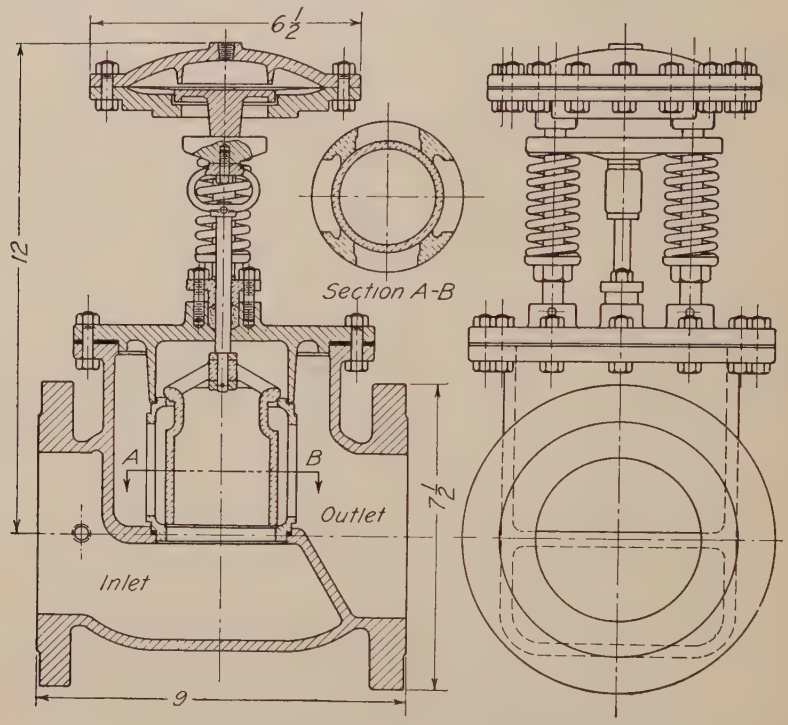

Fig. 467.—Assembly drawing (balanced valve).

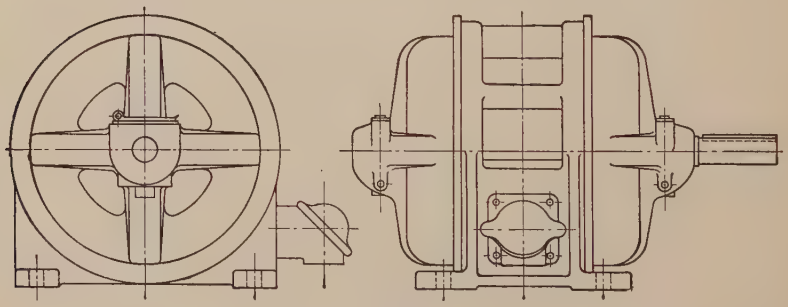

Fig. 468.—Outline assembly drawing (motor).

Diagram drawing is a term applied to the above class of assembly drawings, as well as to those made to show piping, wiring, heating, etc.

An outline assembly drawing is used to give a general idea of a machine or structure and contains only the principal dimensions. When made for catalogue or other illustrative purposes, dimensions are often omitted, Fig. 468. Shade lines are occasionally used on this class of drawings, and sometimes line shading. See Chapter XX.

An assembly working drawing, showing fully the construction of each piece as well as the relative positions, may be made for a simple machine.

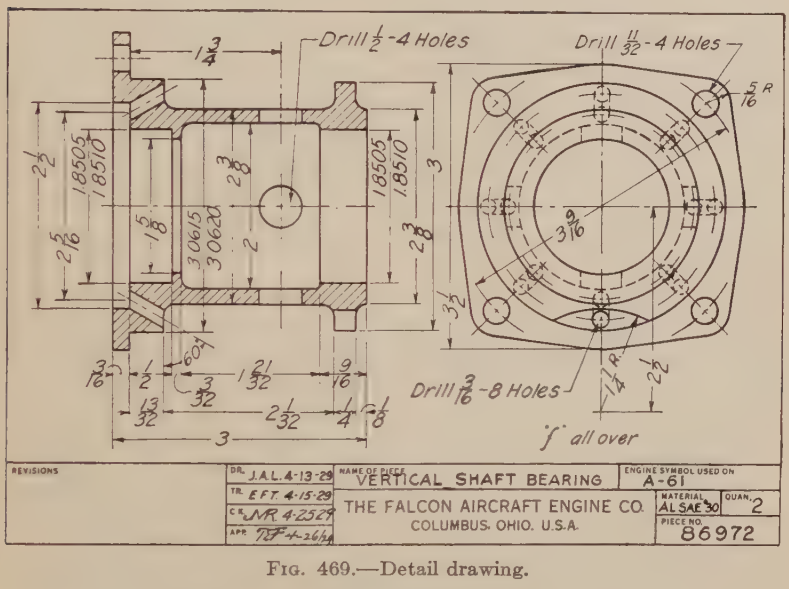

FIG. 469.—Detail drawing.

A unit assembly drawing is a drawing of a related group of parts, used instead of, or together with, separated details of each part, in more complicated machinery. Thus there would be a unit assembly of such parts as rear axle and differential gear train; of transmission gear box; of lathe head stock, etc.

200. Detail Drawings.—A detail drawing is the drawing of a separate piece, giving a complete and exact description of its form, dimensions and construction. A successful detail drawing will tell the workman *simply* and *directly* the shape, size, material and finish of each part, what shop operations are necessary, what limits of accuracy must be observed, and how many of each are wanted. Figure 469 is a detail drawing of a small piece, illustrating the use of decimal dimensions.

The *grouping* of the details is entirely dependent upon the requirements of the shop system. In a very simple machine and if only one or two are to be built (as for example in jig and tool work), all the details may perhaps be grouped on a single sheet. The detailed pieces should be in the same position as on the assembly, and, to facilitate reading, placed as nearly as possible in natural relationship. Often parts of the same material or character are grouped together, as forgings on one sheet, special bolts and screws on another.

In large production the accepted and best system is to have each piece, no matter how small, on a separate sheet.

201. Set of Drawings.—A complete *set* of working drawings therefore, consists of detail sheets and assembly sheets, the former giving all necessary information for the manufacture of each individual piece, while the latter shows the construction assembled as a finished unit or machine. The set may also include special drawings for the purchaser, such as foundation plans or oiling diagrams.

202. Style.—There is a *style* in drawing, just as there is in literature, which in one way indicates itself by the ease of reading. Some drawings "stand out," while others which may contain all the information are difficult to decipher. Although dealing with "mechanical thought," there is a place for some artistic sense in mechanical drawing. The number, selection and disposition of views, the omission of anything unnecessary, ambiguous, or misleading, the size and placing of dimension and lettering, and the contrast of lines are all elements concerned in the *style*.

203. Making a Working Drawing. Order of Penciling.—After the scheming, inventing and calculating has been done, the order of procedure would be:

First, lay off a sheet to standard size, with the excess paper to the right, as a convenient space for making sketches and calculations, and block out the space for the title.

Second, decide what scale is to be used, choosing one large enough to show all dimensions without crowding, and plan the arrangement of the sheet by making a little preliminary freehand sketch, estimating the space each view will occupy, and placing the views to the best advantage for preserving if possible a balance in the appearance of the sheet.

Third, draw the center lines for each view and on these "block in" the views by laying off the principal dimensions and outlines,

using light, sharp, accurate pencil lines. Center lines are drawn for the axes of symmetry of all symmetrical views or parts of views. Thus every cylindrical part would have a center line through its axis. Every circle would have two center lines intersecting at its center.

Fourth, finish the projections, putting in minor details, such as fillets, rounded corners, etc., last. The different views

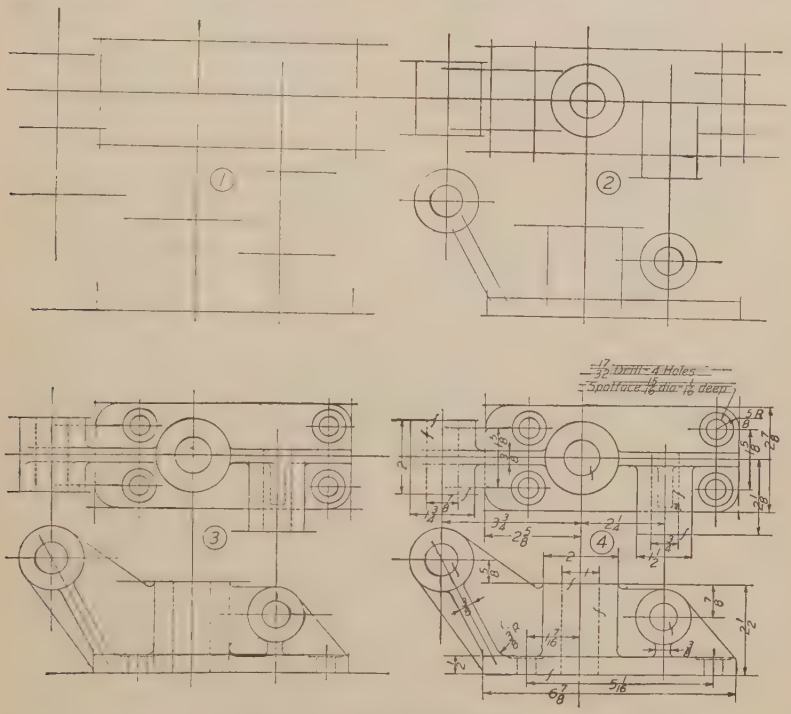

FIG. 470.—Order of penciling.

should be carried on together, projecting a characteristic shape as shown on one view to the other views, not finishing one view before starting another.

Fifth, draw all necessary dimension lines, then put in the dimensions.

Sixth, lay out the title.

Seventh, check the drawing carefully.

As an aid in tracing, the finished outline or parts of it may if necessary be brightened by running over a second time with the pencil. The overlapping and overextending lines of the con-

structive stage should not be erased before inking. These extensions are often convenient in showing the stopping points. All unnecessary erasing should be avoided as it abrades the surface of the paper so that it catches dirt more readily. If the construction lines have been made as lightly as they should be, no "clean up" erasing is necessary.

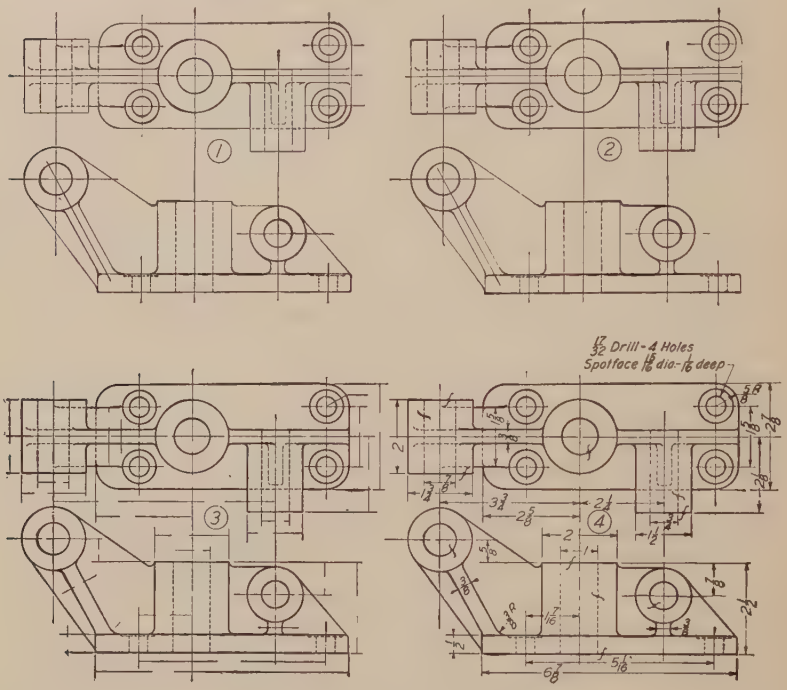

Fig. 471.—Order of inking.

As an aid in stopping tangent arcs in inking it is desirable to mark the tangent point on the pencil drawing by a short piece of the normal at the point of tangency. Figure 470 illustrates the stages of penciling.

204. Tracing.—Working drawings almost always go to the shop in the form of blue prints, generally printed from tracings made on tracing cloth, although often drawings are made on bond paper or other translucent paper and prints made directly from the pencil drawing. The beginner should read carefully pages 395 and 396 before starting a tracing, noticing that the cloth is to be tacked down smoothly with the dull side up, prepared by

chalking, and the selvage torn off. Also that no view should be left over night with only part of its lines traced.

205. Order of Inking.—*First,* ink all solid circles, beginning with the smallest, then circle arcs.

Second, ink dotted circles and arcs.

Third, ink any irregular curved lines.

Fourth, ink straight full lines in the order: horizontal, vertical, inclined.

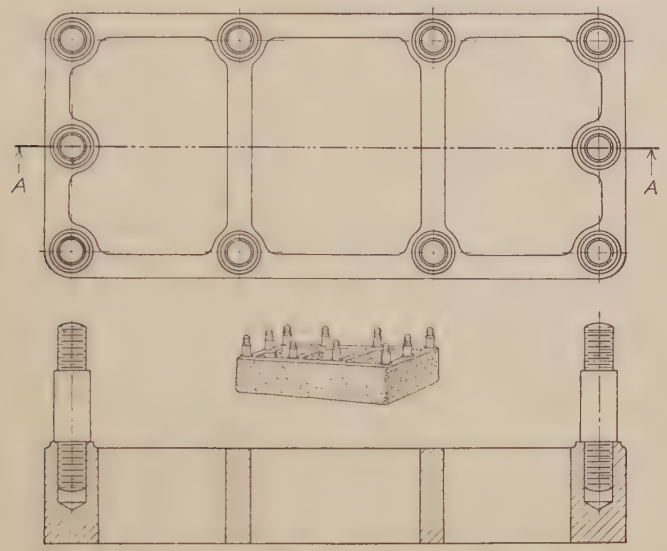

Fig. 472.—Omission of detail beyond section (spacer block).

Fifth, ink straight dotted lines in the same order.

Sixth, ink center lines.

Seventh, ink extension and dimension lines

Eighth, ink arrow-heads and dimensions.

Ninth, section-line all cut surfaces.

Tenth, letter notes and title.

Eleventh, ink the border.

Twelfth, check the tracing.

Figure 471 shows the stages of inking.

206. Sections.—Sectional views are used in working drawings whenever the interior construction can be shown to better advantage than in an exterior view. The subject of sectional views was explained on page 98, and should be reread, noting the five principles: (1) That the cutting plane need not be continuous, (2)

that shafts etc., are not sectioned, (3) that invisible lines beyond the cutting plane are not usually drawn, (4) that adjacent pieces are section-lined in opposite directions, (5) that the same piece is always section-lined the same way. The use of revolved sections, broken-out sections and detail sections should also be noted.

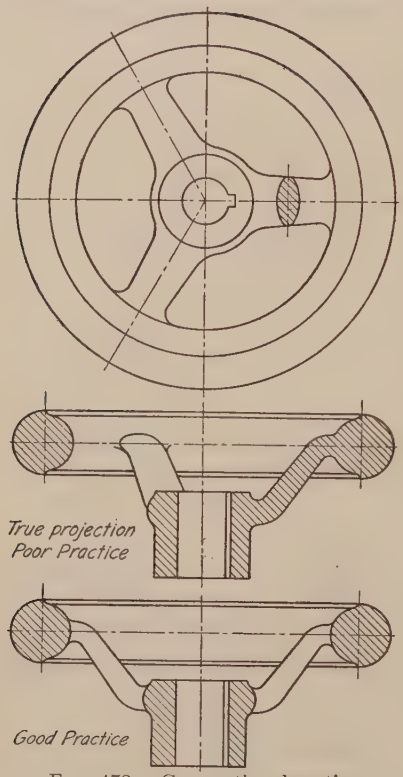

FIG. 473.—Conventional section.

The usual rules of projection are generally followed in making sectional views. Confusion in reading a complicated piece may occur if all the detail behind the cutting plane is drawn. To insure clearness such detail not required in explaining the object may be omitted, Fig. 472.

207. Violations of Theory. The statement was made that in the interest of clearness the strict principles of projection might be violated. This is often done in making sectional views, as in Fig. 473.

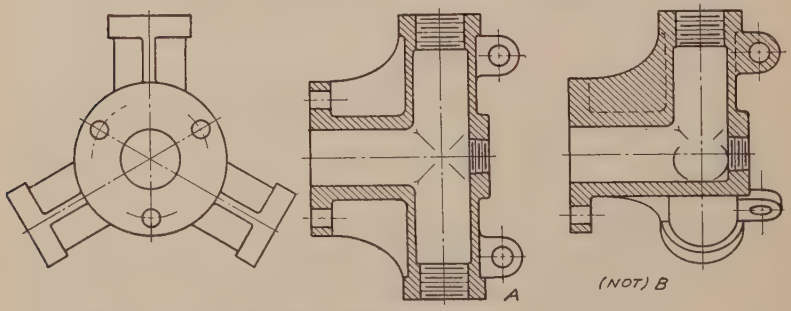

FIG. 474.—Symmetrical section.

The true projection of a section of the handwheel is unsymmetrical and misleading, therefore not good practical drawing. The preferred form is shown in the lower view.

Another example in which a true section gives an unsymmetrical appearance to a symmetrical piece is shown in Fig. 474. In such cases the section is revolved or "aligned" to preserve the effect of symmetry.

208. Ribs in Section.—When the rib of a machine part lies in a sectional plane, if a true section be drawn the effect is heavy and misleading. The draftsmen's usual method is to omit the section lines from the rib, as if the cutting plane were just in front of it, Fig. 475. Another method sometimes used to good advantage, is to omit alternate section lines on the rib as

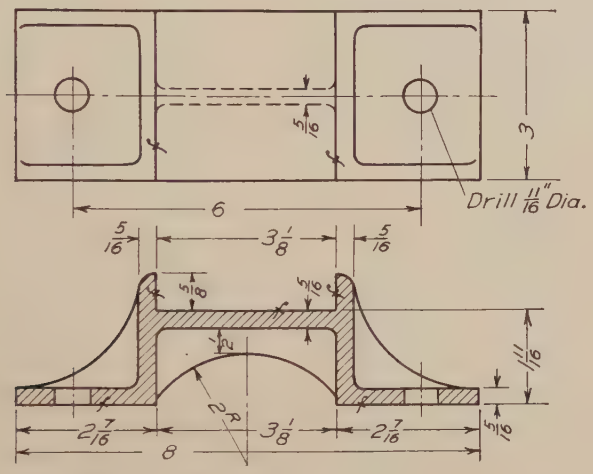

Fig. 475.—Treatment of section through rib.

in the lower section of Fig. 476. It should be noted that the actual section is here taken through the rib, therefore the contour is dotted. The upper section shows the usual method, but in this case the view is the same as if there were no rib. The special representation of the lower view is designed to overcome this difficulty.

Drilled flanges in elevation or section should always show the holes at their true distance from the center, whether or not they come in the plane of the section. In Fig. 477 the true projections are evidently confusing. When the holes do not fall in the plane of the section they should be shown as if revolved into it, and may be indicated either by full or dotted lines as shown in the two lower views.

209. Full View Violations.—These departures from true projection occur in full views as well as in sections. For example, if a front view shows a hexagonal bolt head "across corners," the theoretical projection of the side view would be "across flats." In a working drawing when bolt heads occur they should be drawn across corners in both views, to show the space needed.

Some typical examples in which true lines and curves of intersection are of no value as aids in reading the drawing and are therefore ignored, are shown in Fig. 478.

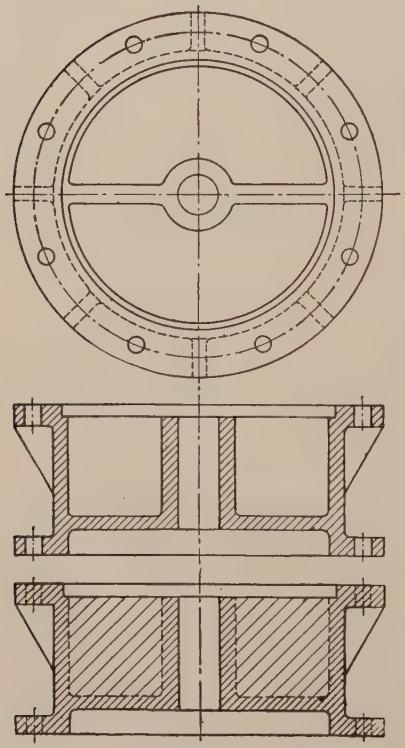

Fig. 476.—Method of identifying rib in section.

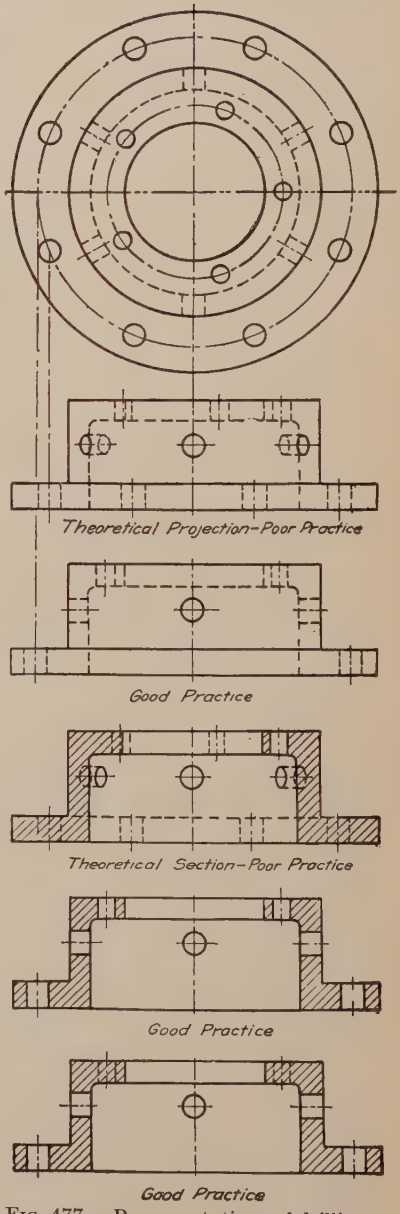

Fig. 477.—Representations of drilling.

Pieces which have parts at an angle with each other such as the lever of Fig. 479 may have their alignment straightened out in one view, as shown. Similarly, bent pieces of the type of Fig. 480 should have one view made as a developed view.

Lugs or parts cast on for holding purposes, and to be machined off are often shown in phantom, in dashed lines. If in section

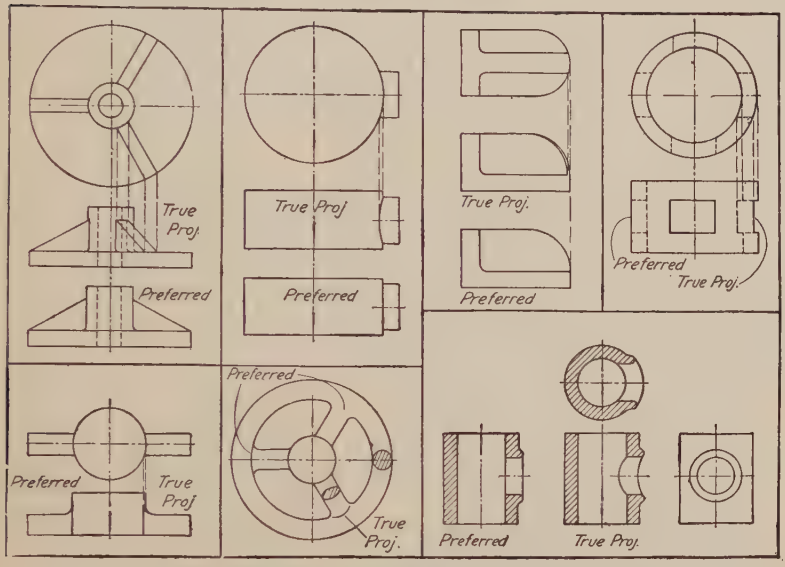

FIG. 478.—Suggested treatment of curves of intersection.

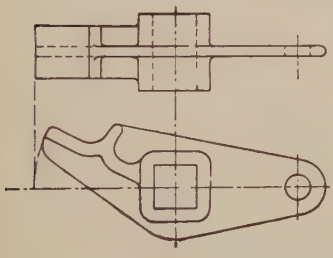

FIG. 479.—Revolved view.

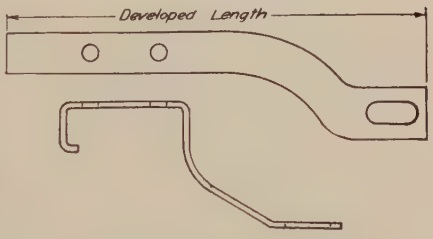

FIG. 480.—Developed view.

the section lines are dotted. Dashed lines are also used for indicating the limiting positions of moving parts, Fig. 39, and for showing adjacent parts which aid in locating the position or use of the piece.

210. Fillets and Rounds.—In designing a casting a sharp internal angle must never be left, on account of the liability to

fracture at that point. The radius of the fillet depends on the thickness of the metal and other design conditions. When not dimensioned it is left to the pattern maker. External angles may be rounded for appearance or comfort, in radii ranging from merely removing the sharp edge, to that of nearly the thickness of the piece. An edge made by the intersection of two unfinished surfaces of a casting should always be "broken" by a very small round. A sharp corner on a drawing thus indicates that one or both of the intersecting surfaces must be a finished surface. These minute rounds as well as other small fillets and "run-outs" are best put in freehand both in pencil and ink. Some methods

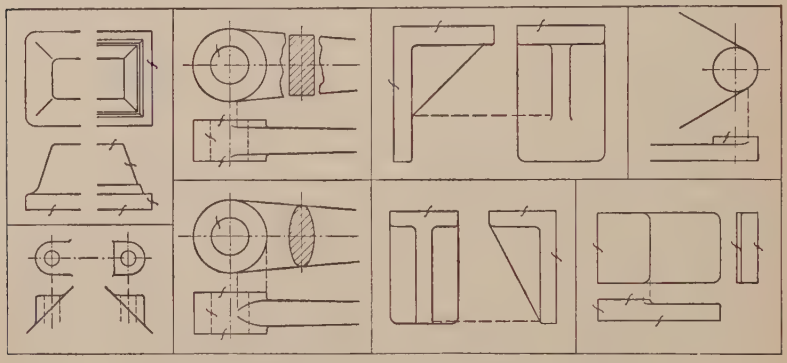

Fig. 481.—Suggested treatment of fillets and rounds.

of representation of fillets and rounds, with the run-outs of arms and brackets intersecting other surfaces are shown in Fig. 481.

211. Conventional Symbols.—The various methods of indicating screw threads, springs, etc., described in the previous chapter were called "conventional representation" as they did not represent the real outlines of the objects. Other conventions are used by draftsmen for electrical apparatus, materials, etc.

In specifying the materials of which objects are to be made the safest rule to follow is to add the name of the material as a note. There are cases however in which when the piece is shown in section, adjacent parts made of different materials can be indicated to good advantage by using different characters of crosshatching.

The commonest example of this is in distinguishing a bearing or lining metal such as babbitt metal, poured into place hot. It is a universal practice to indicate such metals by the conven-

tional symbol of crossed lines, as shown in Fig. 505. The quickest way to make this symbol is to section over both the lining metal and the adjacent cast iron at once, then cross the lining metal in the other direction.

The symbol of two crossed diagonals is used for two distinct purposes, to indicate on a shaft the position or finish for a bearing, and to indicate that a certain surface (usually parallel to the picture plane) is flat, but these two uses are not apt to be confused.

Sheet metal, and structural shapes to small scale, in section, may be shown most effectively in solid black with white spaces between parts.

Electrical symbols, radio symbols and symbols for colors are given in the Appendix.

212. Codes for Materials.—On page 448 will be found the tentative American Standard symbols for indicating various materials of construction in section and elevation. Symbolical

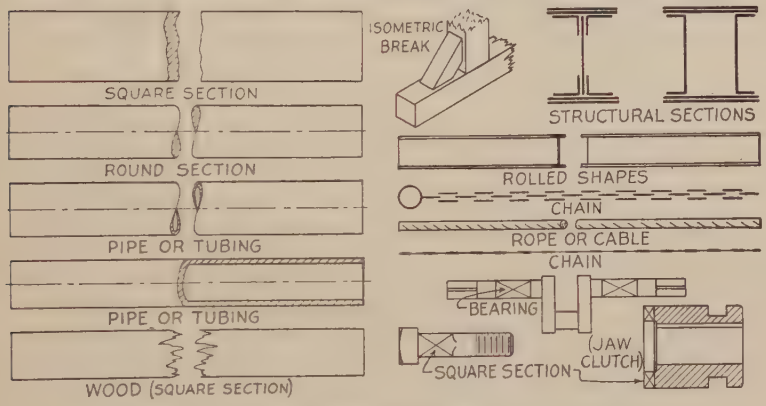

Fig. 482.—Conventional breaks and other symbols.

section lining is not in common use on ordinary working drawings, but sometimes it is desired to call attention on a drawing to a distinction between materials, and a recognized standard code is of obvious advantage. Code section lining is used only as an aid in reading a drawing and is not to be taken as the official specification of the material. This should be stated on the drawing in words.

213. Conventional Breaks.—In making a detail of a long bar or piece, with uniform shape of section, perhaps with detail at each end there is evidently no necessity for drawing its whole

length. It may be shown to larger scale and thus better by breaking out a piece, moving the ends together and giving the true length by the dimension, as in Fig. 555. The characteristic shape of the cross-section is indicated by the break, as in Fig. 482.

214. Gears.—The theory of gearing belongs in the study of Mechanism, but the representation and specification of gears is of such common occurrence that the proportions and nomenclature should be familiar to the young engineer.

Briefly, gears are a substitute for rolling cylinders and cones, designed to insure positive motion. There are numerous kinds of gears, of which the most common forms are *spur gears*, for transmitting motion from one shaft to another parallel shaft, and *bevel gears* for two shafts whose axes intersect, usually at right angles. When one of a pair of gears is much smaller than the other it is called a pinion.

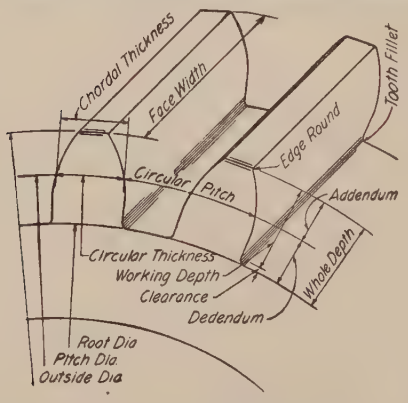

FIG. 483.—Nomenclature.

Some of the terms in the standard nomenclature of gearing (revised 1929) are given in Fig. 483. In the calculation of gears the following standardized terms and abbreviations are used.

N = Number of Teeth = $DP \times PD$

DP = Diametral Pitch = number of teeth in the gear for each inch of pitch diameter = $\dfrac{N}{PD}$

PD = Diameter of Pitch Circle = $\dfrac{N}{DP}$

CP = Circular Pitch = the distance on the circumference of the pitch circle between corresponding points of adjacent teeth = $\dfrac{\pi PD}{N}$ = $\dfrac{\pi}{DP}$

CTh = Circular Thickness = the thickness of the tooth on the pitch circle = $\dfrac{CP}{2}$

CT = Chordal Thickness = length of the chord subtended by the circular thickness arc = $PD \sin \dfrac{90}{N}$

A = Addendum = radial distance between the pitch circle and the top of the teeth = $\frac{\text{constant}}{DP}$ $\left(= \text{for standard involute teeth } \frac{1}{DP}\right)$.

D = Dedendum = radial distance between the pitch circle and the bottom of the tooth space = $\frac{\text{constant}}{DP}$ $\left(= \text{for standard involute teeth } \frac{1.157}{DP}\right)$.

C = Clearance = radial distance between the top of a tooth and the bottom of the mating tooth space = $\frac{\text{constant}}{DP}$ $\left(= \text{for standard involute teeth } \frac{.157}{DP}\right)$.

WD = Whole Depth = radial distance between outside circle and root circle = $A + D$.

WDe = Working Depth = greatest depth to which a tooth of one gear extends into the tooth space of a mating gear = $2A$.

OD = Outside Diameter = the diameter of the greatest circle which contains the tops of the teeth = $2A + PD$.

RD = Root Diameter = the diameter of the root circle = $PD - 2D$.

FW = Face Width = width of pitch surface.

ER = Edge Round = radius of the circumferential edge of a gear tooth (to break the corner).

TFi = Tooth Fillet = curved line joining the tooth flank and the bottom of the tooth space.

The necessary information concerning a gear may be found by counting the number of teeth and measuring the outside diameter.

Example. Given N and OD to find DP

$$\frac{N}{DP} + \frac{2}{DP} = OD \quad \text{Then } DP = \frac{N+2}{OD}$$

In a similar way any required dimensions may be found by the solution of an equation.

In the working drawings of gears and toothed wheels the teeth are not all drawn. For cast gears the pitch circle, outside circle and root circle are drawn, and the full-sized outline of one tooth. For cut gears the blank is drawn and a note added concerning the number of teeth and pitch.

215. To Draw a Spur Gear.—Fig. 484. To draw the teeth of a standard involute tooth spur gear by an approximate circle arc method, lay off the pitch circle, root circle and outside circle. Start with the pitch point and divide the pitch circle into distances equal to the circular thickness. Through the pitch point draw a line at $75\frac{1}{2}°$ with the center line (for convenience the draftsman uses 75°). Draw the base circle tangent

to the 75° line. With compasses set to a radius equal to one-fourth the radius of the pitch circle describe arcs through the division points on the pitch circle, keeping the needle point on the base circle. Brighten the arcs for the tops of the teeth

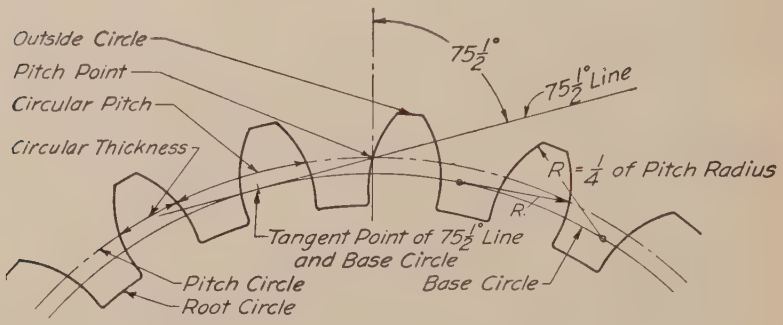

Fig. 484.—To draw involute spur gear, approximate method.

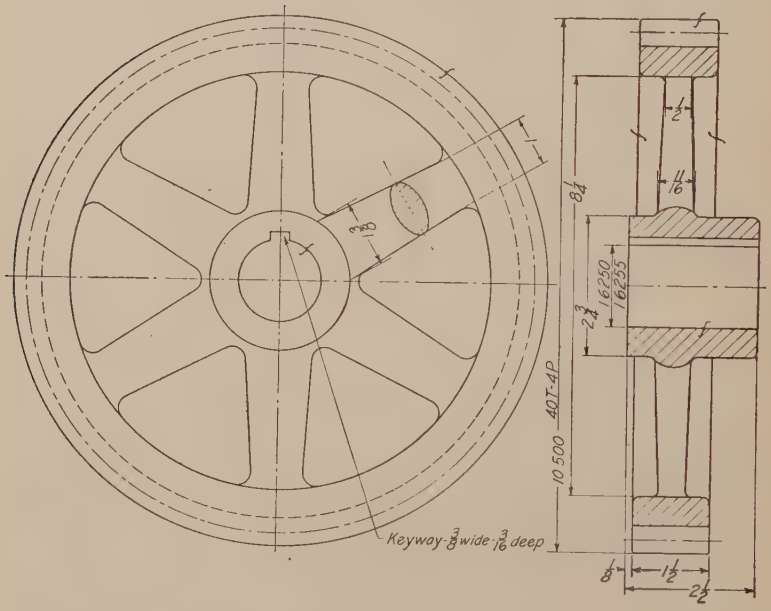

Fig. 485.—Spur gear.

and bottoms of the spaces, and add the tooth fillets. For 16 or fewer teeth the radius value of one-fourth the pitch radius must be increased to suit in order to avoid the appearance of excessive undercut. For stub teeth the 75½° line is changed to 70°.

This method of drawing gear teeth is useful on display drawings. On working drawings the teeth are not drawn but are indicated as in Fig. 485.

216. To Draw a Rack.—Fig. 486. To draw the teeth of a standard involute rack by an approximate method, draw the pitch line and lay off the addendum and dedendum distances. Divide the pitch line into spaces equal to the circular thickness. Through these points of division draw the tooth faces at $14\frac{1}{2}°$ (15° is used by draftsmen). Draw tops and bottoms and add the tooth fillets. For stub teeth use 20° instead of $14\frac{1}{2}°$.

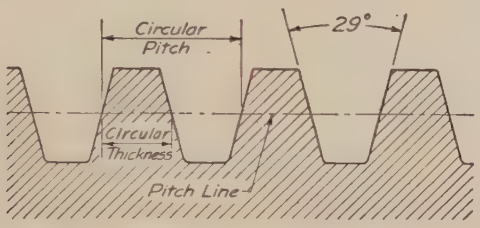

Fig. 486.—Involute rack.

217. To Draw a Bevel Gear.—Fig. 487. To draw the teeth of a standard involute tooth bevel gear by an approximate method (the Tredgold method). Draw the center lines, intersecting at O. Across the center lines lay off the pitch diameters $\left(\frac{N}{DP}\right)$ and project them parallel to the center lines until the projectors intersect at the pitch point P. From the pitch point draw the pitch circle diameters for each gear and from their extremities the "pitch cones" to the vertex or "cone center" O. Lay off the addendum and dedendum distances for each gear on lines through the pitch points perpendicular to the cone elements. Extend one of these normals for each gear to intersect the axis, as at B and C, making the "back cones." With B as center swing arcs 1, 2, and 3 for the top, pitch line and bottom of a developed tooth. On a radial center line AB draw a tooth, by the method of Fig. 484. Start the plan view of the gear by projecting points 1, 2 and 3 across to its vertical center line and drawing circles through the points. Lay off the radial center lines for each tooth. With dividers take the circular thickness distances from A and transfer them to each tooth center line. This will give three points on each side of each tooth through

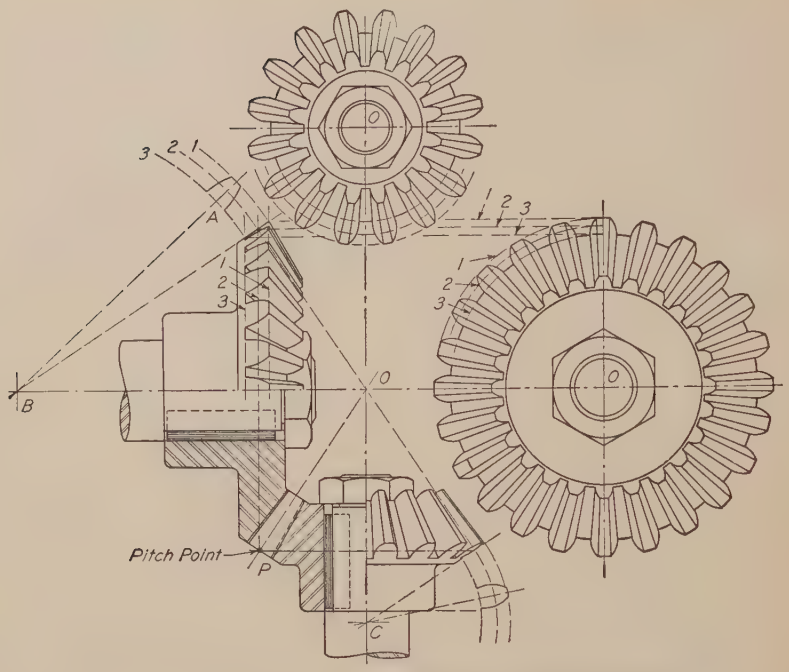

FIG. 487.—To draw involute bevel gears, approximate method.

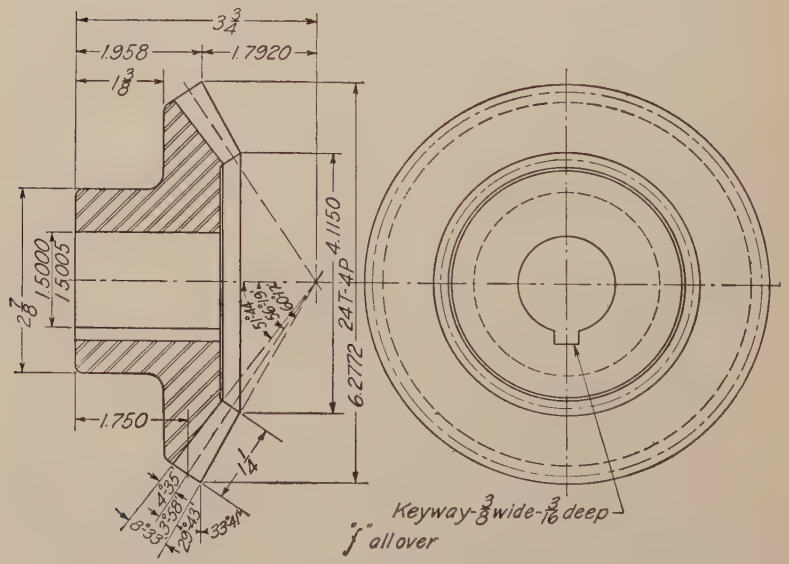

FIG. 488.—Bevel gear.

which a circle arc, found by trial, will pass, giving the foreshortened contour of the large end of the teeth in this view. From this point the drawing becomes a problem in projection drawing. Note that in every view the lines converge at the cone center O, and that by finding three points on the contour of each tooth, circle arcs can be found by trial which will be sufficiently close approximations to give the desired effect.

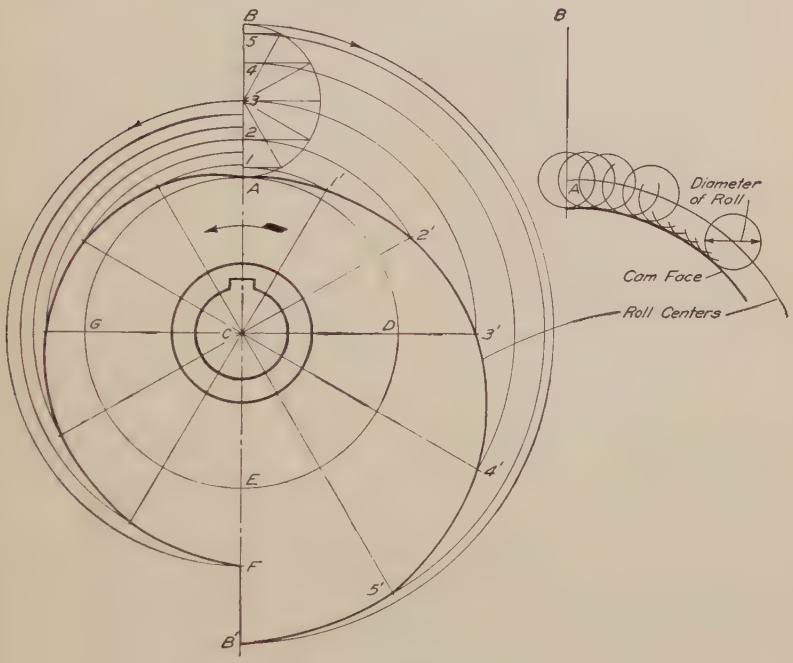

Fig. 489.—Plate cam.

This method is used for finished display drawings. For working drawings bevel gears are drawn without tooth outlines, as shown in Fig. 488.

218. Cams.—A cam is a machine element used to obtain an irregular or special motion not easily obtained by other means. The shape of a cam is derived from the motion required of it and may take the form of a circle, ellipse, involute, etc., or may be an irregular curve. One form of plate cam is shown in Fig. 489. A cylindrical cam is shown in Fig. 490. The principle involved in drawing a cam is the same in all cases.

Let it be required to move a machine part up and down with a specified motion. The part moved may be a roller, in which case the center of the roller is considered as a moving point. A plate attached to a revolving shaft may be given such a shape that it will cause the roller to rise and allow it to fall in a predetermined manner.

To find the cam outline, Fig. 489. Given point C the center of the shaft, point A the lowest position and point B the highest position of the center of the roller. It is required to raise the follower with harmonic motion during one-half revolution of the uniformly revolving shaft, allow it to drop one-half way down instantly and then drop the remaining distance with uniform motion.

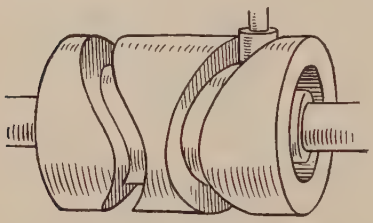

Fig. 490.—Cylindrical cam.

Divide the rise into parts proportional to harmonic motion. Divide the semicircle ADE into as many equal parts as there are spaces in the rise, and draw radial lines. With C as a center and radius $C1$ draw an arc intersecting the first radial line at $1'$. In the same way locate points $2'$, $3'$, etc., and draw a smooth curve through them. If the cam is revolved in the direction of the arrow, it will raise the follower with the desired motion.

Draw $B'F$ equal to one-half AB. Divide $A3$ into six equal parts and EGA into six equal parts. Then for equal angles the follower must fall equal distances. Circle arcs drawn as indicated will locate the required points on the cam outline.

This outline is for the center of the roller, allowance for which may be made by drawing the roller in its successive positions and then drawing a tangent curve as shown in the auxiliary figure.

219. Checking.—Before being sent to the shop a working drawing is carefully checked for errors and omissions. A first check of the pencil drawing is made by the chief designer, who knows the price at which the machine is to be made, and checks the design and its mechanism for soundness and economy, sees if existing patterns for any parts can be used, checks for adequate lubrication, for correct representation and other points in the list following.

When the drawing is finished it is gone over by an experienced checker, who in signing his name to it becomes responsible for any

inaccuracy. This is the final "proof reading" and cannot be done by the one who has made the drawing nearly as well as by another person. In small offices all the work is checked by the chief draftsman, and draftsmen sometimes check each other's work; in large drafting rooms one or more checkers who devote all their time to this kind of work are employed. All notes, computations and checking layouts should be preserved for future reference.

Students may gain experience in this work by being assigned to check other students' work.

To be effective, checking must be done in an absolutely systematic way and with thorough concentration.

220. To check a drawing each of the following items[1] should be gone through separately, allowing nothing to distract the attention from it. As each dimension or feature is verified a check mark should be placed above it, and corrections indicated with soft or colored pencil.

1. Put yourself in the position of those who are to read the drawing and find out if it is easy to read and tells a straight story. Always do this before checking any individual features; in other words, before you have had time to become accustomed to the contents.

2. See that each piece is correctly designed and illustrated, and that all necessary views are shown, but none that are not necessary.

3. Check all the dimensions by scaling, and, where advisable, by calculation also. Preserve the calculations.

4. See that dimensions for the shop are given as required by the shop, and that the shop is not left to do any adding or subtracting in order to get a needed dimension.

5. Check for tolerances. See that they are neither too "fine" nor too "coarse" for the particular conditions of the machine, so as neither to increase unnecessarily the cost of production nor on the other hand to impair accuracy of operation or duplication.

6. Go over each piece and see that finishes are properly specified.

7. See that every specification of material is correct and that all necessary ones are given.

8. Look out for "interferences." This means check each detail with the parts that will be adjacent to it in the assembled machine and see that proper clearances have been allowed.

[1] Adapted from Follows' "Dictionary of Mechanical Drawing."

9. When checking for clearances in connection with a mechanical movement, lay out the movement to scale, figure the principal angles of motion and see that proper clearances are maintained in all positions, drawing small mechanisms to double size or larger.

10. See that all the small details: screws, bolts, pins, keys, rivets, etc., are standard and that, where possible, stock sizes have been used.

11. Check every feature of the title or record strip, and bill of material.

12. Review the drawing in its entirety, adding any explanatory notes as will increase its efficiency.

221. The Bill of Material.—A bill of material is a tabulated statement placed on a separate sheet, as is always done in quantity production, or in some cases on the drawing, as illustrated in Fig. 546, which gives the piece number, drawing size, name, quantity wanted, size, material, stock size of raw material, and sometimes the weight of each piece. A final column is usually left for remarks.

222. Title.—The title of a working drawing is usually boxed in the lower right-hand corner, the size of the space varying with the size of the drawing. For $12'' \times 18''$ sheets the space reserved may be about three inches long; for $18'' \times 24''$ sheets four or four and a half, and for $24'' \times 36''$ sheets five or five and a half inches.

Contents of Title.—In general the title of a machine drawing should contain:

1. Name of machine.
2. General name of parts (or simply "details").
3. Name of purchaser, if special machine.
4. Manufacturer (company or firm name and address).
5. Date (usually date of completion of tracing).
6. Scale or scales; required on assembly drawings, sometimes omitted from fully dimensioned detail drawings.
7. Drafting room record: names or initials of draftsman, tracer, checker, approval of chief draftsman, or other authority, each with date; and space for record of changes and revisions.
8. Numbers; of drawing, of the order if special design. The filling number (which in detail drawings should be the same as the piece number) is often repeated in the upper left-hand corner upside down for convenience in case the drawing should be reversed in the drawer.

Form of Title.—Every drafting room has its own standard form for titles. In large offices the blank form is often printed in type on the tracing paper or cloth. Figures 491 and 492 are characteristic examples. A typical form is shown in Fig. 546.

FIRST USED ON	ALLOWABLE VARIATION ON DIMENSIONS LOCATING FINISHED SURFACES IS PLUS OR MINUS .005 UNLESS OTHERWISE SPECIFIED.		
MATERIAL	THE DOMESTIC ENGINEERING COMPANY		
MAT. SPEC.	DAYTON - DELCO - LIGHT - OHIO		
HEAT TREAT	DATE		SCALE
HARDNESS	DRAWN BY	APPROVED	
FINISH	TRACED BY		NO.

Fig. 491.—A printed title.

A form of title which is used to considerable extent is the *record strip*, a strip marked off entirely across the lower part of the sheet, containing the information required in the title, and space

HARRISON COUPLER CO.			
ELECTRICAL DEPT.			PHILADELPHIA
PATTERN NO	MATERIAL	EST. WEIGHT	SUPERSEDES DWG.
TITLE			
ELECTRICAL ENGINEER		SUPT ELECTRICAL DEPARTMENT	
DRAWN BY / DATE	TRACED BY / DATE		
	CHECKED BY	NO.	

Fig. 492.—A title form.

for the record of orders, revisions, changes, etc., which should be noted, with date, as they occur. Figure 493 illustrates one form.

It is sometimes desired to keep the records of orders and other private information on the tracing but not have them

UNIT		NAME OF PIECE		QUANT.	USE CASTING DROP FORGING
DR.	DATE	SYMBOL OF MACHINE USED ON	SUPERSEDES DRAWING	MAT.	PIECE No.
TR.					
CH.		THE LODGE & SHIPLEY MACHINE TOOL CO. CINCINNATI, OHIO, U. S. A.	SUPERSEDED BY DWG.		
FORM 525					

Fig. 493.—A record strip title.

appear on the print. In such cases a record strip is put outside the border and trimmed off the print before sending it out.

To Draw a Title.—The title should be lettered freehand in single-stroke capitals either vertical or inclined but not

both styles in the same title. Write out the contents on a separate piece of paper, then refer back to page 46 where full instructions have been given.

223. Commercial Practice.—In commercial drafting *accuracy* and *speed* are the two requirements. The drafting room is an

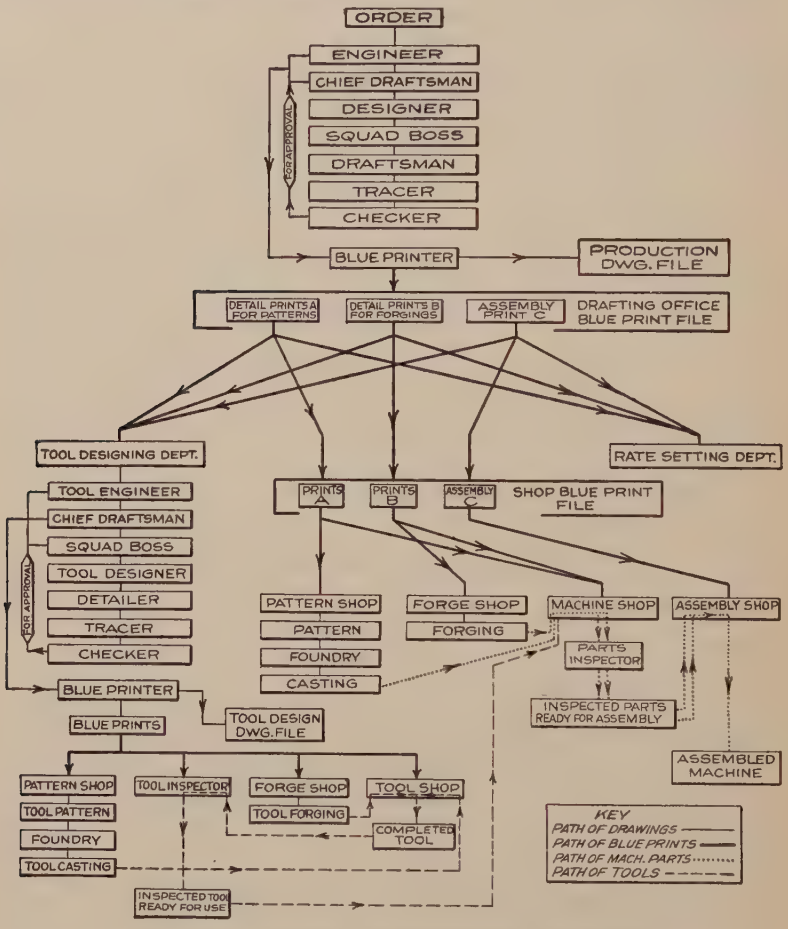

FIG. 494.—Development and distribution of drawings.

expensive department and time is an important element. The draftsman must therefore have a ready knowledge not only of the principles of drawing but of the conventional methods and abbreviations, and any device or system that will save time without sacrificing clearness is desirable.

The usual criticism of the student by the employer is his lack of appreciation of the necessity of *speed.*

224. The Drawings and the Shop.—The relation of drawings and blue prints to the operations of production is illustrated in the graphical chart, Fig. 494, which shows in diagrammatic form the different steps in the development of the drawings, and their distribution and use in connection with the shop operations, from the time the order is received until the finished machine is delivered to the shipping room.

The following outline description of the various shop operations illustrated in the chart should be supplemented by first-hand study as opportunity permits.

On leaving the blue printer the original drawings are filed and the sets of prints delivered to the blue-print files to be distributed as indicated.

Pattern Shop.—Details for all castings are sent to the pattern-maker, who makes a pattern for each in wood. From this if a large quantity of castings is required a metal pattern, often in "white metal" is made. The pattern-maker provides for the shrinkage of the casting by making the pattern oversize, using a "shrink rule" for his measurements, and allows extra metal for machining the finished surfaces. He also provides the "draft" or slight taper (not shown on the drawings) so that the pattern will come out of the sand. See paragraph 154.

The pattern-maker's first interest in studying the drawing is to see how the pattern can be best made so as to be molded most economically and efficiently, and whether a "solid," "two-part" or "three-part" pattern is necessary in order to withdraw it from the sand. He also makes the "core-boxes" for the sand cores that form the hollow parts of the piece.

Foundry.—The patterns and core-boxes are sent to the foundry and the castings made. Only in occasional instances does the foundryman call for assistance from the drawing.

Forge Shop.—Detail prints for the pieces specified to be made of wrought metal or forged steel are sent to the forge shop and either hand forged or "drop forged," with allowance of metal for finish. See paragraph 155.

Tool Designing Department.—Larger concerns maintain a tool designing department whose function is to design the jigs, fixtures, tools and special machine tools necessary for the economical manufacture of the finished parts; and in some lines, as bearings

and machine tools, this service is extended to their customers. This department has much the same organization as the engineering department proper, of which it is a part. Prints of the proposed product are sent to this department, where the drawings for the required tools are prepared, usually printed from pencil drawings on bond paper. From these drawings the tools are made as shown in the chart, either in the tool shop or, as in some organizations, outside.

Machine Shop.—The rough castings and forgings come to the machine shop to be finished according to the drawing specifications. The special tools, jigs and fixtures made for the machine parts by the tool designing department are held in the tool room ready for the machine shop. Flat surfaces will be machined on a milling machine, planer or shaper; parts with round section on a lathe; slots, keyways, etc., on a shaper, or on a milling machine, which is used for a variety of work. Holes are drilled, reamed, counterbored on a drill press; holes bored on a boring machine or lathe. In quantity production many special machine tools and automatic machines are in use. For exact work, grinding machines with wheels of abrasive material are used, and grinders are coming into greatly increased use for operations formerly made with cutting tools.

Inspection Department.—Careful inspection is an important feature of modern production. Good practice requires inspection after each operation. The term "preventive inspection" is used as meaning the inspection of the first piece of each set-up before the operator is allowed to proceed.

Assembly Shop.—After inspection all the finished parts are assembled or put together with the aid of the assembly drawings.

225. Arc Welding.—A new process of manufacturing machine parts which have heretofore been made as castings is gaining rapid acceptance in many fields. This process consists of building up these parts, such as machinery bases, pedestals, columns, etc., from standard steel shapes and plates, joining them by electric arc welding.

Since steel is six times as strong in tension as cast iron and two and one-half times as stiff, it is apparent that by using steel it is possible to secure greater strength and rigidity with less weight of metal. Designing for arc welded steel construction requires ingenuity but is in reality simpler than designing com-

plicated cast parts. The strength and weight of rolled steel shapes are standard and the computations for sizes of members are therefore greatly simplified.

As to the strength of the arc welded connections, it is possible to make a welded joint as strong as the members joined.

Drawings for arc welded steel construction are usually simpler than for riveted or cast construction. Continuous welds are not

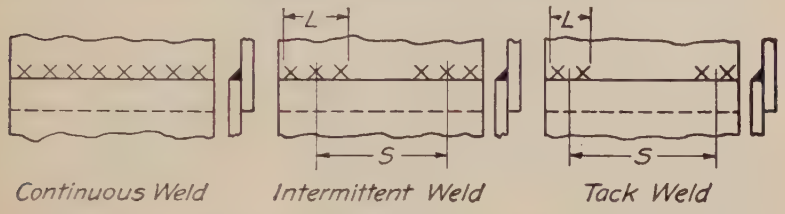

Fig. 495.—Symbols for arc welding.

usually detailed but are indicated by words describing the size of the welded bead ($\frac{1}{4}''$ bead, $\frac{3}{8}''$ bead, etc.). Intermittent welds are usually marked "tack weld" (2″ long, 4″ long etc.). Welding symbols are shown in Fig. 495.

226. Chemical Drawing.—The study of drawing in preparation for chemical engineering involves all the basic principles considered in this and previous chapters. The chemical engineer

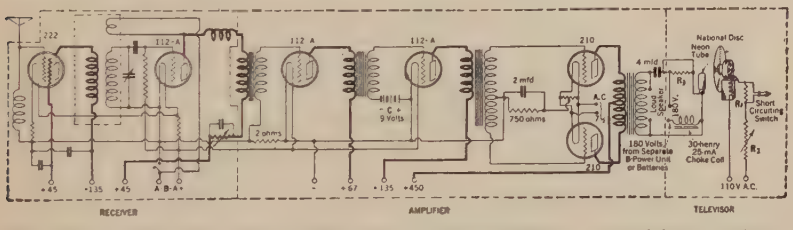

Fig. 496.—Schematic wiring diagram of James Millen's television receiver. (*Courtesy of "Radio Broadcast."*)

should be informed on piping and on the various forms of equipment used in industrial chemistry such as mixing, grinding, filtering, drying and conveying machinery. Problems of special interest to chemical engineers are Group IV in Chapter XI, and in this chapter problem 16 and problems 57 to 65.

227. Electrical Drawing.—Electrical engineers need the same basic equipment in the language of drawing as do mechanical or other engineers. In its application in their profession it may be divided into two general classes, working drawings, as of

electrical machinery, and diagrammatic or symbolic drawings, such as wiring diagrams etc.

In electrical working drawings the principles and conventions of this chapter are all applicable. Figure 468 is an example, the outline assembly drawing of a motor. Figure 569 is an example of an erection working drawing.

Diagrammatic drawings, using conventional symbols for electrical connections and equipment, form an important class of electrical drawings. Electrical symbols, wiring symbols and radio symbols are given on pages 446 and 447. An example of a diagrammatic drawing is shown in Fig. 496. A group of problems on electrical drawing, including electrical equipment, substations, switchboards, motors, wiring and radio are included in problems 92 to 121.

PROBLEMS

228. The first part of any working drawing problem consists of the selection of views, the choice of suitable scales and the arrangement of the sheet. In class work a preliminary sketch layout should be submitted for approval before the drawing is commenced.

The problems following are designed to cover the points outlined in the text and their division into groups will suggest a selection of one or more from each group in making up a course. They may be drawn on 12″ × 18″ or 18″ × 24″ sheets.

In dimensioning these problems the principles given in Chapter X should be followed carefully. On account of restricted space the illustrations for the problems are often crowded. Do not follow them as examples of good placing of dimensions.

Group I. Exterior Detail Drawings

Problems 1 to 7. Figs. 497 to 503. Make complete working drawings fully dimensioned and with necessary notes, from which the pattern could be made and the piece finished in the shop.

Group II. Detail Drawings in Section

8. Fig. 504. Working drawing of flange coupling; size to be assigned.

9. Fig. 505. Working drawing of pillow block; size to be assigned.

10. Fig. 506. Working drawing of eccentric and strap; size to be assigned.

11. Fig. 507. Working drawing of flywheel. Outside diameter 60″, hub 6″, bore 3″, keyway ¾″ × ⅜″. Arms at rim three-fourth size at hub.

12. Fig. 508. Working drawing of pulley. Figure dimensions from formulas given. Suggested sizes (*a*) 24″ diam., 6″ face, 2″ bore; (*b*) 42″ diam., 14″ face, 3 1/16″ bore; (*c*) 20″ diam., 10″ face, 2 3/16″ bore; (*d*) 12″

diam., 16″ face, $2\frac{7}{16}$″ bore; (*e*) 60″ diam., 8″ face, $3\frac{15}{16}$″ bore; (*f*) 60″ diam., 4″ face, $1\frac{7}{16}$″ bore.

13. Fig. 509. Working drawing of swivel bracket guard.

14. Fig. 510. Working drawing of draw-in chuck collet. Note that the section is aligned as explained in paragraph 207.

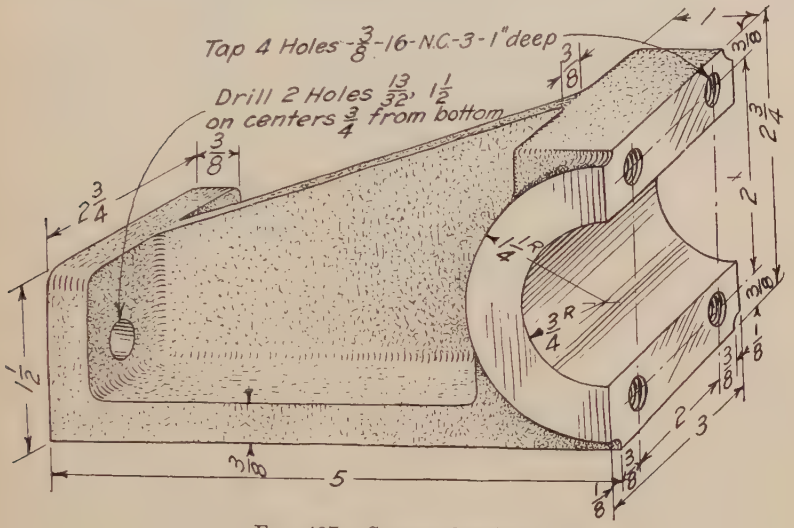

Fig. 497.—Support bearing.

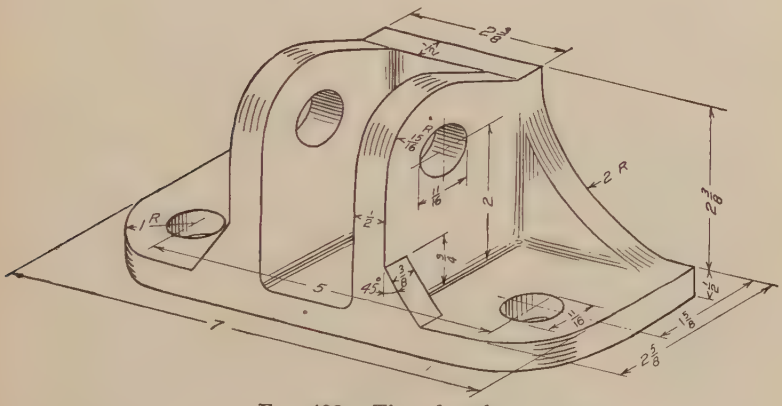

Fig. 498.—Tie rod anchor.

15. Fig. 511. Working drawing of gear-shifter bracket. This is a detail of the transmission box, Fig. 564.

16. Fig. 512. Working drawing of cast-iron pan, or still, for sulphuric acid works. Larger scale part-sections of inlet and outlet should be made, to avoid crowding dimensions on the complete views.

17. Fig. 513. Working drawing of face plate.

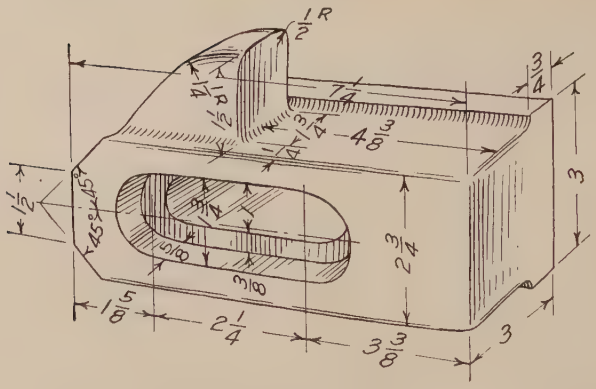

Fig. 499.—Steady rest jaw.

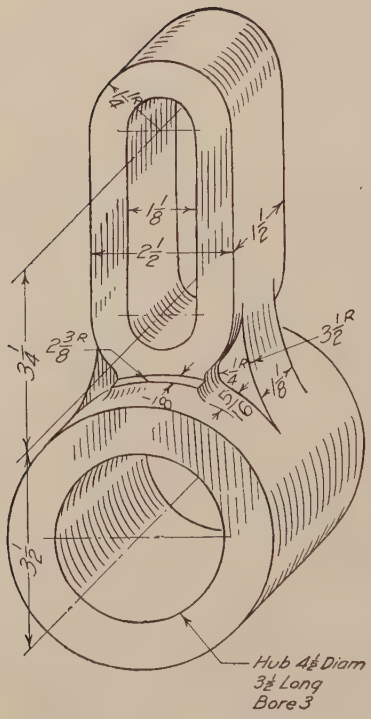

Fig. 500.—Compound gear arm.

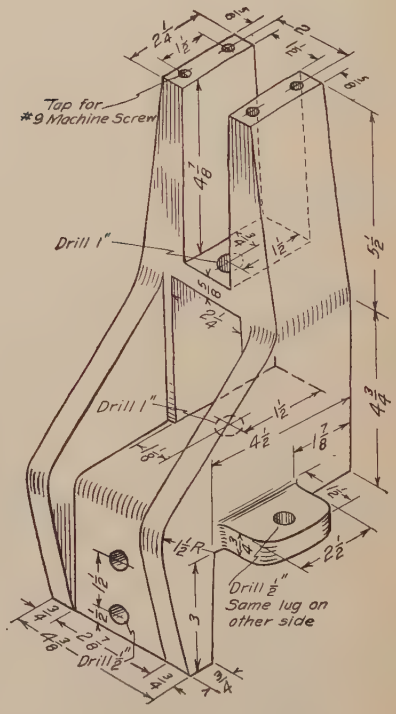

Fig. 501.—Offset bracket.

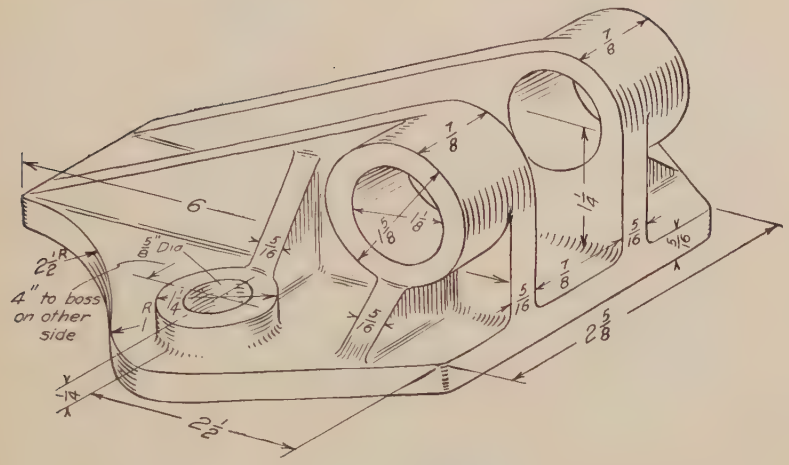

FIG. 502.—Bearing plate.

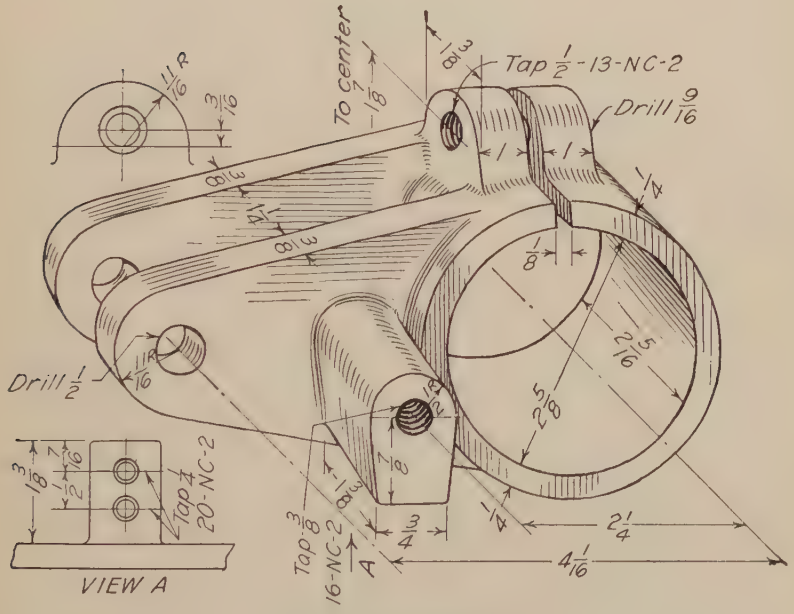

FIG. 503.—Spindle support.

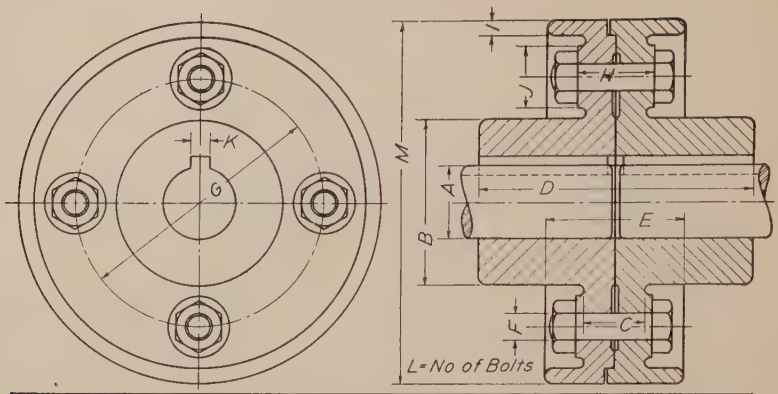

A	B	C	D	E	F	G	H	I	J	K	L	M
$1\frac{3}{16}$	$2\frac{3}{4}$	1	$4\frac{1}{2}$	$2\frac{1}{4}$	$\frac{7}{16}$	$4\frac{1}{8}$	$1\frac{1}{4}$	$\frac{1}{4}$	1	$\frac{5}{16}$	4	6
$1\frac{7}{16}$	$3\frac{1}{2}$	1	5	$2\frac{1}{2}$	$\frac{1}{2}$	$4\frac{13}{16}$	$1\frac{1}{4}$	$\frac{1}{4}$	$1\frac{1}{16}$	$\frac{3}{8}$	4	$6\frac{5}{8}$
$1\frac{11}{16}$	$3\frac{1}{4}$	$1\frac{1}{8}$	$5\frac{9}{16}$	3	$\frac{5}{8}$	5	$1\frac{3}{8}$	$\frac{5}{16}$	$1\frac{5}{16}$	$\frac{3}{8}$	4	$7\frac{1}{4}$
$1\frac{15}{16}$	$3\frac{7}{8}$	$1\frac{1}{4}$	$6\frac{1}{8}$	$3\frac{1}{4}$	$\frac{5}{8}$	$5\frac{5}{8}$	$1\frac{1}{2}$	$\frac{5}{16}$	$1\frac{5}{16}$	$\frac{1}{2}$	4	$7\frac{13}{16}$
$2\frac{3}{16}$	$3\frac{7}{8}$	$1\frac{3}{8}$	$6\frac{5}{8}$	$3\frac{1}{2}$	$\frac{3}{4}$	$5\frac{7}{8}$	$1\frac{3}{4}$	$\frac{5}{16}$	$1\frac{1}{2}$	$\frac{1}{2}$	4	$8\frac{3}{8}$
$2\frac{7}{16}$	$4\frac{1}{2}$	$1\frac{1}{2}$	$7\frac{1}{4}$	$3\frac{3}{4}$	$\frac{3}{4}$	$6\frac{3}{8}$	$1\frac{7}{8}$	$\frac{3}{8}$	$1\frac{1}{2}$	$\frac{5}{8}$	4	9

Fig. 504.—Flange coupling.

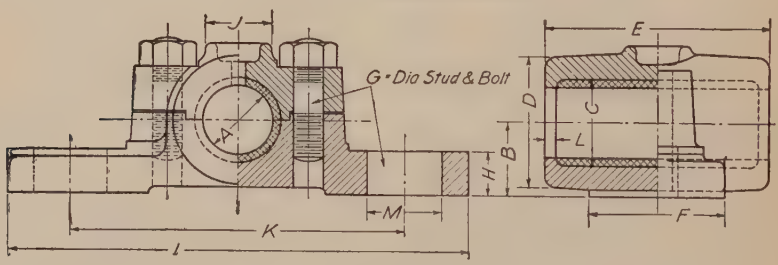

A	B	C	D	E	F	G	H	I	J	K	L	M
$1\frac{3}{16}$	$1\frac{1}{4}$	$1\frac{1}{2}$	$2\frac{1}{4}$	$3\frac{3}{4}$	$2\frac{1}{4}$	$\frac{1}{2}$	$\frac{3}{4}$	$7\frac{3}{4}$	$1\frac{1}{8}$	$5\frac{5}{8}$	$\frac{3}{16}$	$1\frac{1}{4}$
$1\frac{7}{16}$	$1\frac{7}{16}$	$1\frac{3}{4}$	$2\frac{5}{8}$	$4\frac{1}{2}$	$2\frac{5}{8}$	$\frac{1}{2}$	$\frac{13}{16}$	8	$1\frac{1}{4}$	$5\frac{7}{8}$	$\frac{3}{16}$	$1\frac{1}{4}$
$1\frac{11}{16}$	$1\frac{5}{8}$	$2\frac{1}{16}$	3	$5\frac{1}{4}$	3	$\frac{1}{2}$	$\frac{7}{8}$	$8\frac{1}{2}$	$1\frac{1}{4}$	$6\frac{3}{8}$	$\frac{3}{16}$	$1\frac{1}{4}$
$1\frac{15}{16}$	$1\frac{11}{16}$	$2\frac{3}{8}$	$3\frac{3}{8}$	6	$3\frac{3}{8}$	$\frac{5}{8}$	$\frac{7}{8}$	$10\frac{1}{4}$	$1\frac{3}{8}$	$7\frac{11}{16}$	$\frac{1}{4}$	$1\frac{1}{2}$
$2\frac{3}{16}$	2	$2\frac{11}{16}$	$3\frac{3}{4}$	$6\frac{3}{4}$	$3\frac{3}{4}$	$\frac{5}{8}$	1	$10\frac{3}{8}$	$1\frac{1}{2}$	$7\frac{7}{8}$	$\frac{1}{4}$	$1\frac{1}{2}$
$2\frac{7}{16}$	$2\frac{1}{8}$	$2\frac{15}{16}$	$4\frac{1}{8}$	$7\frac{1}{2}$	4	$\frac{3}{4}$	$1\frac{1}{16}$	$10\frac{3}{4}$	$1\frac{1}{2}$	$8\frac{1}{4}$	$\frac{1}{4}$	$1\frac{1}{2}$

Fig. 505.—Pillow block.

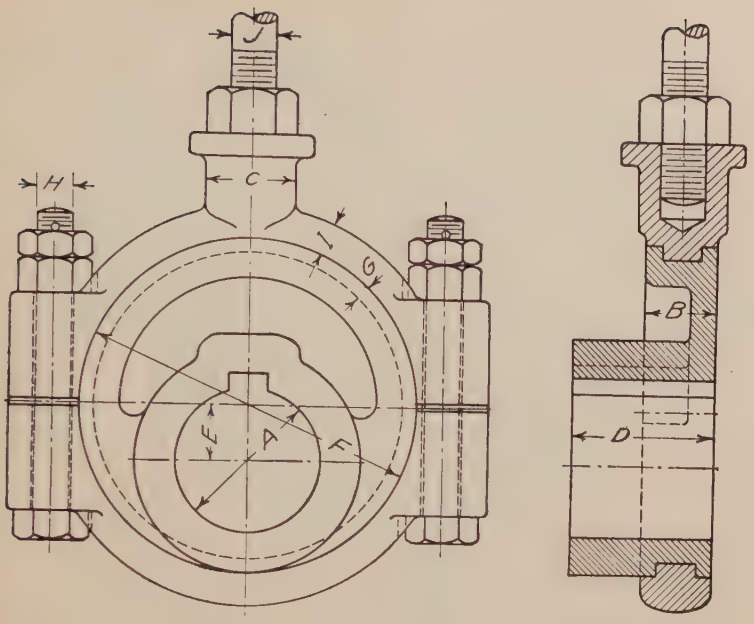

A	B	C	D	E	F	G	H	I	J
$1\frac{1}{4}$	$\frac{7}{8}$	1	$1\frac{3}{4}$	$\frac{5}{8}$	$3\frac{3}{8}$	$\frac{3}{32}$	$\frac{7}{16}$	$\frac{5}{16}$	$\frac{1}{2}$
$1\frac{1}{2}$	$\frac{7}{8}$	$1\frac{1}{4}$	$1\frac{3}{4}$	$\frac{5}{8}$	$3\frac{5}{8}$	$\frac{1}{8}$	$\frac{1}{2}$	$\frac{5}{16}$	$\frac{5}{8}$
$1\frac{3}{4}$	1	$1\frac{1}{4}$	2	$\frac{5}{8}$	$4\frac{1}{8}$	$\frac{1}{8}$	$\frac{1}{2}$	$\frac{3}{8}$	$\frac{5}{8}$
2	1	$1\frac{1}{4}$	2	$\frac{3}{4}$	$4\frac{5}{8}$	$\frac{1}{8}$	$\frac{1}{2}$	$\frac{3}{8}$	$\frac{5}{8}$
$2\frac{1}{4}$	$1\frac{1}{8}$	$1\frac{1}{2}$	$2\frac{1}{4}$	$\frac{3}{4}$	5	$\frac{3}{16}$	$\frac{9}{16}$	$\frac{7}{16}$	$\frac{3}{4}$
$2\frac{1}{2}$	$1\frac{1}{8}$	$1\frac{1}{2}$	$2\frac{1}{4}$	$\frac{3}{4}$	$5\frac{1}{4}$	$\frac{3}{16}$	$\frac{5}{8}$	$\frac{1}{2}$	$\frac{3}{4}$

FIG. 506.—Eccentric and strap.

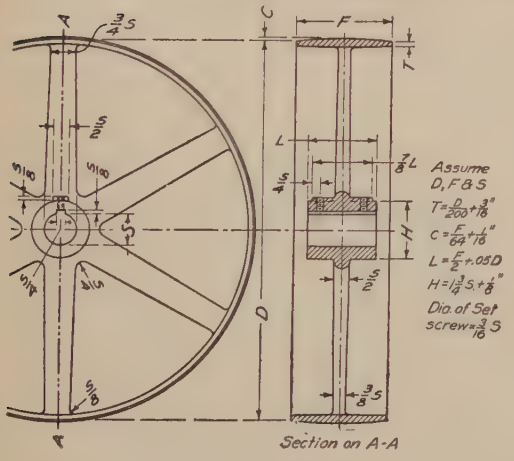

FIG. 507.—Flywheel.

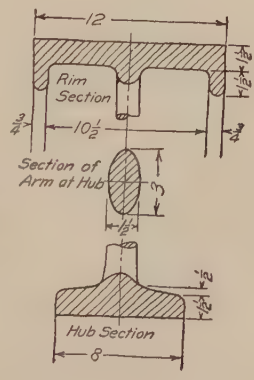

FIG. 508.—Pulley.

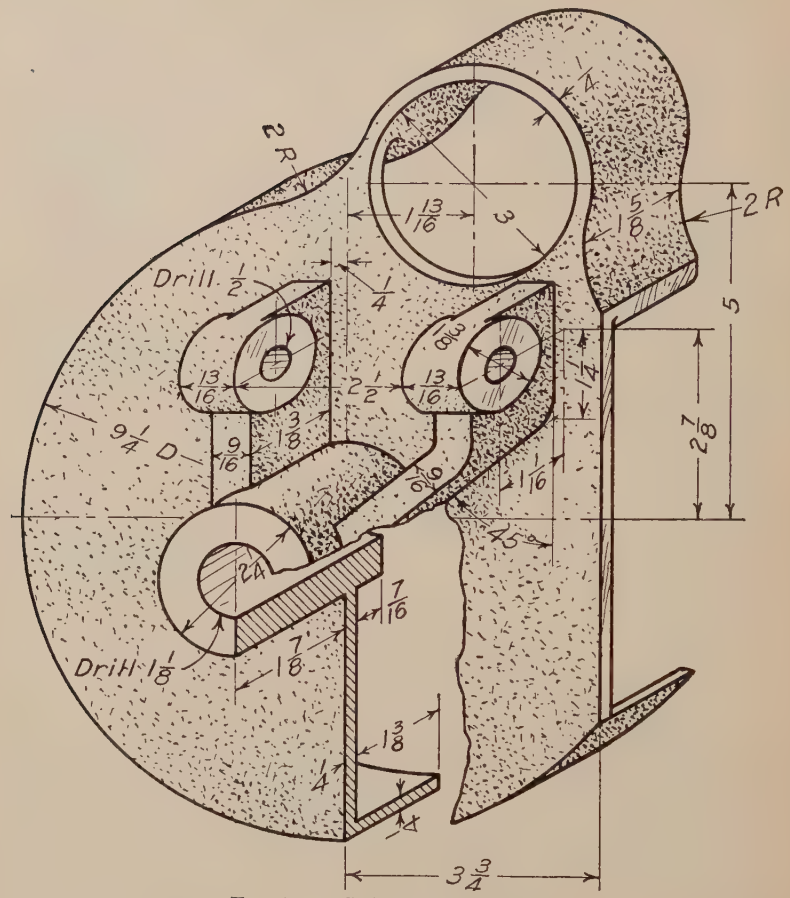

Fig. 509.—Swivel bracket guard.

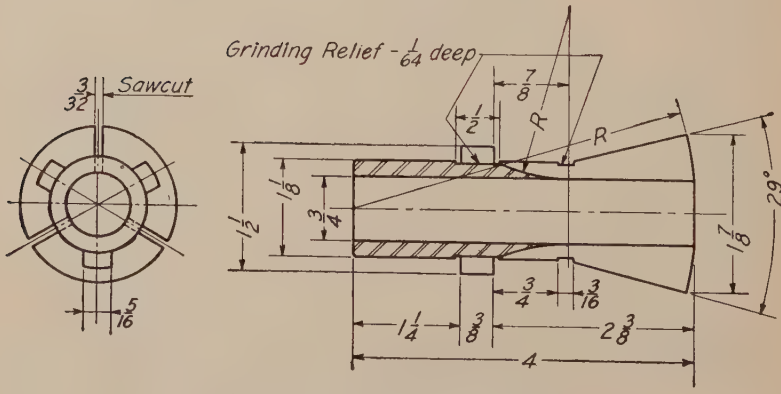

Fig. 510.—Draw-in chuck collet.

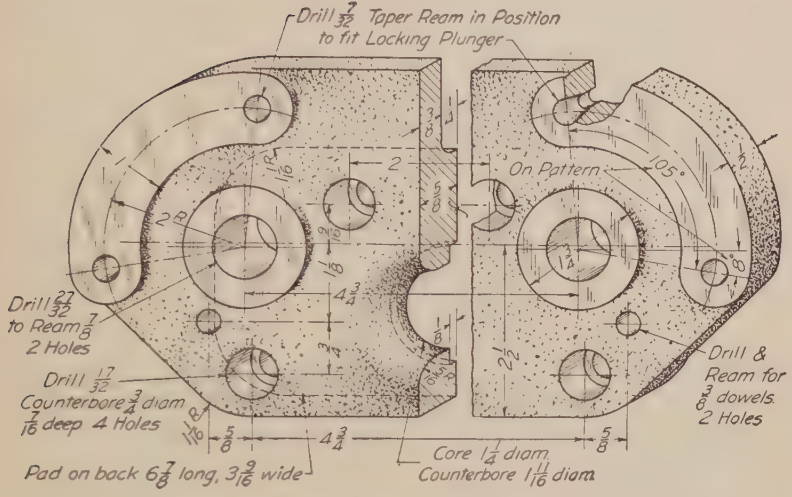
Drill 7/32 Taper Ream in Position to fit Locking Plunger
On Pattern
105°
Drill 27/32 to Ream 7/8 2 Holes
Drill 17/32 Counterbore 3/4 diam 7/16 deep 4 Holes
Drill & Ream for 3/8 dowels. 2 Holes
Core 1 1/4 diam Counterbore 1 11/16 diam
Pad on back 6 7/8 long, 3 9/16 wide

Fig. 511.—Gear shifter bracket.

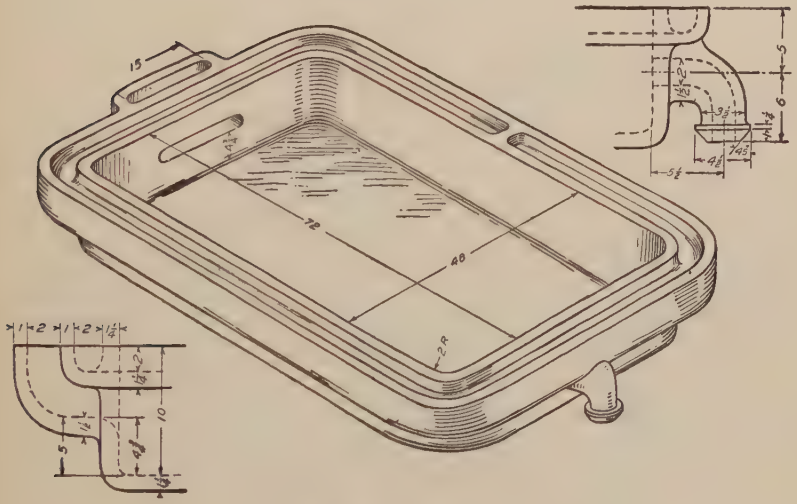

Fig. 512.—Acid pan.

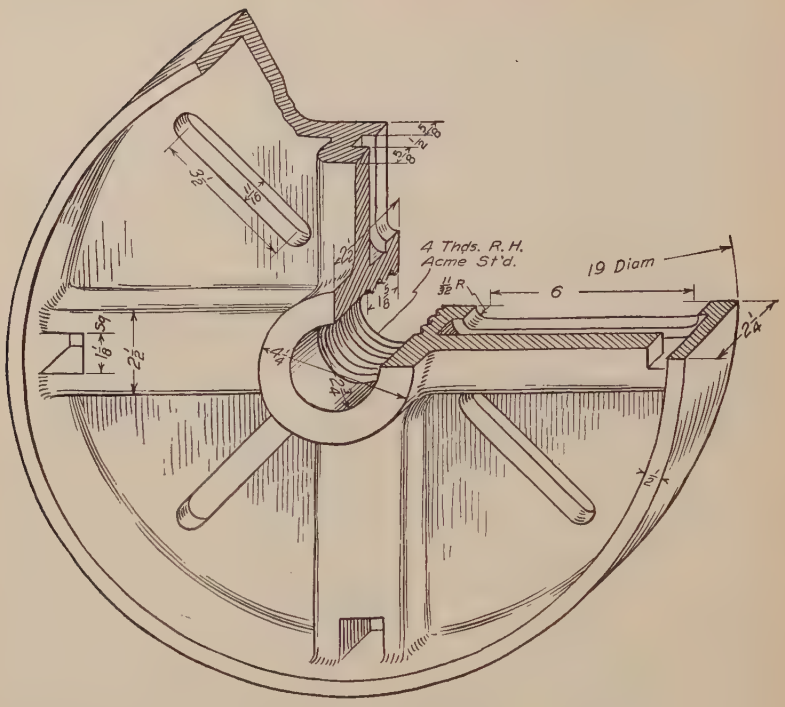

FIG. 513.—Face plate.

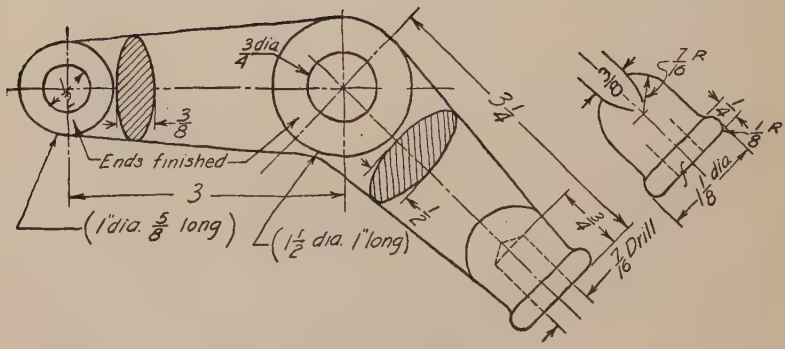

FIG. 514.—Gear shifter lever.

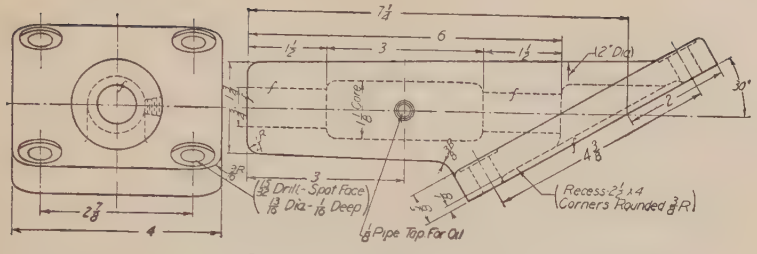
7¼
6
3
1½
1½
1½

Group III. Auxiliary Projection Studies

18. Fig. 514. Working drawing of gear-shifter lever.
19. Fig. 515. Working drawing of angle bracket.
20. Fig. 516. Working drawing of rocker arm.
21. Fig. 517. Working drawing of bevel-gear housing.

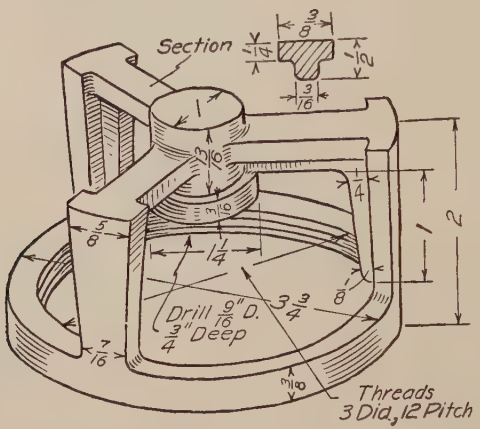

Fig. 518.—Valve cage.

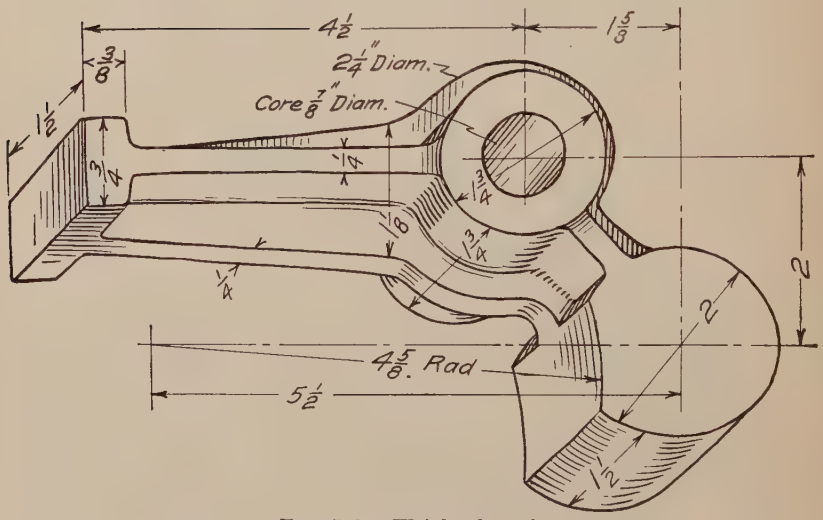

Fig. 519.—Weighted pawl.

Group IV. Special Representation

22 to 26. Figs. 518 to 522. Make working drawings, selecting views carefully. True projection sometimes gives views not only difficult to draw but often of doubtful value in representation. These examples illustrate the statements of paragraphs 207 to 209 regarding the violation of theory both in sectional and exterior views.

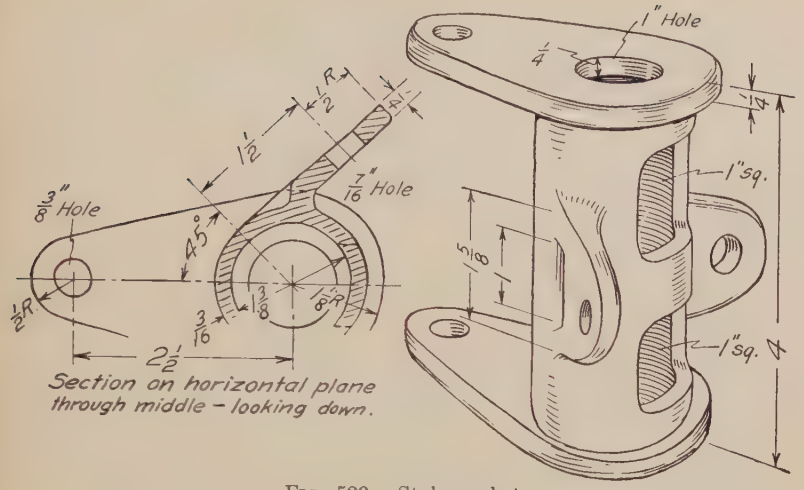

Fig. 520.—Stake socket.

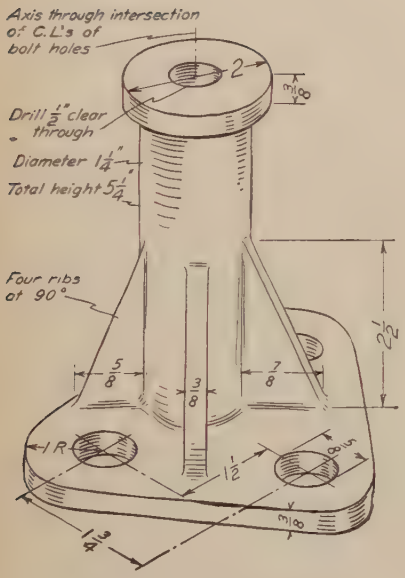

Fig. 521.—Stem support.

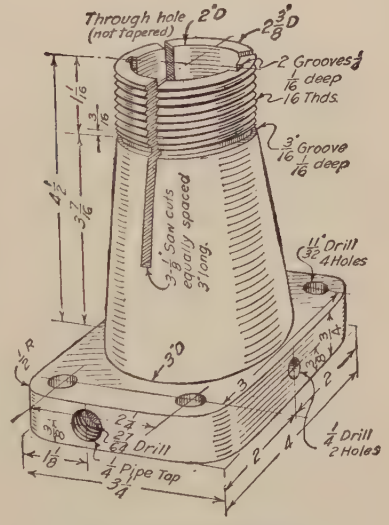

Fig. 522.—Split bushing.

Group V. Small Assembly Drawings from Details

27. Fig. 523. Assembly drawing of pump valve. Valve seat, stem, and spring are brass, disc is rubber. This valve fits pump body, Fig. 554.

28. Fig. 524. Assembly drawing of $1\frac{1}{4}''$ brass air-relief valve.

29. Assembly drawing of leveling block from sketches in Fig. 580.

Group VI. Details from Assembly Drawings

30. Fig. 525. Make detail drawings for hanger.

31. Fig. 526. Make detail drawings for belt tightener. Number the parts and make a material list.

32. Fig. 527. Make detail drawings for belt drive.

33. Fig. 528. Make detail drawings for lubricant pump. Note that on the end view, shown with cover removed, the gears are represented conventionally.

34. Fig. 529. Make detail drawings for tool post.

35. Fig. 530. Make detail drawings for conveyer roll. The dimensions of the roller bearings may be found in a Timken catalogue.

36. Fig. 531. Make detail drawings for aeroplane propeller mounting.

37. Fig. 532. Make detail drawings and bill of material for swing saw frame head. The bearing sizes may be obtained from a ball bearing catalogue. For belt clearance make the base elliptical, $5'' \times 4''$.

38. Fig. 533. Make detail drawings for the drag link.

39. Fig. 534. Make detail drawings for split nut. This well-known mechanism provides for engagement and disengagement of a nut on a screw while the screw is in motion. A 90-degree movement of the hand lever actuates the two pins in the half-nuts by means of the milled slots in the cam, thus raising or lowering the half-nuts.

40. Fig. 535. Make detail drawings for ball-bearing idler pulley. Contour of web to be designed.

41. Fig. 536. Make detail drawings for compensating nut. The purpose of this device is to take up the wear resulting from heavy duty imposed on a feed screw. To adjust the nut the cap screw at the left is loosened and the nut on the draw screw is tightened, the wedging action pushing the loose nut to the left until all lost motion is taken up.

42. Fig. 537. Make detail drawings and bill of material for single plate automobile clutch. The piece names are *A*, flywheel; *B*, transmission main drive gear bearing retainer; *C*, clutch pressure plate; *D*, driven plate; *E*, clutch case; *F*, pressure spring thimble; *G*, pressure lever; *H*, pressure pin; *J*, pressure lever fulcrum plate; *K*, pressure lever guide plate; *L*, pressure release bearing sleeve; *M*, pilot bearing packing plate; *N*, pilot bearing packing ring; *O*, clutch pilot bearing; *P*, pressure release bearing.

43. Fig. 538. Make detail drawings for independent face-plate chuck.

44. Fig. 539. Make detail drawings for 16″ built-up steam engine piston, including piston, follower, piston nut, front, back and middle sections of bull-ring, piston rings and studs. The back section of bull ring is next to the follower.

Group VII. Checking Studies

45 to 50. Figs. 540 to 545. These drawings are incorrect in technique, representation and dimensioning. Check for errors, following the system given in paragraph 219, and redraw in good form, redesigning to better

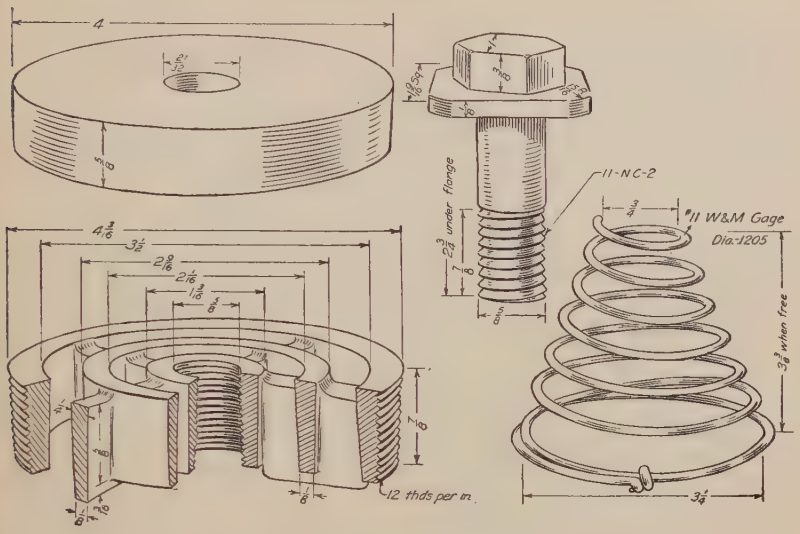

FIG. 523.—Pump valve details.

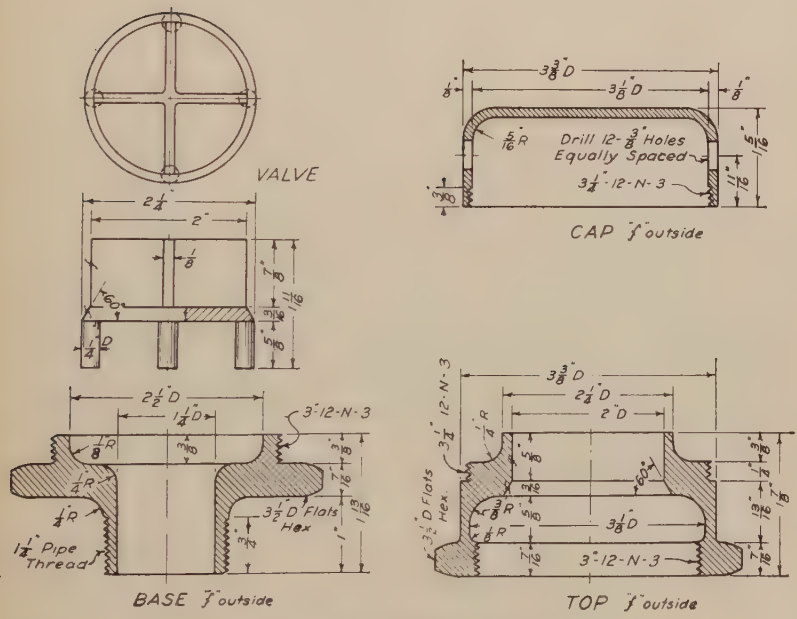

FIG. 524.—Air relief valve.

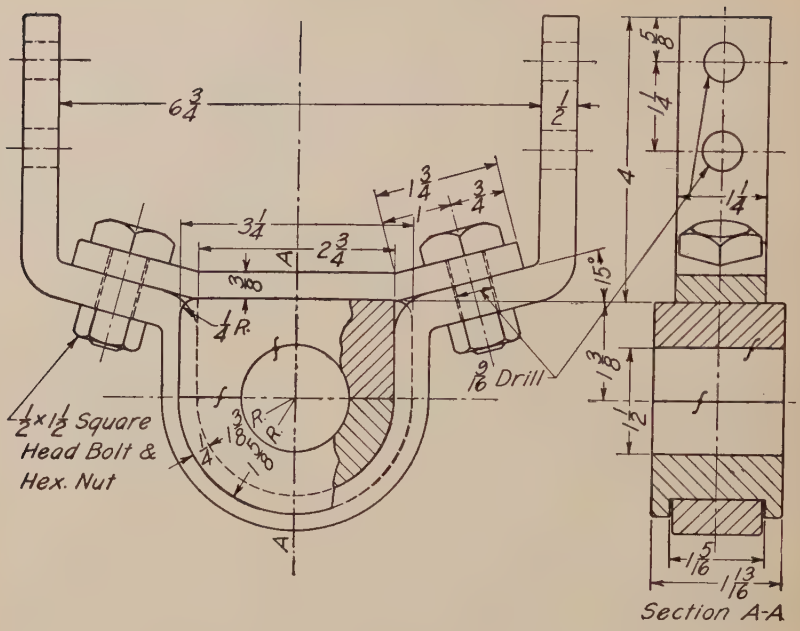

Fig. 525.—Strap hanger.

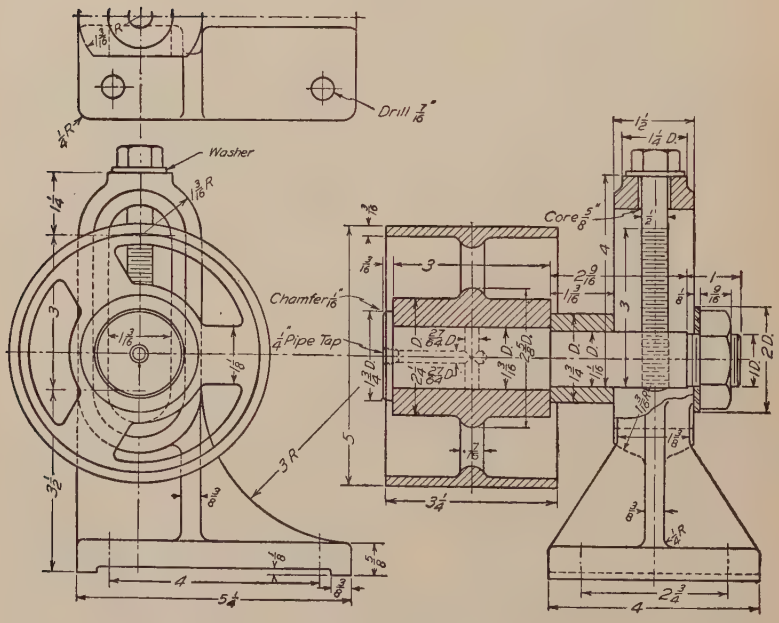

Fig. 526.—Belt tightener.

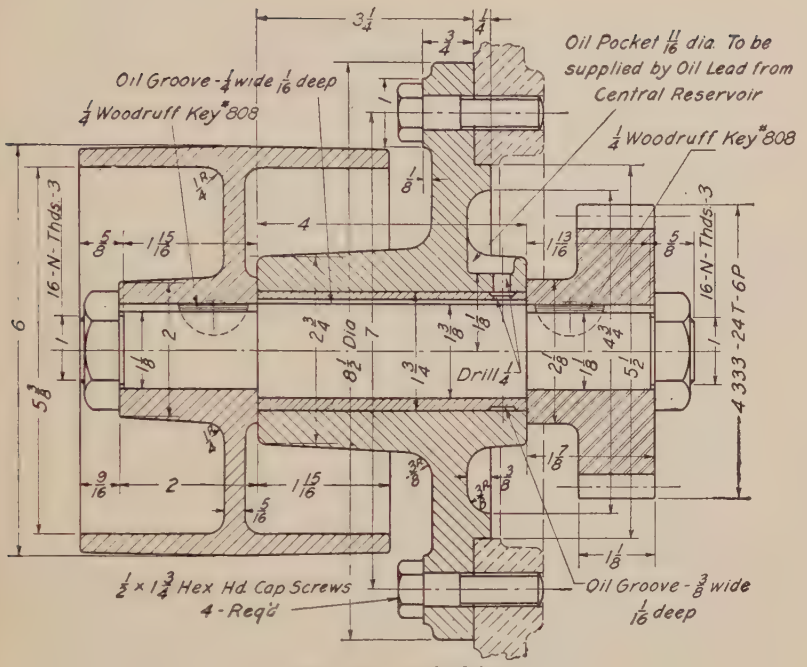
Oil Groove - 1/4 wide 1/16 deep
1/4 Woodruff Key #808
Oil Pocket 11/16 dia. To be supplied by Oil Lead from Central Reservoir
1/4 Woodruff Key #808
16-N-Thds-3
16-N-Thds-3
4 333-24T-6P
Drill 1/4
1/2 x 1 3/4 Hex Hd Cap Screws 4-Req'd
Oil Groove - 3/8 wide 1/16 deep

FIG. 527.—Belt drive.

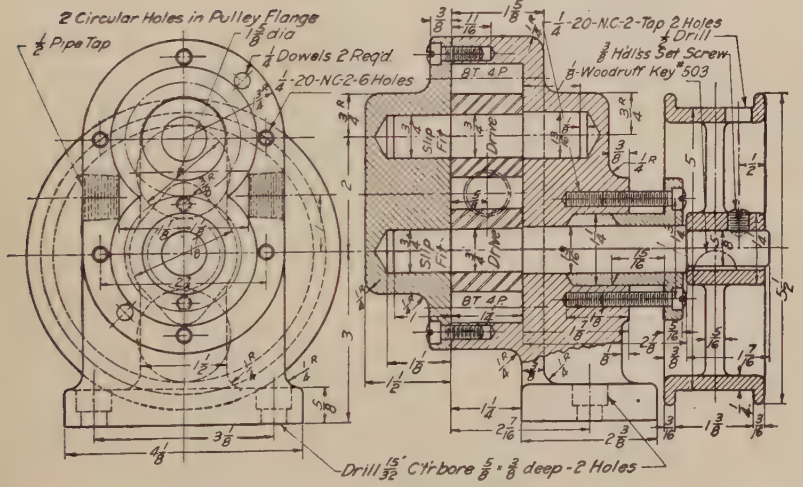

FIG. 528.—Lubricant pump.

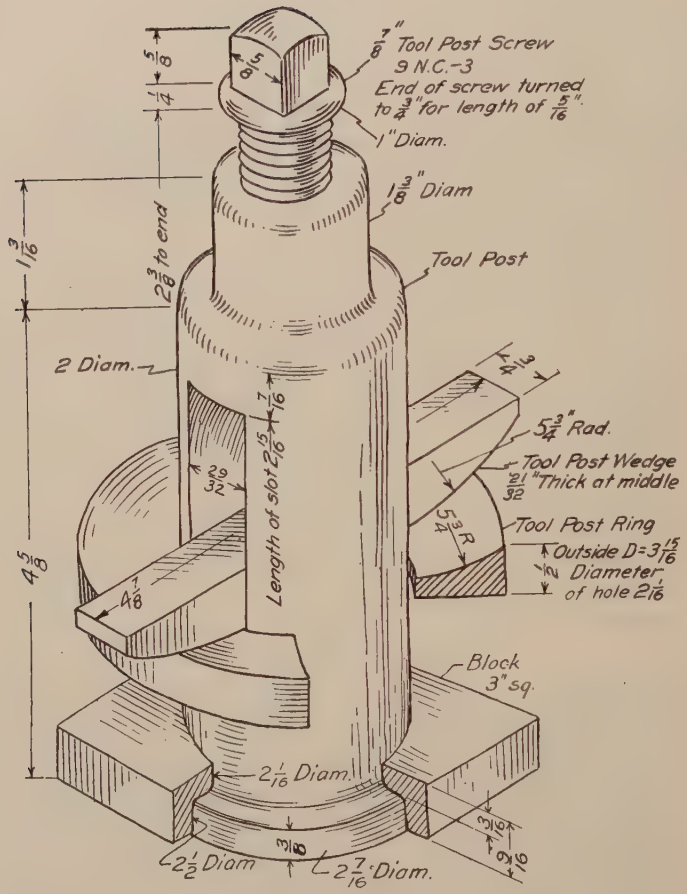

Fig. 529.—Tool post.

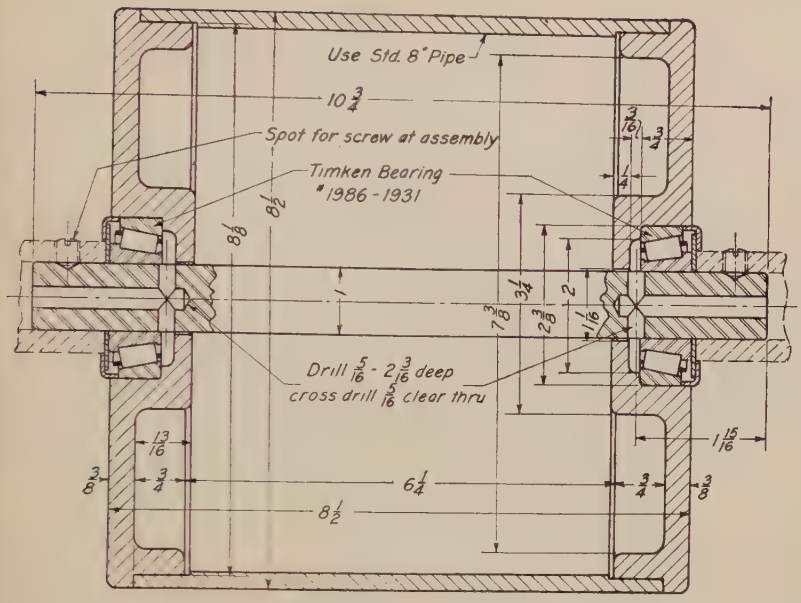

FIG. 530.—Conveyer roll.

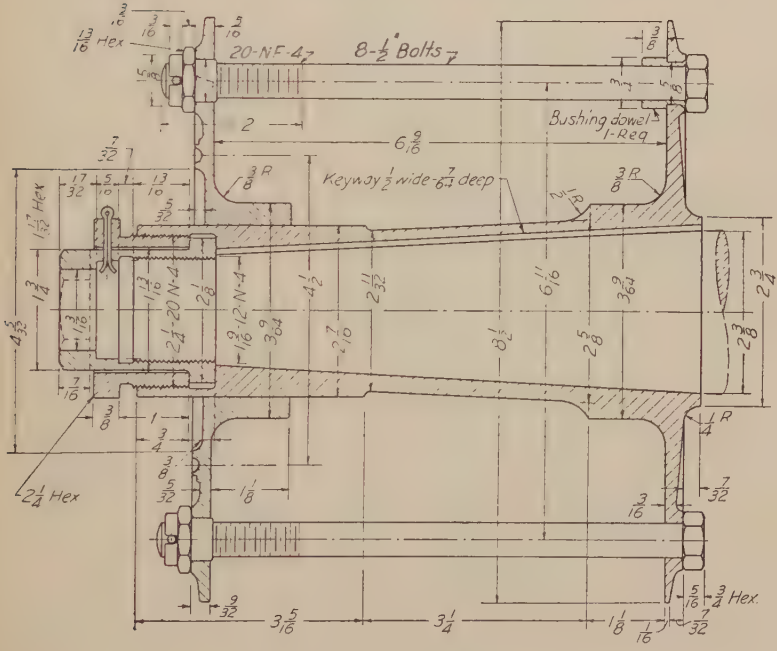

FIG. 531.—Propeller hub.

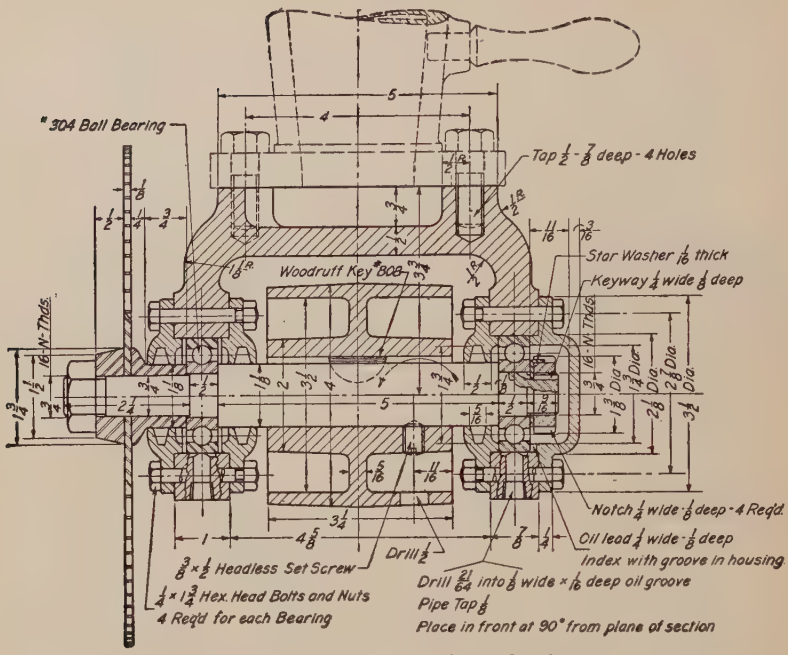
"304 Ball Bearing
Top ½ - ⅞ deep - 4 Holes
Star Washer ⅛ thick
Keyway ¼ wide ⅛ deep
Woodruff Key #808
12-N-Thds.
Notch ¼ wide ⅛ deep - 4 Req'd.
Oil lead ¼ wide - ⅛ deep
Index with groove in housing
Drill ½
⅜ × ½ Headless Set Screw
¼ × 1¾ Hex. Head Bolts and Nuts
4 Req'd for each Bearing
Drill 21/64 into ⅜ wide × ⅛ deep oil groove
Pipe Top ⅜
Place in front at 90° from plane of section

FIG. 532.—Swing saw-frame head.

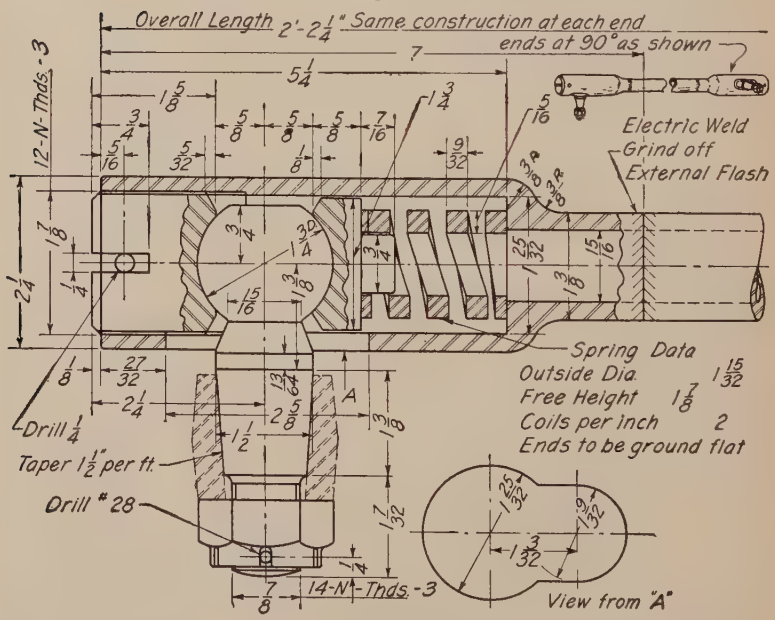

FIG. 533.—Drag link.

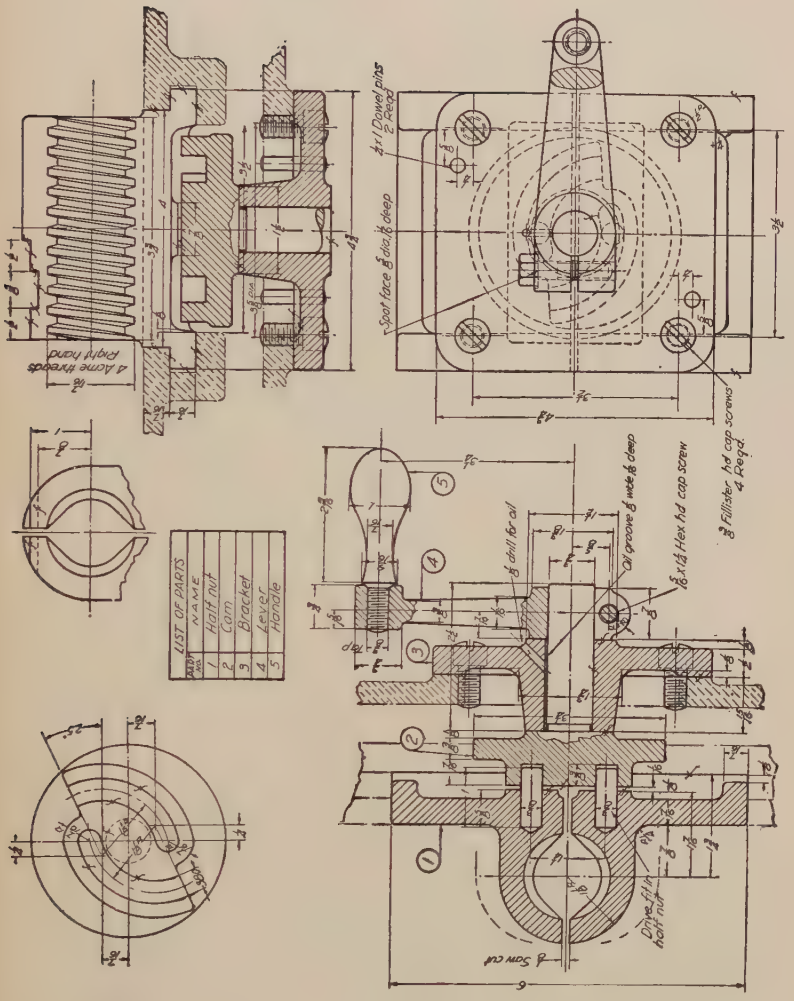
4 Acme threads right hand
4 r I Dowel pins 2 Reqd.
Spot face ⅝ dia. ⅛ deep
Drill for oil
Oil groove ⅜ wide ⅛ deep
⅝ x 1¼ Hex hd cap screw
⅜ Fillister hd cap screws 4 Reqd.
Saw cut
Drive fit in half nut
LIST OF PARTS
No. NAME
1 Half nut
2 Cam
3 Bracket
4 Lever
5 Handle

Fig. 534.—Split nut.

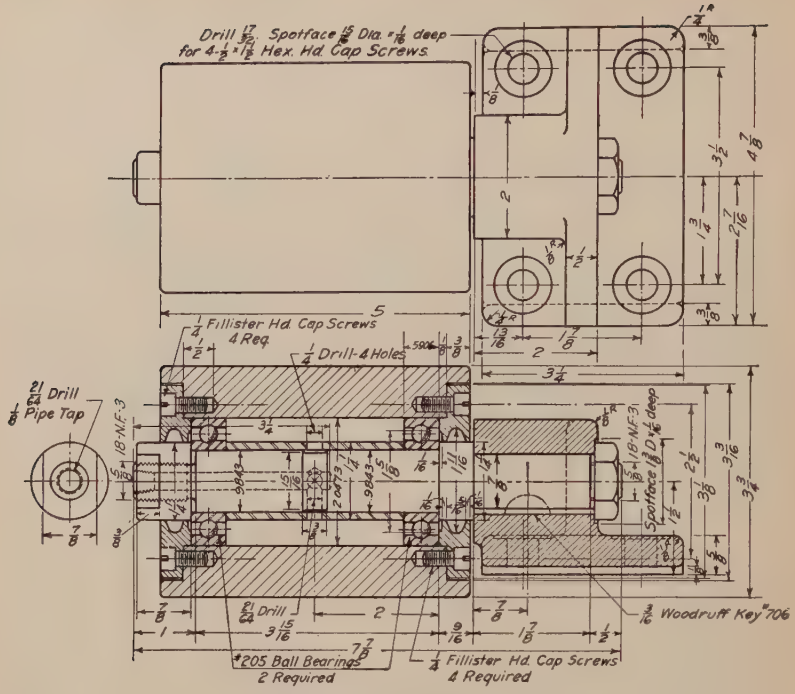
Drill 17/32 Spotface 5/8 Dia. x 1/16 deep for 4-1/2 x 1/8 Hex. Hd. Cap Screws
1/4 Fillister Hd. Cap Screws 4 Req.
1/4 Drill-4 Holes
21/64 Drill 1/8 Pipe Tap
.18 N.F.3
Spotface 1/8 D x 1/16 deep
21/64 Drill
3/16 Woodruff Key #706
#205 Ball Bearings 2 Required
1/4 Fillister Hd. Cap Screws 4 Required

Fig. 535.—Ball bearing idler pulley.

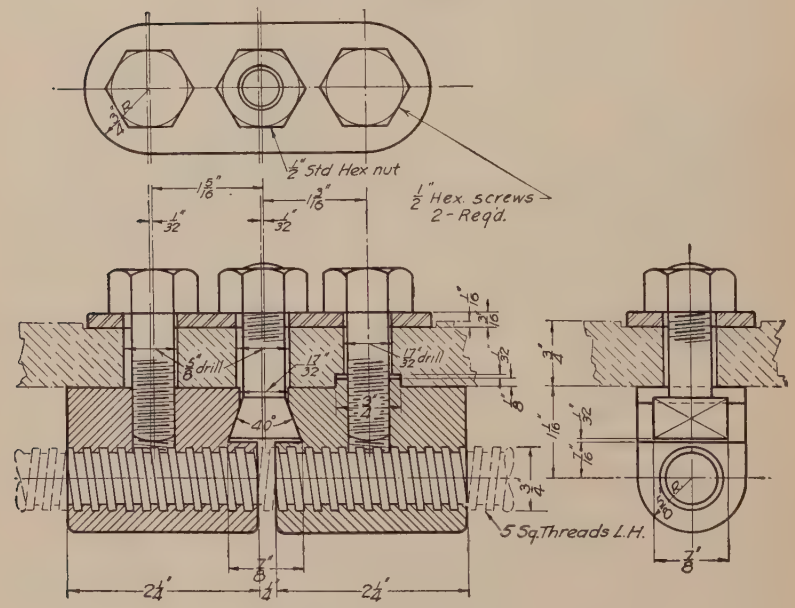

Fig. 536.—Compensating nut.

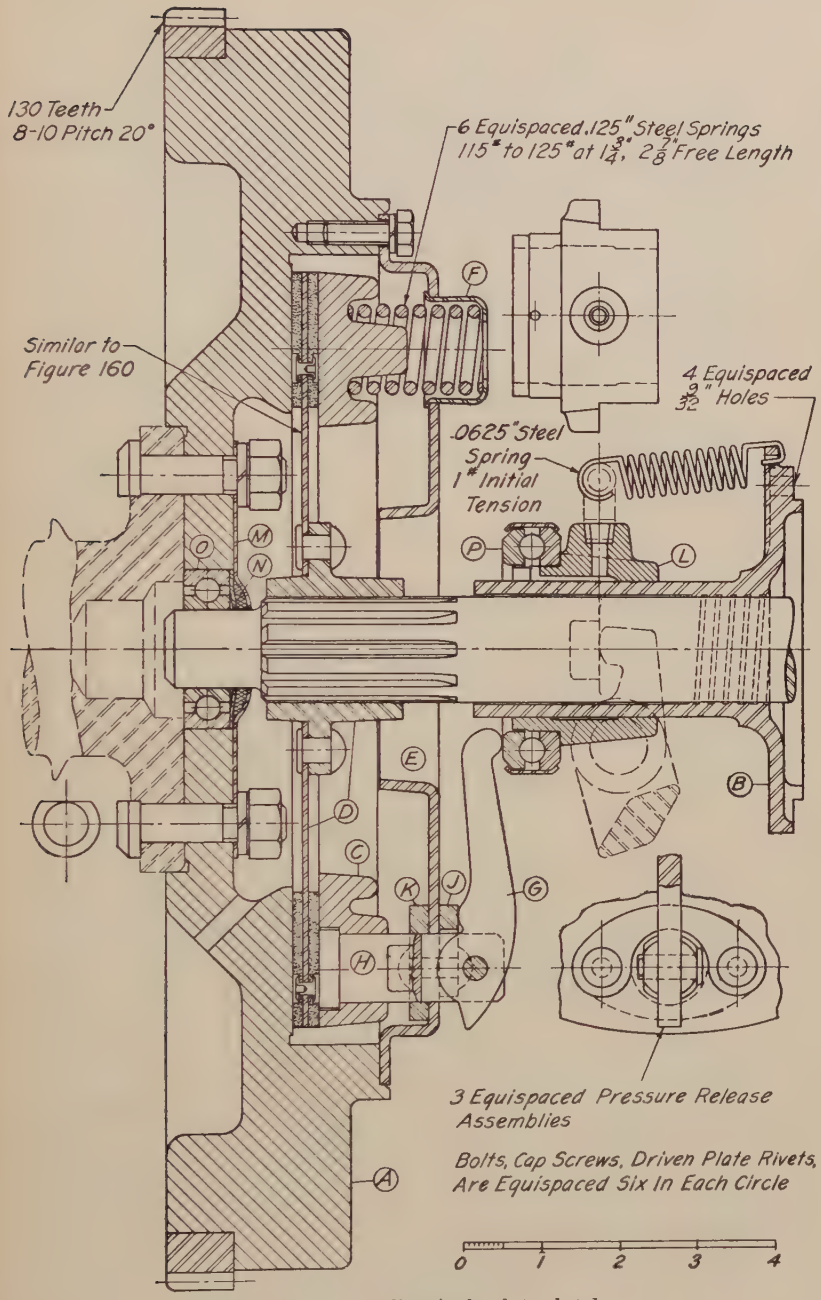

FIG. 537.—Dry disc single plate clutch.

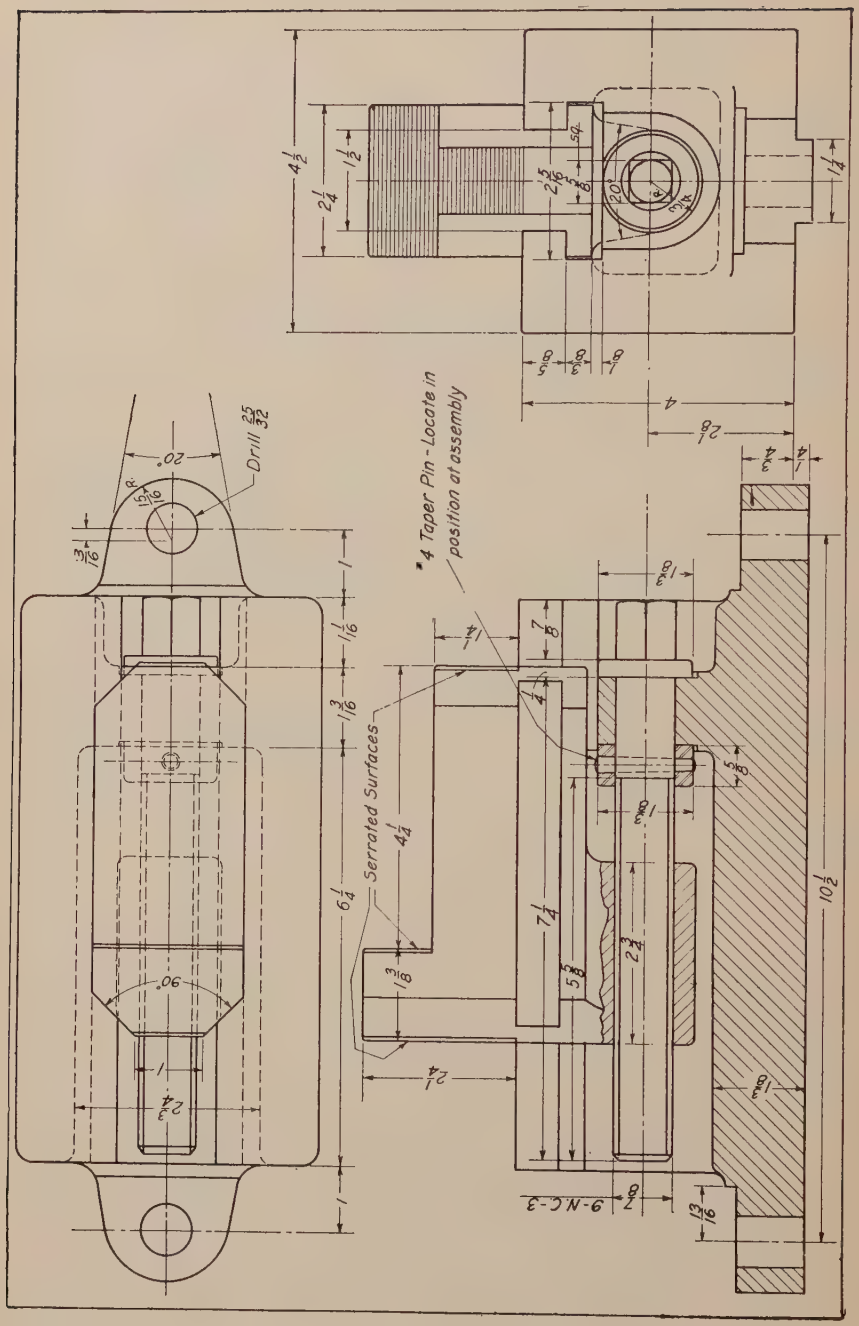

FIG. 538.—Independent face plate chuck.

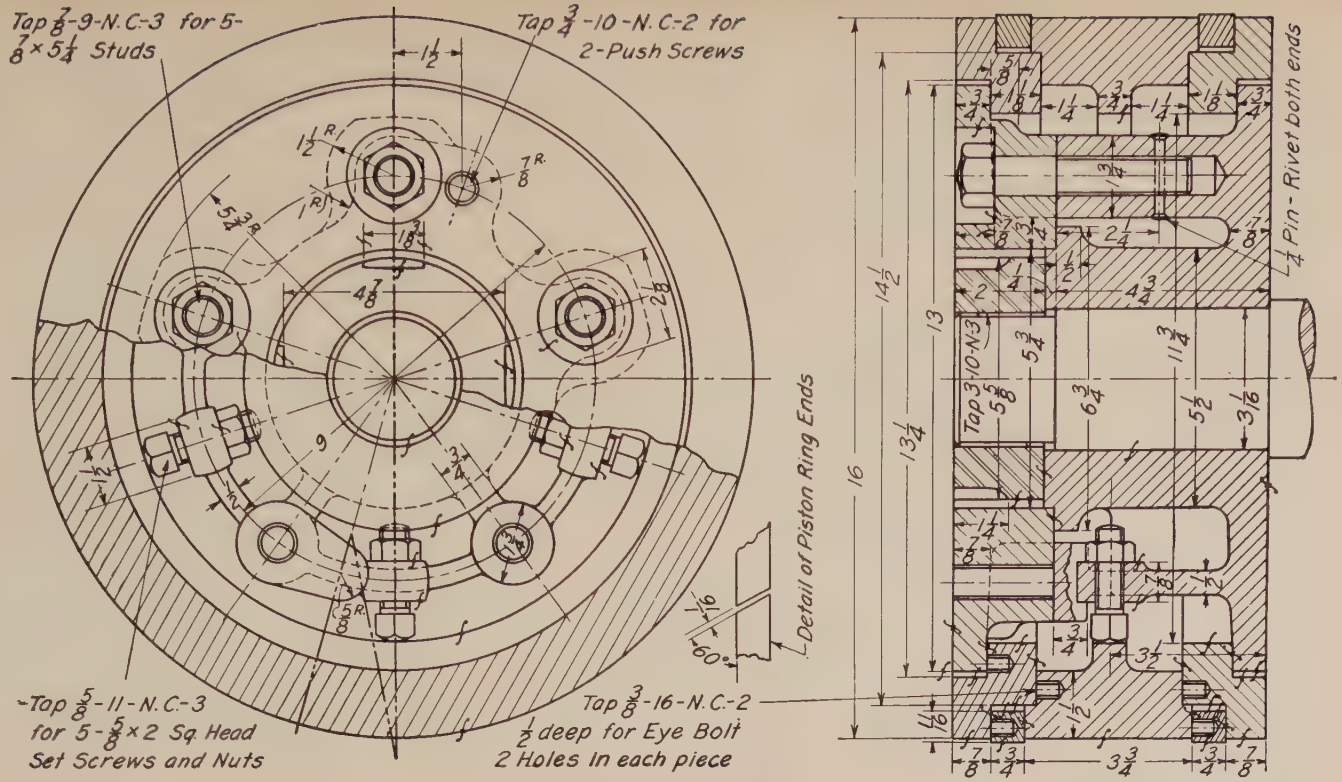
Tap 7/8-9-N.C.-3 for 5-7/8 × 5 1/4 Studs
Tap 3/4-10-N.C.-2 for 2-Push Screws
Tap 5/8-11-N.C.-3 for 5-5/8 × 2 Sq. Head Set Screws and Nuts
Tap 3/8-16-N.C.-2 1/2 deep for Eye Bolt 2 Holes in each piece
Detail of Piston Ring Ends
1/4 Pin - Rivet both ends
Tap 3-10-N.3

FIG. 539.—Built-up steam piston.

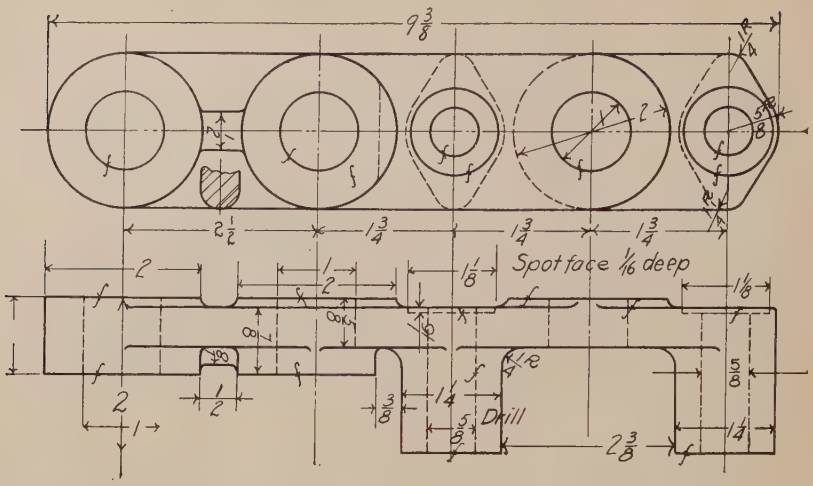

FIG 540.—An *incorrect* drawing to be checked for errors (gear shifter bracket).

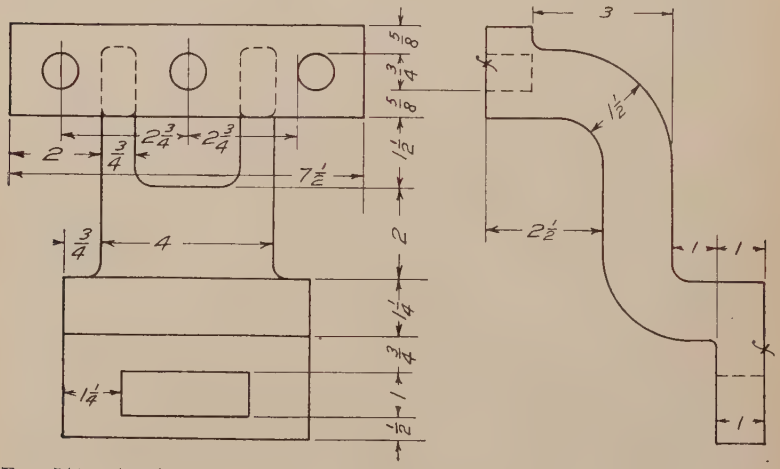

FIG. 541.—An *incorrect* drawing to be checked for errors (offset bracket).

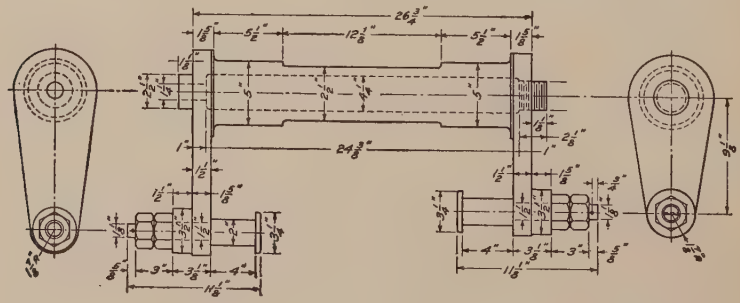

FIG. 542.—An *incorrect* drawing to be checked for errors (rocker arm).

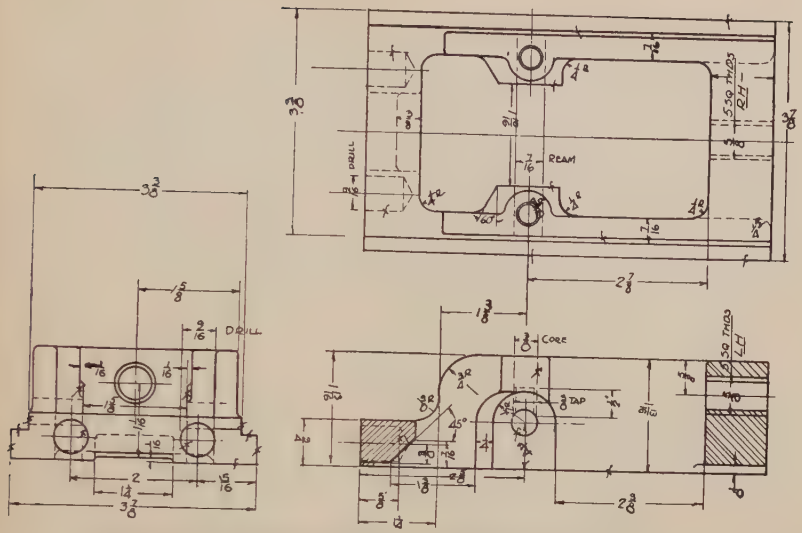

FIG. 543.—An *incorrect* drawing to be checked for errors (sliding block).

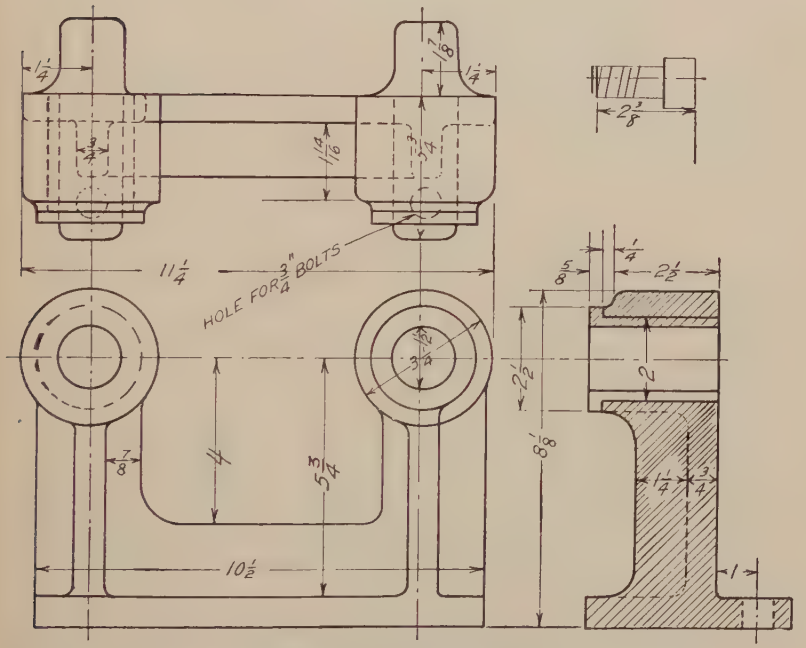

FIG. 544.—An *incorrect* drawing to be checked for errors (bushed bearing support).

proportions where advisable. Mark the faults in pencil on the figure before redrawing.

Group VIII. Assembly and Detail Drawings

NOTE.—In this group the illustrations are not to be taken as examples of good spacing in working drawings. The size of the page has necessitated crowding the views and dimensions in most cases much more than should be done on a regular drawing. Many of the details are given as one-view sketches such as a draftsman might make in his note book or on a scratch pad.

51. Fig. 546. Make an assembly drawing of friction clutch shifter. The small pictorial view is inserted only as an aid to the student.

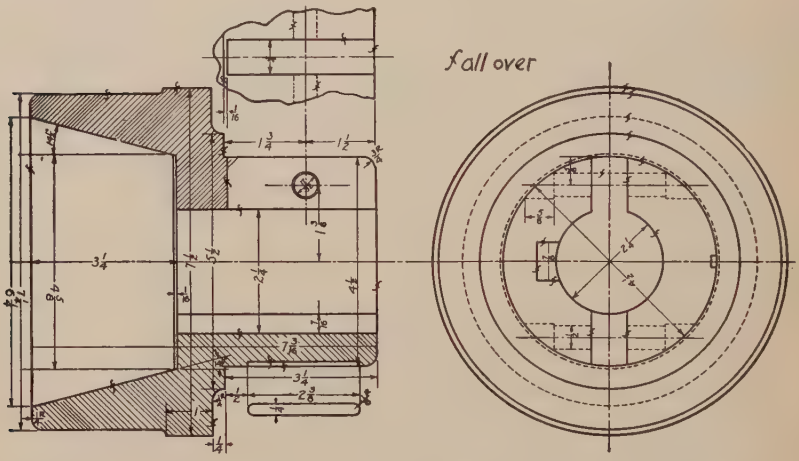

FIG. 545.—An *incorrect* drawing to be checked for errors (driven cone).

52. Fig. 547. Make an assembly drawing of drill press vise.

53. Fig. 548. Make an assembly drawing of bench grinder. Supply nuts, bolts, set screws, grease cups and grinding wheels.

54. Fig. 548. Redesign bench grinder for ball-bearing installation.

55. Fig. 549. Make an assembly drawing of the ball bearing spring shackle.

56. Fig. 550. Make assembly drawing of piston, master rod and articulated rod (baby rod) for Wright Whirlwind engine.

In this problem nominal dimensions only have been used instead of the manufacturing limits of the maker, and numerous details of design, such as locking devices, lubrication ducts, etc., have been intentionally omitted, to simplify it as a drawing problem, as well as to respect the wishes of the company in avoiding publication of detailed information on such a highly specialized product.

57. Fig. 551. Make detail drawings of steam-jacketed laboratory autoclave. An autoclave is a piece of chemical apparatus used where chemical action under pressure is required. It may be built with a steam jacket

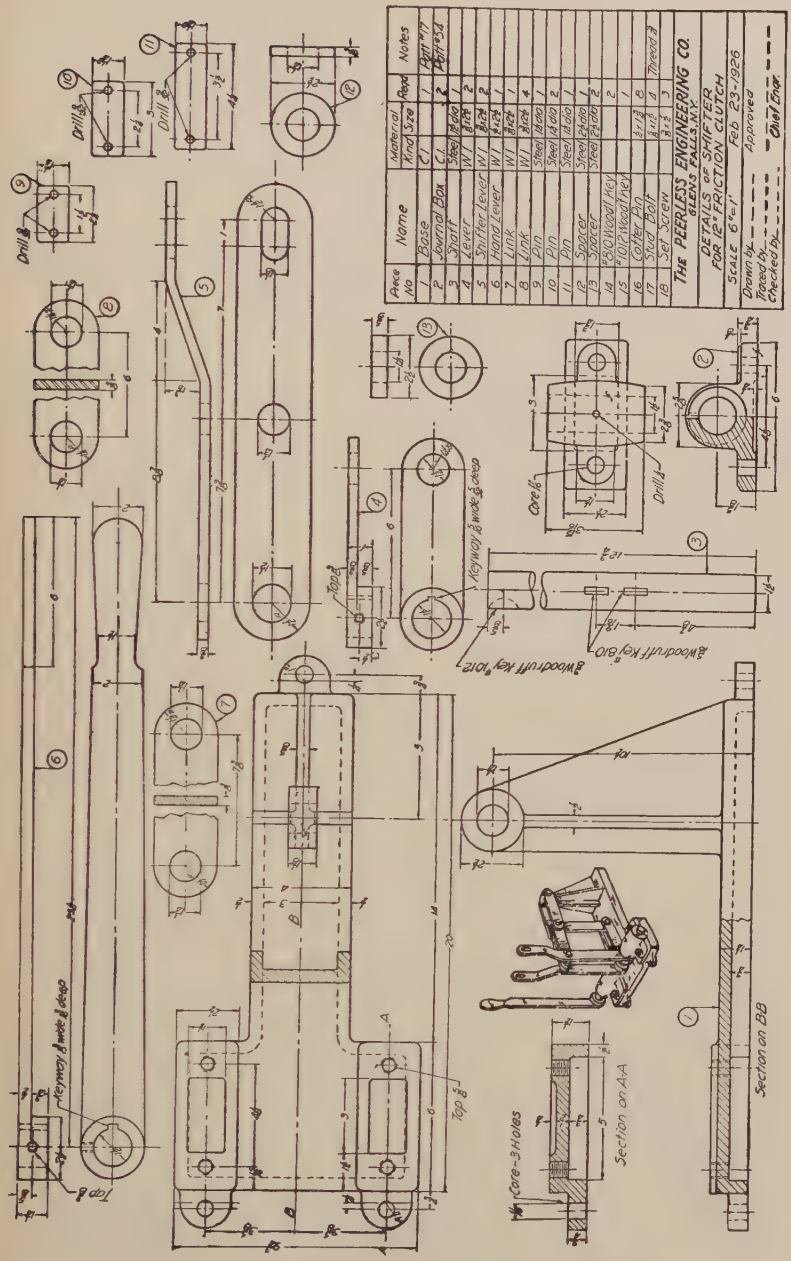
Piece No | Name | Material Kind Size | Req'd | Notes
1 | Base | C.I. | 1 | Cast with 2
2 | Journal Box | C.I. | 2 | Cast with 3
3 | Shaft | Steel 1 dia | 1 |
4 | Lever | W.I. 3/4 x 2 | 2 |
5 | Shifter Lever | W.I. 3/4 x 2 | 1 |
6 | Hand Lever | W.I. 1/4 x 2 | 1 |
7 | Link | W.I. 3/4 x 4 | 1 |
8 | Link | W.I. 3/4 x 4 | 1 |
9 | Pin | Steel 1/4 dia | 1 |
10 | Pin | Steel 1/4 dia | 2 |
11 | Pin | Steel 1/4 dia | 1 |
12 | Spacer | Steel 2 dia | 1 |
13 | Spacer | Steel 2 dia | 2 |
14 | #30 Woodruff Key | | 2 |
15 | #101 Woodruff Key | | 1 |
16 | Cotter Pin | 3/32 | 6 |
17 | Stud Bolt | 1/4 x 1 | 4 | Thread 3
18 | Set Screw | 1/4 x 1 | 3 |
THE PEERLESS ENGINEERING CO. GLENS FALLS, N.Y.
DETAILS OF SHIFTER FOR 12" FRICTION CLUTCH
SCALE 6"=1" Feb 23-1926
Drawn by
Traced by
Checked by
Approved
Chief Engr.
Drill 8
Drill 11
Drill 9
Drill 10
Drill 12
Keyway 3/16 wide 1/8 deep
Top 8
Top 9
Top 10
Top 11
Top 12
Core 3 Holes
Section on A-A
Section on BB
Section on CC
Section on DD
Section on EE
Section on FF
Section on GG
Section on HH
Section on JJ
Section on KK
Section on LL
Section on MM
Section on NN
Section on PP
Section on QQ
Section on RR
Section on SS
Section on TT
Section on UU
Section on VV
Section on WW
Section on XX
Section on YY
Section on ZZ

Fig. 546.—Clutch shifter details.

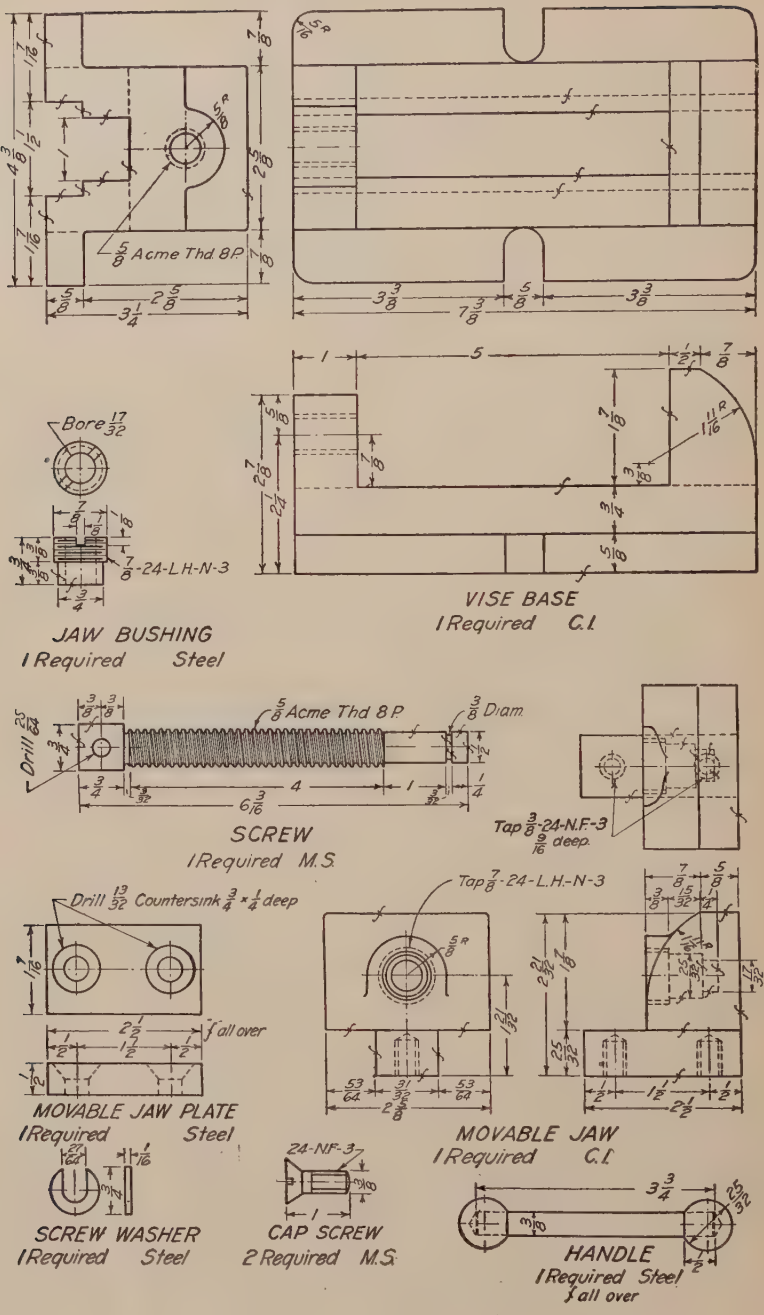

Fig. 547.—Bench drill vise.

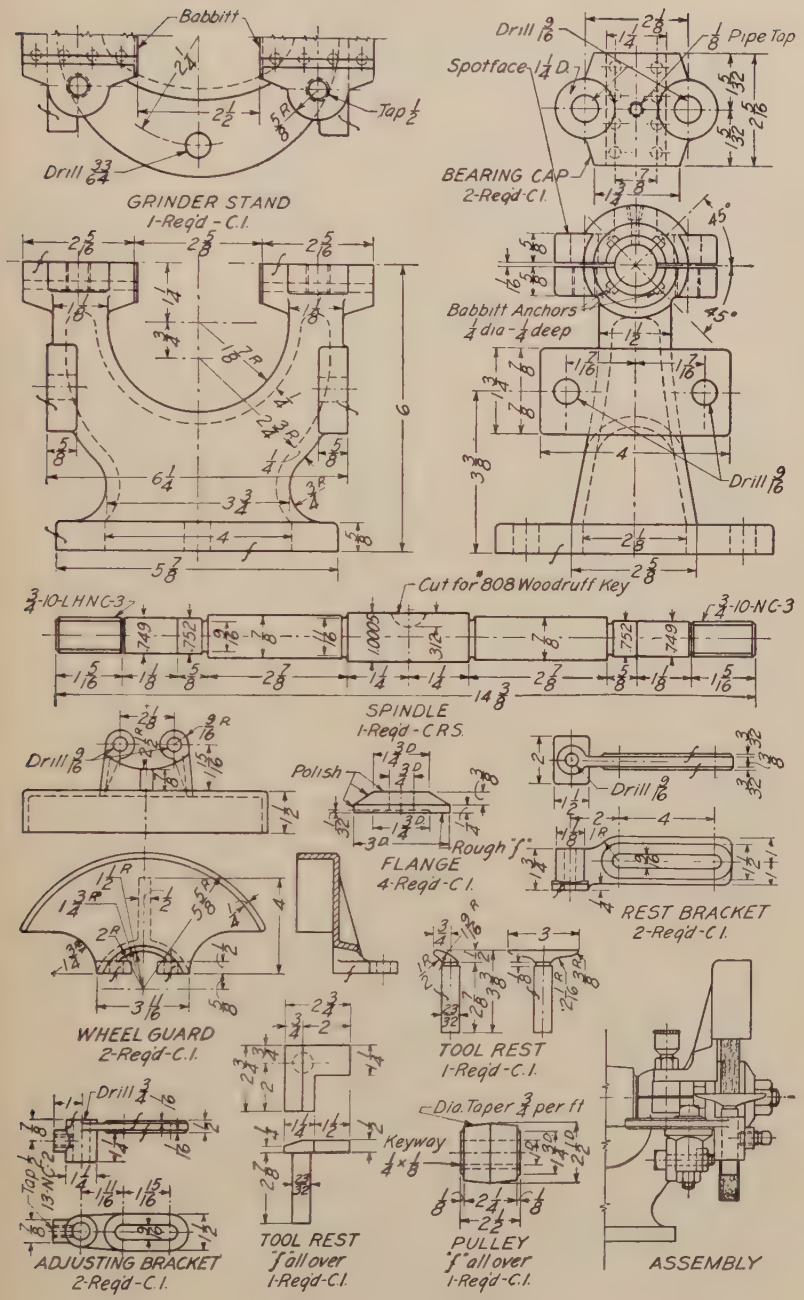

FIG. 548.—Bench grinder.

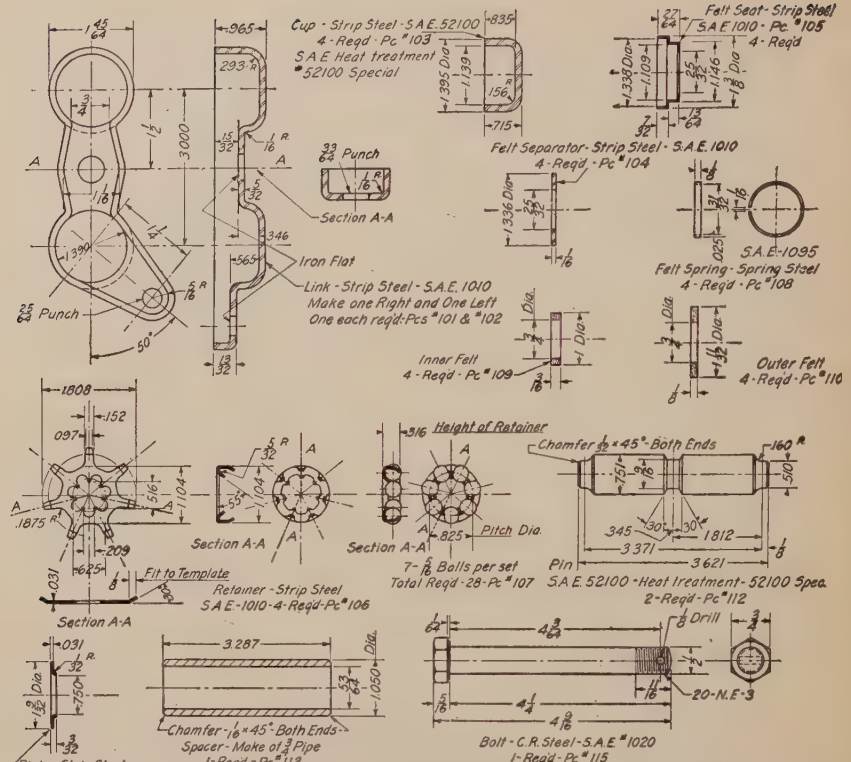
Cup - Strip Steel - S.A.E. 52100
4 - Reqd - Pc # 103
S.A.E Heat treatment
52100 Special
Felt Seat - Strip Steel
S.A.E 1010 - Pc # 105
4 - Reqd
Felt Separator - Strip Steel - S.A.E. 1010
4 - Reqd - Pc # 104
Punch
Section A-A
Iron Flat
Link - Strip Steel - S.A.E. 1010
Make one Right and One Left
One each reqd: Pcs # 101 & # 102
S.A.E-1095
Felt Spring - Spring Steel
4 - Reqd - Pc # 108
Inner Felt
4 - Reqd - Pc # 109
Outer Felt
4 - Reqd - Pc # 110
Height of Retainer
Chamfer 1/16 x 45° - Both Ends
Pitch Dia.
7 - 1/8 Balls per set
Total Reqd - 28 - Pc # 107
Pin
S.A.E. 52100 - Heat treatment - 52100 Spec.
2 - Reqd - Pc # 112
Fit to Template
Retainer - Strip Steel
S.A.E - 1010 - 4 - Reqd - Pc # 106
Drill
20 - N.F - 3
Bolt - C.R. Steel - S.A.E # 1020
1 - Req'd - Pc # 115
Plate - Strip Steel
S.A.E. 1010 - 4 - Reqd - Pc # 111
Spacer - Make of 3/4 Pipe
1 - Req'd - Pc # 113
1/8 Drill at each end
24 - N.F - 3
Chamfer 3/64 x 45°
Chamfer 1/64 x 45°
Stud Spacer - C.R. Steel - S.A.E. # 1020
1 - Req'd - Pc # 114

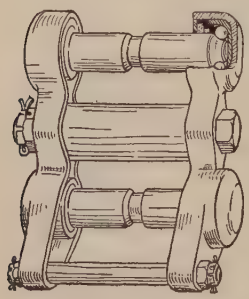

Piece No	Name	Quan	Mark	Notes
101	Link - Right	1	S.A.E. 1010	Strip Steel
102	Link - Left	1	S.A.E. 1010	Strip Steel
103	Cup	4	S.A.E. 52100	Strip Steel
104	Felt Separator	4	S.A.E. 1010	Strip Steel
105	Felt Seat	4	S.A.E. 1010	Strip Steel
106	Ball Retainer	4	S.A.E. 1010	Strip Steel
107	Ball	28	S.A.E. 52100	
108	Felt Spring	4	S.A.E. 1095	
109	Felt - Inner	4	Felt	
110	Felt - Outer	4	Felt	
111	Plate	4	S.A.E. 1010	Strip Steel
112	Pin	2	S.A.E. 52100	
113	Spacer	1	3/4 Pipe	
114	Stud Spacer	1	S.A.E. 1020	
115	Bolt	1	S.A.E. 1020	
116	1/2 S.A.E. Nut	1		Castellated - Purchased
117	3/8 S.A.E. Nut	2		Castellated - Purchased
118	1/8 x 1/8 Cotter Pin	3		Purchased

Fig. 549.—Ball-bearing spring shackle. (*Fafnir*).

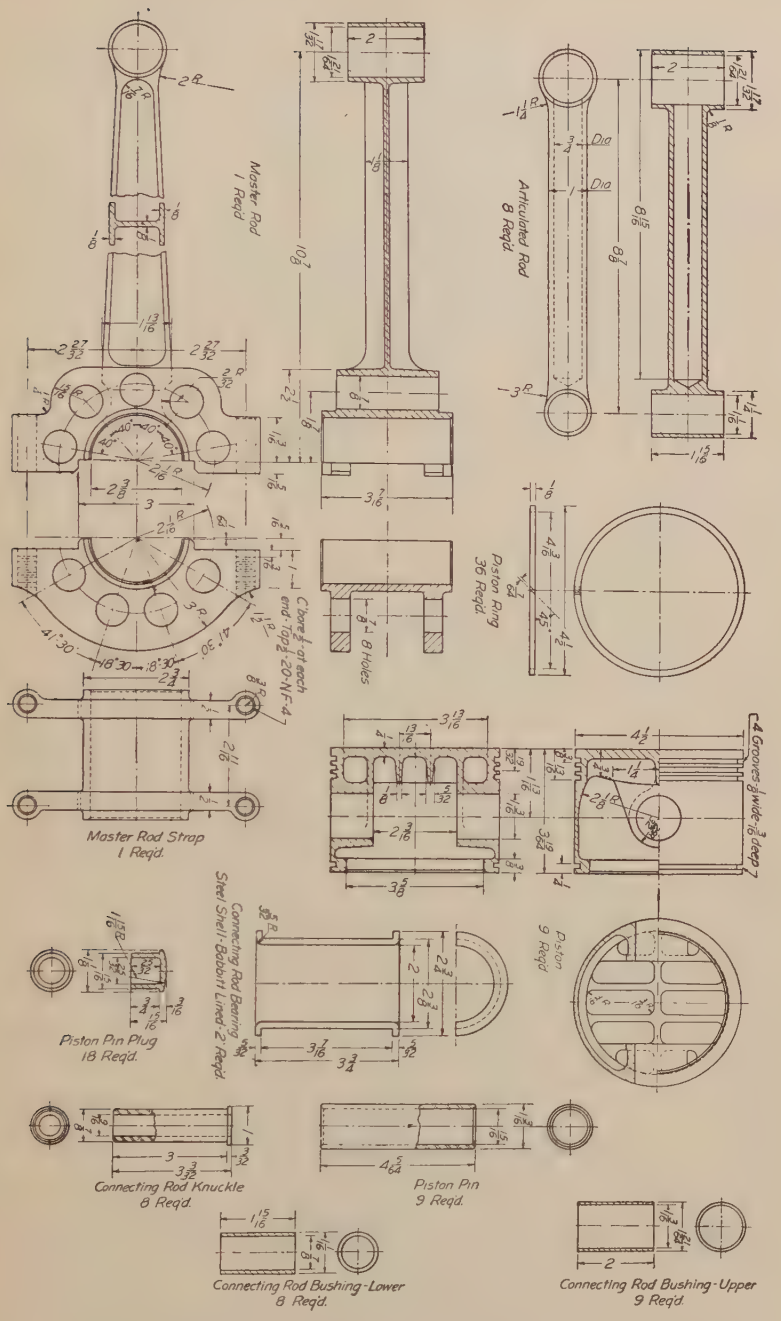

Fig. 550.—Piston and connecting rods, Wright Whirlwind engine.

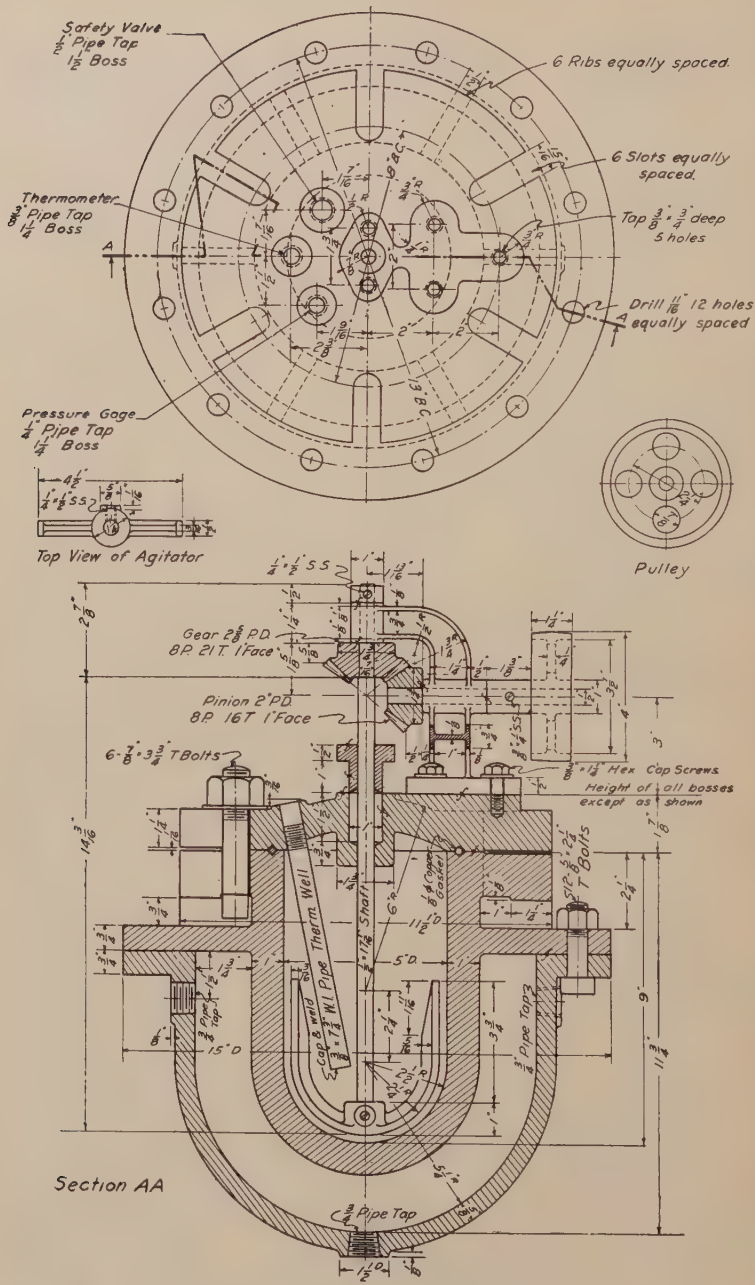

FIG. 551.—Steam jacketed autoclave.

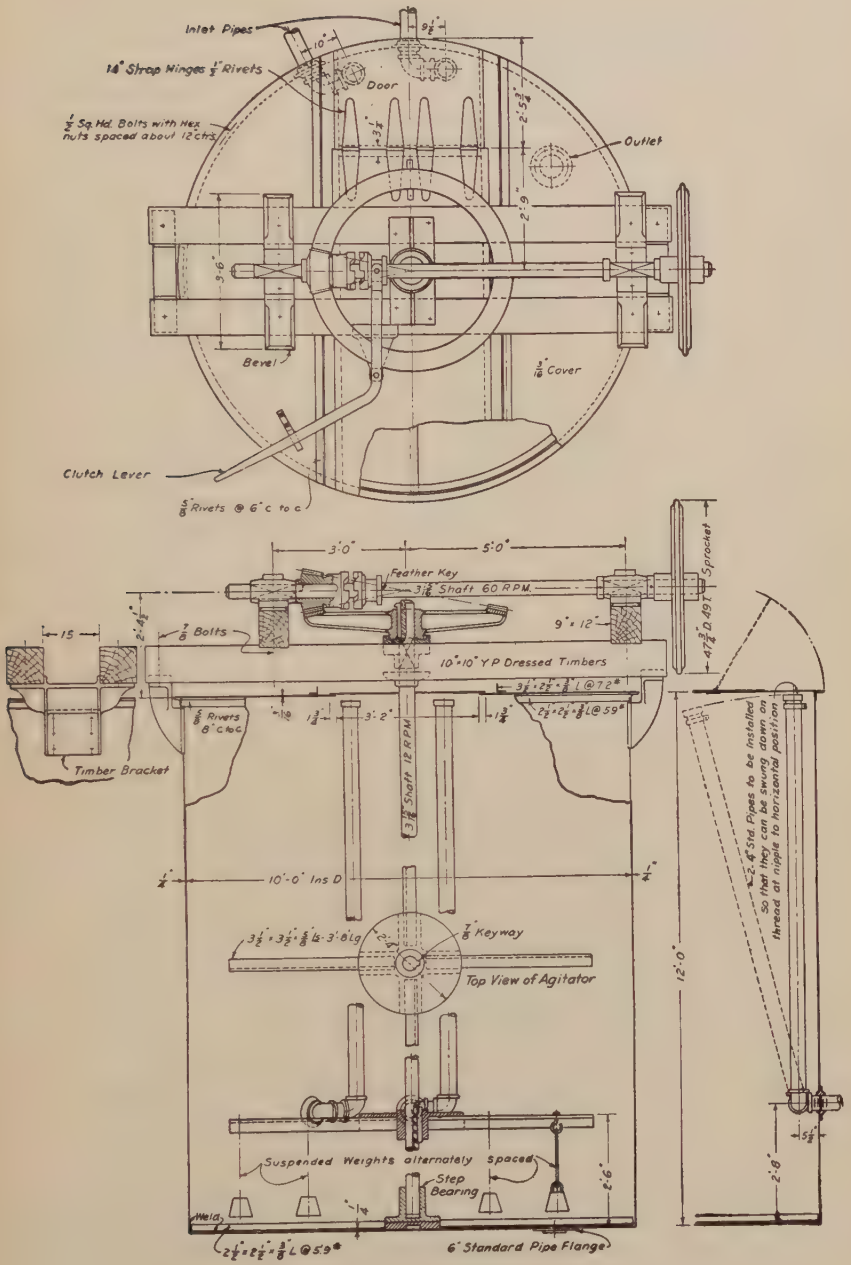

FIG. 552.—Alkali mixing tank.

as in Fig. 551 or without. Stirring devices may or may not be provided, depending upon the use. The autoclave shown has a 2.6 liter capacity and is designed for 750 lb. working pressure.

58. Fig. 551. Make an assembly drawing of an autoclave, 5-gal. capacity. Provide an agitator to revolve at 125 r.p.m. driven from motor running at 1200 r.p.m. Calculate size of pulley and bevel gears. Figure

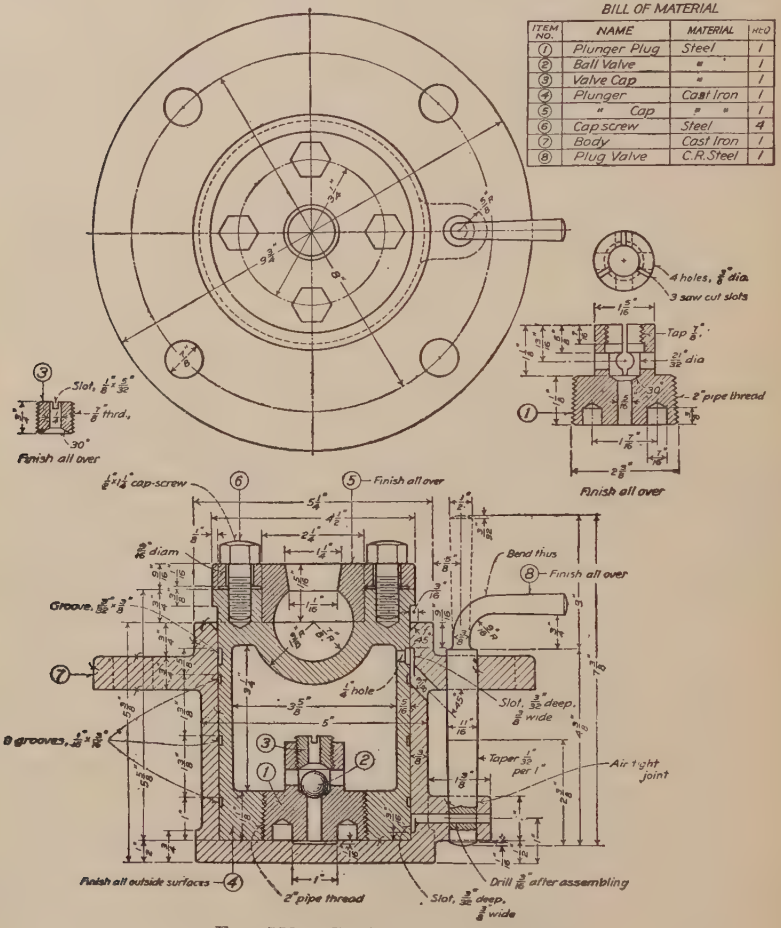
BILL OF MATERIAL
ITEM NO. | NAME | MATERIAL | REQ
1 | Plunger Plug | Steel | 1
2 | Ball Valve | " | 1
3 | Valve Cap | " | 1
4 | Plunger | Cast Iron | 1
5 | " Cap | " " | 1
6 | Cap screw | Steel | 4
7 | Body | Cast Iron | 1
8 | Plug Valve | C.R.Steel | 1
4 holes, ⅜" dia.
3 saw cut slots
Tap ⅜"
2" pipe thread
Finish all over
Slot, ⅛" × ⅝" × 30°
⅜" thrd.
Finish all over
⅜"×1¼" cap-screw
Finish all over
Bend thus
Finish all over
Groove, ⅛" × ⅛"
⅜" diam
⅜" hole
Slot, ⅜" deep, ⅝" wide
8 grooves, ⅛" × ⅛"
Taper ½" per 1"
Air tight joint
Finish all outside surfaces
2" pipe thread
Slot, ⅜" deep, ⅝" wide
Drill ⅜" after assembling

Fig. 553.—Corliss engine dash-pot.

wall thickness for 900 lb. pressure. Do not use a steam jacket. Provide openings in cover for safety valve, pressure gauge and thermometer well. Use T-bolts, calculating area, and refer to handbook for corresponding bolt size.

59. Fig. 551. Make detail drawings of autoclave from problem 58.

60. Fig. 552. Make an assembly drawing of the alkali-mixing tank. Figure net capacity in gallons. Calculate size of bevel gears for speeds as indicated. Make a complete bill of material for fabricating tank. Sides and bottom are welded.

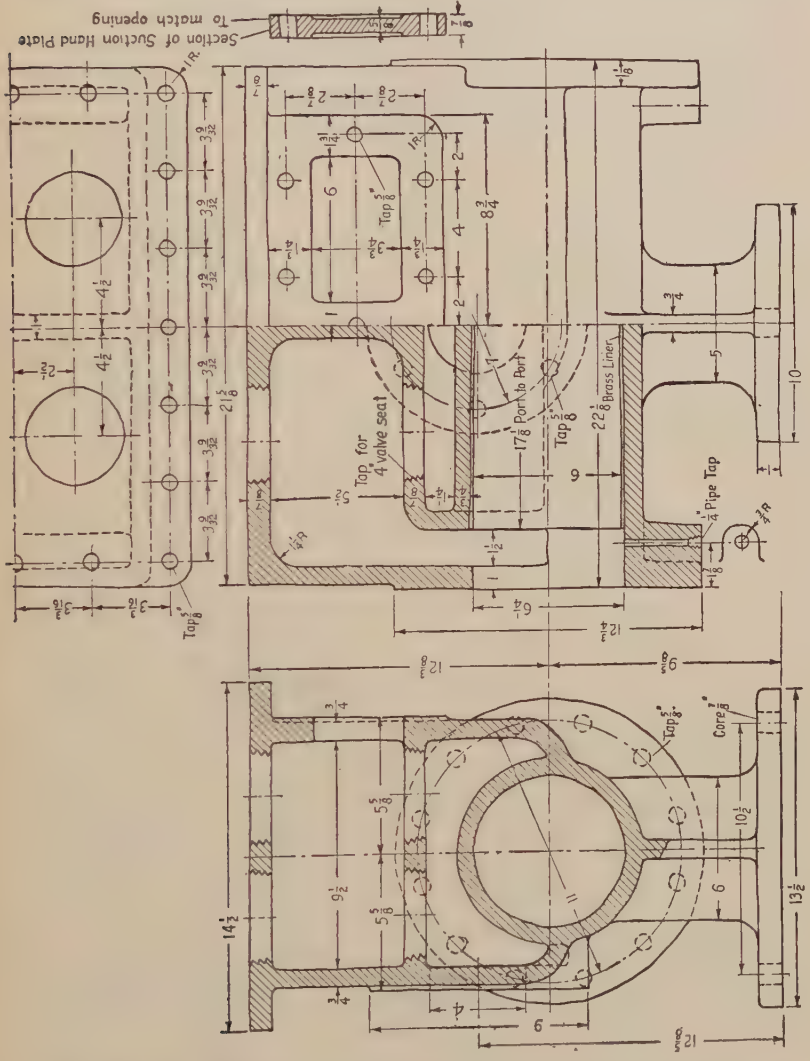

FIG. 554.—Pump cylinder.

61. Fig. 552. Make detail drawings of the transmission machinery used in problem 58.

62. Fig. 552. Make a detail drawing of the timber bracket.

63. Fig. 552. Make a detail drawing for the pipe flanges.

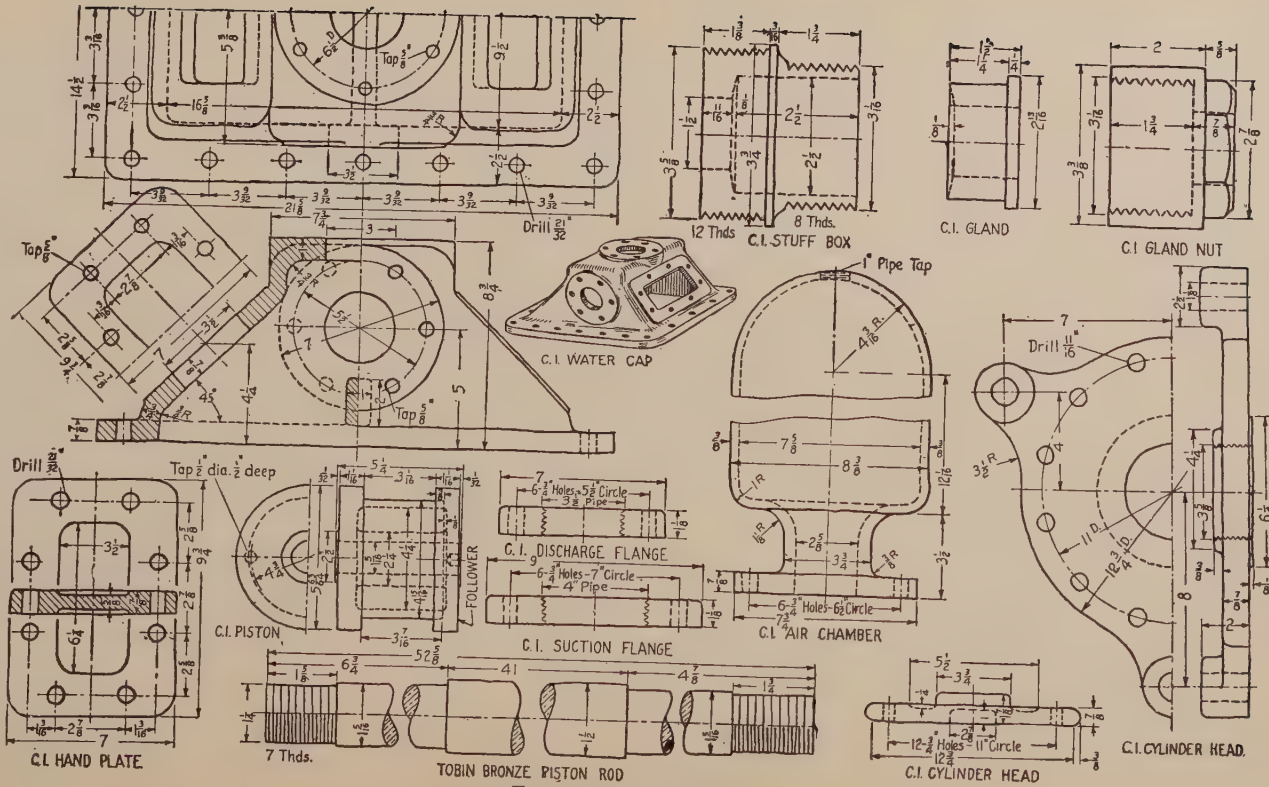

FIG. 555.—Pump details.

64. Fig. 552. Make an assembly drawing of an alkali-mixing tank similar to Fig. 552, with diameter 14′ − 0″ inside, and depth 10′ − 0″. Use one swing pipe instead of two. Joints to be riveted instead of welded. Laps on ¼″ plates to be 2″, laps on $\frac{3}{16}$″ plates to be 1¾″.

65. Make detail drawings for the mixing tank of problem 64.

66. Fig. 553. Make detail drawings for Corliss engine dash-pot.

67. Figs. 554, 555. Make complete detail drawings of 6″ × 12″ (6″ dia. 12″ stroke) water end of steam pump. Note that the figures shown are freehand sketches which are not to be copied, but used as sources of information from which to make the necessary choice of views, using sections or different views where desirable.

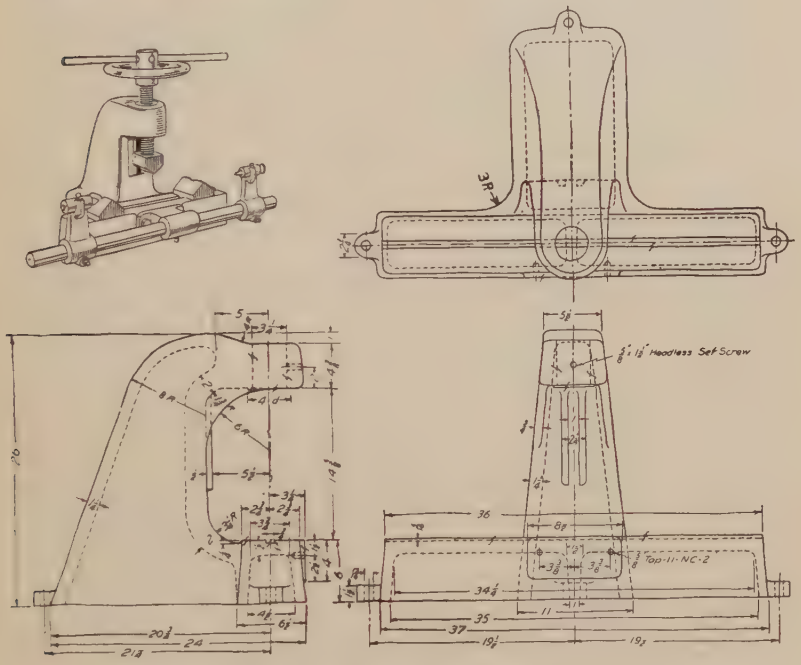

Fig. 556.—Shaft straightener.

68. Figs. 554, 555. Make sectional assembly drawing, two views, of 6″ × 12″ water end of pump. Choose sections which will tell the most about the pump. Draw the piston at left end of stroke just starting to the right, showing the proper valves open or closed. Details of the valve parts are given in Fig. 523, and may be drawn in this assembly either in full or in section.

69. Figs. 556, 557. Make an assembly drawing (exterior) of the bench press or shaft straightener. Supply necessary bolts, screws and pins. This may be made a shade line drawing if desired (see Chapter XX).

70. Fig. 558. The rectangular inset shows the detail sketch of a dumper clutch fork and a picture of the jig used in machining it. Sketches of the

parts of the jig are given in the figure. Make complete detail drawings for the jig, with bill of material and title.

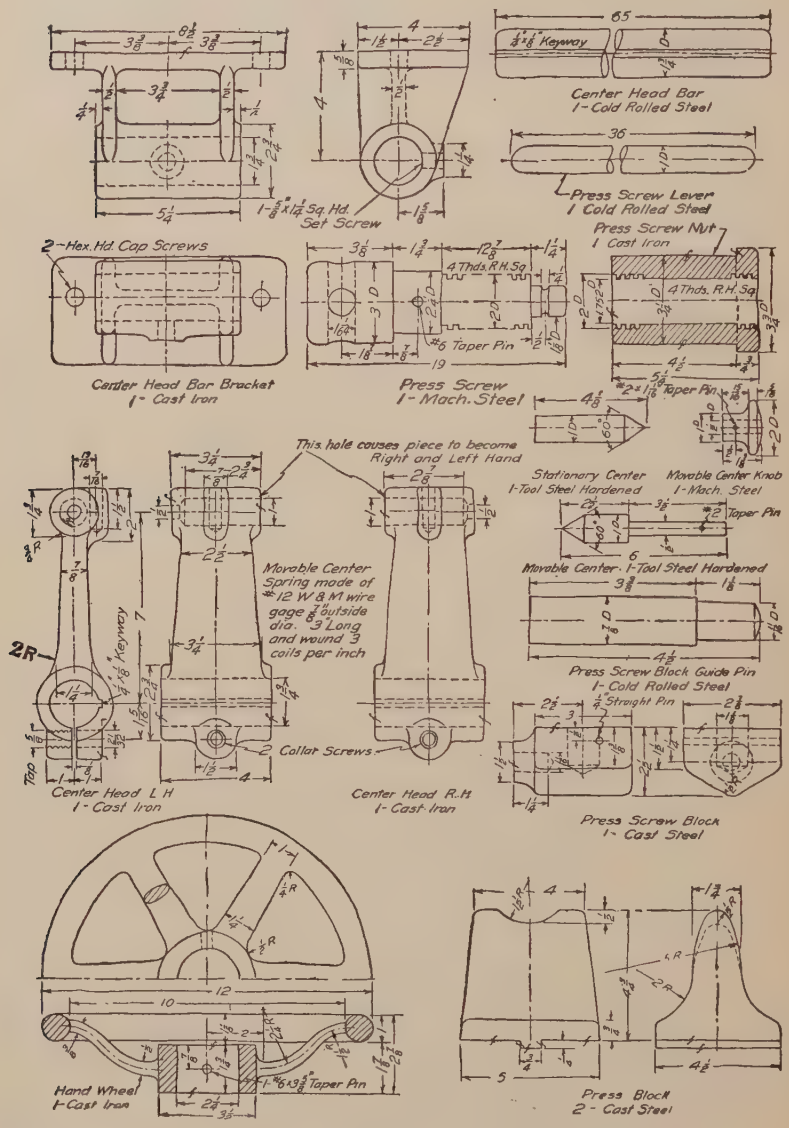

FIG. 557.—Shaft straightener details.

71. Fig. 558. Make complete assembly drawings, three views, of jig with clutch fork in place, giving "go together" dimensions. If problem 70 is omitted this assembly drawing should be fully dimensioned.

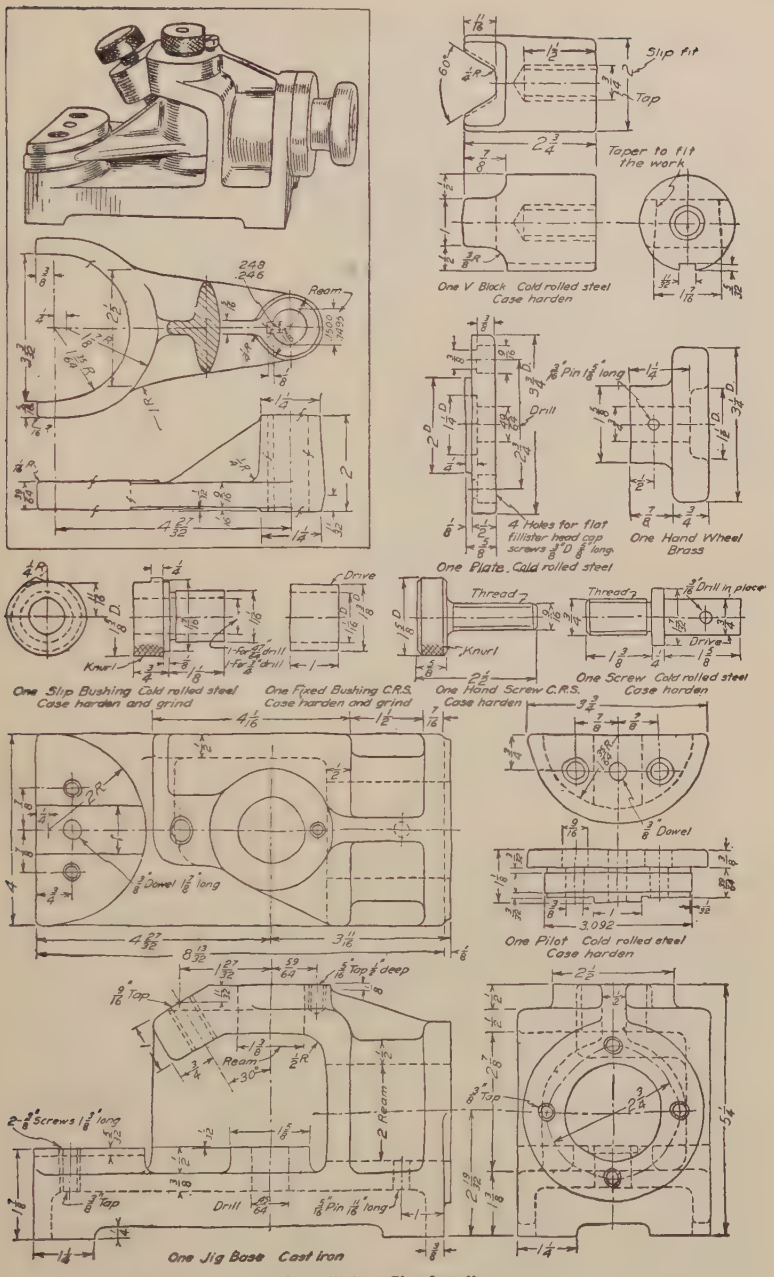
Slip fit
Tap
Taper to fit the work
One V Block Cold rolled steel Case harden
Ream
Drill
Pin
4 Holes for flat fillister head cap screws
One Plate Cold rolled steel
One Hand Wheel Brass
Drive
Knurl
Thread
Drill in place
One Slip Bushing Cold rolled steel Case harden and grind
One Fixed Bushing C.R.S. Case harden and grind
One Hand Screw C.R.S. Case harden
One Screw Cold rolled steel Case harden
Dowel
One Pilot Cold rolled steel Case harden
Screws
One Jig Base Cast iron

FIG. 558.—Jig details.

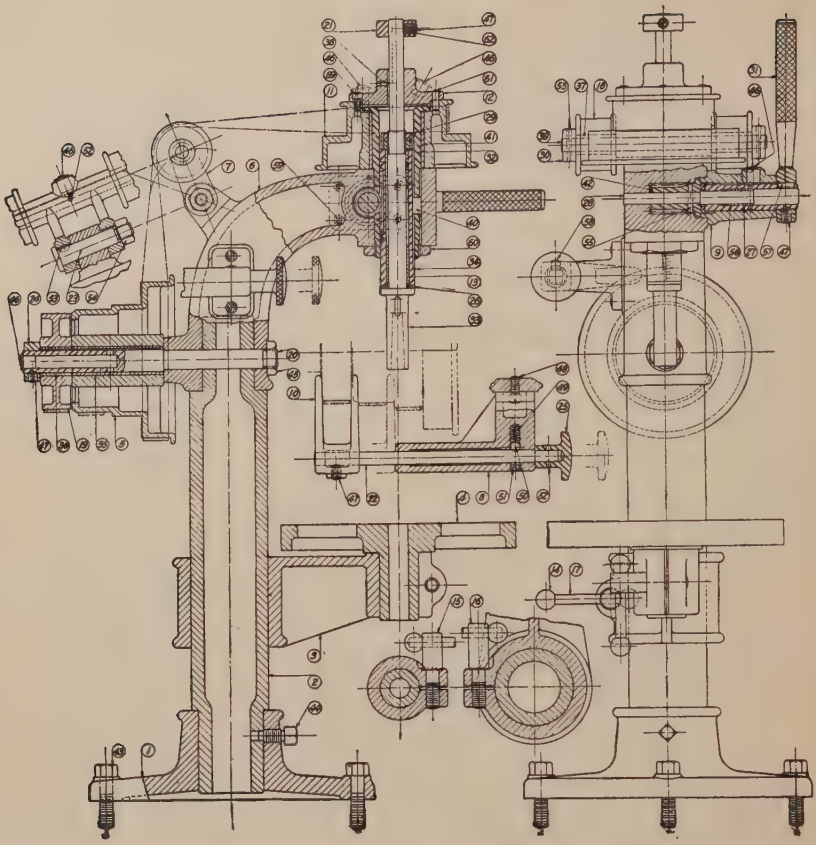

BILL OF MATERIAL

Pce No.	Name	Q	Mat.	Pce No.	Name	Q	Mat.
1	Base	1	C.I.	31	Hand Lever	1	Steel Forg.
2	Column	1	C.I.	32	Spindle Cone Sleeve	1	M.S.
3	Knee	1	C.I.	33	Spindle	1	45 S.S. Carbon S.
4	Table	1	C.I.	34	Spindle Sleeve	1	M.S.
5	Driving Cone	1	C.I.	35	Driving Cone Bush	1	Bro.
6	Head	1	C.I.	36	Loose Pulley Bush	1	Bro.
7	Idler Pulley Frame	1	C.I.	37	Idler Pulley Bush	2	Bro.
8	Belt Shifter Bracket	1	C.I.	38	Spindle Key	1	45 S.S. Carbon S.
9	Hand Lever Bracket	1	C.I.	39	Idler Pulley Shaft	1	C.R.S.
10	Belt Shifter	1	C.I.	40	Spindle Sleeve Key	1	C.R.S.
11	Spindle Cone	1	C.I.	41	Spindle Cone Bush	1	Bro.
12	Driving Flange	1	C.I.	42	Pinion	1	M.S.
13	Spindle Bushing	2	Bro.				
14	Clamp Handle Ball	4	C.R.S.				
15	Table Clamp	1	C.R.S.				
16	Knee Clamp	1	C.R.S.				
17	Clamp Handle	2	C.R.S.				
18	Idler Pulley	2	C.I.				
19	Loose Pulley	1	C.I.				
20	Driving Cone Shaft	1	C.R.S.				
21	Spindle Stop Collar	1	C.R.S.				
22	Belt Shifter Rod	1	C.R.S.				
23	Idler Pulley Frame Stud	1	M.S.				
24	Driving Cone Shaft Collar	1	C.R.S.				
25	Belt Shifter Knob	1	C.R.S.				
26	Spindle Washer	1	Red Fiber				
27	Hand Lever Clutch	1	M.S.				
28	Hand Lever Shaft	1	C.R.S.				
29	Spindle Nut	2	C.R.S.				
30	Idler Pulley Shaft Collar	2	C.R.S.				

Purchased Finished

Pce No.	Name	Q	Used on Name	Pce No.
43	½x2 Hex Cap Scrw	4	Base	1
44	½x1 Dog Pt Set Scrw	1	Base	1
45	⅜ Hex Nut ⅜ Thick	1	Driving Cone Shft	20
46	½ Ball & Spr'g Oiler	1	Driving Cone Shft	20
46	½ Ball & Spr'g Oiler	1	Idler Pulley Frame	7
46	½ Ball & Spr'g Oiler	1	Hand Lever Bracket	9
46	½ Ball & Spr'g Oiler	2	Driving Flange	12
47	⅜x½ Hdlss Set Scrw	1	Driving Shft Collar	24
47	⅜x½ Hdlss Set Scrw	1	Belt Shifter	10
47	⅜x½ Hdlss Set Scrw	1	Hand Lever	31
47	⅜x½ Hdlss Set Scrw	1	Spdle Stop Collar	21
48	5/16x¾ Fill Hd Cap Scrw	2	Belt Shifter Bracket	8
49	Spring 11/32 OD 1" Long	1	Belt Shifter Bracket	8
50	⅜ Steel Ball	1	Belt Shifter Bracket	8
51	13/32x¾ Cork Plug	1	Belt Shifter Bracket	8
52	#2 Taper Pin 1" Long	1	Belt Shifter Knob	25
52	#2 Taper Pin 1" Long	1	Idler Pulley Frame	7
53	#404 Woodruff Key	1	Idler Pulley Frame Std	23
54	½ Std Hex Nut	1	Idler Pulley Frame Std	23
55	#2 Taper Pin 1¼" Long	2	Idler Pulley Shft Collar	30
55	#2 Taper Pin 1¼" Long	1	Pinion	42
56	Spring 13/32 OD 2" Long	1	Hand Lever Clutch	27
57	#5 P&W Key	1	Hand Lever Clutch	27
58	⅛ Ball & Spr'g Oiler	1	Belt Shifter Brkt	8
59	¼x½ Fill Hd Cap Scrw	4	Hand Lever Brkt	9
59	¼x½ Fill Hd Cap Scrw	4	Driving Flange	12
60	1¾ Hex Nut ⅜ Thk 16 U.S.F. Thd	1	Spdle Cone Sleeve	32
61	¼x¾ Straight Pin	1	Driving Flange	12
62	3/32x⅜ Bss Plug	1	Spindle Stop Collar	21

FIG. 559.—Assembly and bill of material of bench drill.

72. Figs. 559, 560, 561, 562. Make complete detail drawings of bench drill, with title and bill of material. The driving cone is designed to run at 400 r.p.m. with corresponding spindle speeds of 300 and 630 r.p.m. The curves on head (piece 6) should be obtained by the method of Fig. 144.

73. Figs. 559 to 562. From detail drawings make assembly drawing of the bench drill, with piece numbers, bill of material and title.

74. Figs. 559 to 562. Redesign bench drill for ball-bearing installation in spindle and driving cones.

75. Figs. 559 to 562. Redesign bench drill as follows; spindle cone diameters $5\frac{7}{16}''$ and $7\frac{7}{16}''$, driving cone diameters $6\frac{5}{8}''$ and $8\frac{9}{16}''$. Note that this will change the position of the belt shifter bracket and the idler pulleys. Check for interference with the driving cone and knee.

76. Figs. 559 to 562. Redesign bench drill for a loose pulley speed of 350 r.p.m., and spindle speeds of 600 and 325.

Group IX. Cams and Gears

77. Make a drawing for a plate cam to satisfy the following conditions: On a vertical center line a point A is $\frac{7}{8}''$ above a point O, and a point B is $1\frac{3}{4}''$ above A. With center at O, revolution clockwise, the follower starts at A and rises to B with uniform motion during $\frac{1}{3}$ revolution, remains at rest $\frac{1}{3}$ revolution, and drops with uniform motion the last $\frac{1}{3}$ revolution, to the starting point. Diameter of shaft $\frac{3}{4}''$; diameter of hub $1\frac{1}{4}''$; thickness of plate $\frac{1}{2}''$; length of hub $1\frac{1}{4}''$; diameter of roller $\frac{1}{2}''$.

78. A broken spur gear has been measured and the following information obtained: Number of teeth, 33; outside diameter $4\frac{3}{8}''$; width of face $1''$; diameter of shaft $\frac{7}{8}''$; length of hub $1\frac{1}{4}''$. Make drawing of gear blank with all dimensions and information necessary for making a new gear. Dimensions not given above are to be obtained from drawing as it is made.

79. Make drawing for a spur gear. The only information available is as follows: Root diameter $7.3372''$; outside diameter $8.2''$; width of face $1\frac{7}{8}''$; diameter of shaft $1\frac{3}{8}''$; length of hub $2''$.

80. Fig. 563. Make complete detail drawings of reversing mechanism, with bill of material and title. The purpose of this device is to drive a shaft in either direction from a shaft at right angles to it which always revolves in the same direction. In the design shown, either shaft may be driver, the gear ratios being 3 to 2.

The two bevel pinions, pieces 6, are keyed to clutches, piece 4, which are bushed, (piece 5) and run free on the splined shaft. These bevel pinions are always in mesh with the gear, piece 7, and being on opposite sides of it, revolve on the splined shaft in opposite directions. The clutch, piece 3, is splined to its shaft and is free to shift axially into mesh with either of the two clutches, piece 4. This movement is controlled by the shifter arrangement—pieces 11, 12, 13, 14, 15 and 16. Three reamed tapered holes are provided in the pad on the top of the housing for the locking plunger, piece 15. This insures positive retention of the clutch in either neutral or driving positions.

81. Fig. 563. Make assembly drawing of reversing mechanism, with title and piece numbers.

82. Fig. 563. Redesign reversing mechanism for complete ball-bearing installation.

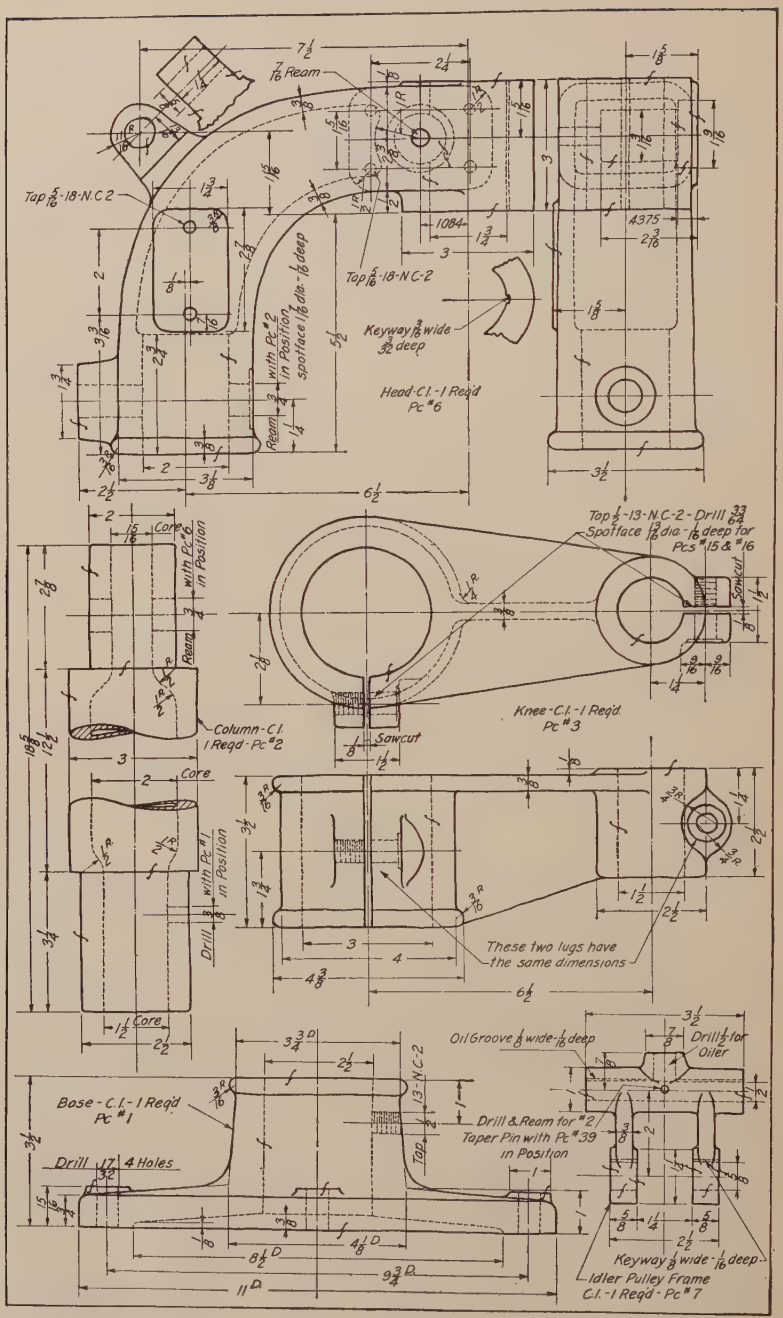
Top 5/16-18-N.C.2
7/16 Ream
Top 5/16-18-N.C.2
Keyway 3/16 wide 3/32 deep
Head-C.I.-1 Req'd Pc #6
Top 1/4-13-N.C.-2-Drill 23/64 Spotface 1/2 dia-1/16 deep for Pcs #15 & #16
Sawcut
Knee-C.I.-1 Req'd Pc #3
Column-C.I. 1 Req'd-Pc #2
Core
These two lugs have the same dimensions
Oil Groove 1/8 wide-1/16 deep
Drill 1/2 for Oiler
Base-C.I.-1 Req'd Pc #1
Drill 17/32 4 Holes
Drill & Ream for #2 Taper Pin with Pc #39 in Position
Keyway 1/8 wide-1/16 deep
Idler Pulley Frame C.I.-1 Req'd-Pc #7

FIG. 560.—Bench drill details.

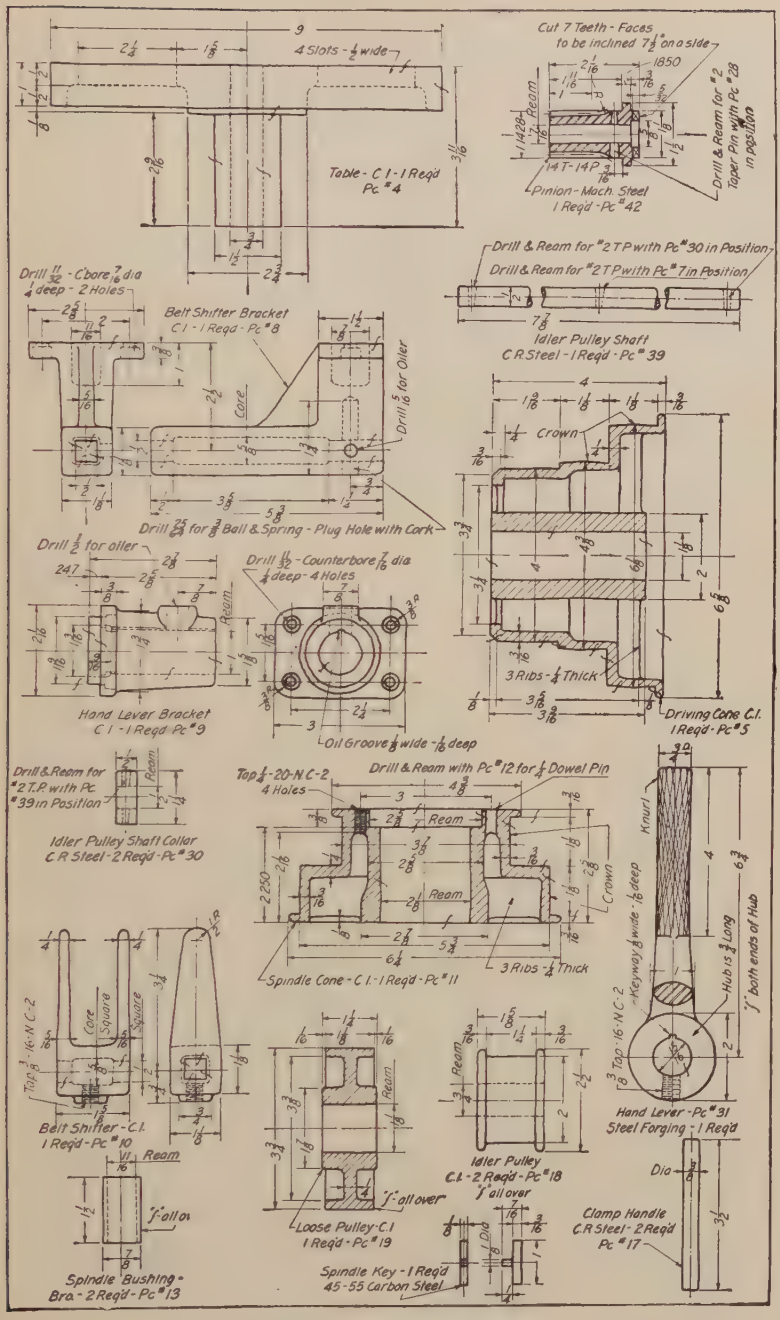
Table - C I - 1 Req'd Pc "4
4 Slots - ½ wide
Cut 7 Teeth - Faces to be inclined 7½° on a side
Pinion - Mach. Steel 1 Req'd - Pc "42
Drill & Ream for "2 T P with Pc "28 Taper Pin with Pc "28 in position
Drill & Ream for "2 T P with Pc "30 in Position
Drill & Ream for "2 T P with Pc "7 in Position
Idler Pulley Shaft C R Steel - 1 Req'd - Pc "39
Drill 11/32 - C'bore 7/16 dia ¼ deep - 2 Holes
Belt Shifter Bracket C I - 1 Req'd - Pc "8
Core
Drill 5/16 for Oiler
Drill 25/64 for ⅜ Ball & Spring - Plug Hole with Cork
Drill ½ for oiler
Drill ½ - Counterbore 7/16 dia ¼ deep - 4 Holes
Ream
Hand Lever Bracket C I - 1 Req'd Pc "9
Oil Groove ⅛ wide - 1/16 deep
Crown
3 Ribs - ¼ Thick
Driving Cone C.I. 1 Req'd - Pc "5
Drill & Ream for "2 T.P. with Pc "39 in Position
Idler Pulley Shaft Collar C R Steel - 2 Req'd - Pc "30
Top ¼ - 20 - N C - 2 4 Holes
Drill & Ream with Pc "12 for ¼ Dowel Pin
Spindle Cone - C I - 1 Req'd - Pc "11
Knurl
Keyway ⅜ wide - 1/16 deep
Hub is ¾ Long
⅜ bolt ends of Hub
Top ⅜ - 16 - N C - 2
Hand Lever - Pc "31 Steel Forging - 1 Req'd
Belt Shifter - C.I. 1 Req'd - Pc "10
Square
Idler Pulley C.I. - 2 Req'd - Pc "18
Loose Pulley - C.I 1 Req'd - Pc "19
Spindle Bushing - Bra. - 2 Req'd - Pc "13
Spindle Key - 1 Req'd 45-55 Carbon Steel
Clamp Handle C.R Steel - 2 Req'd Pc "17

FIG. 561.—Bench drill details.

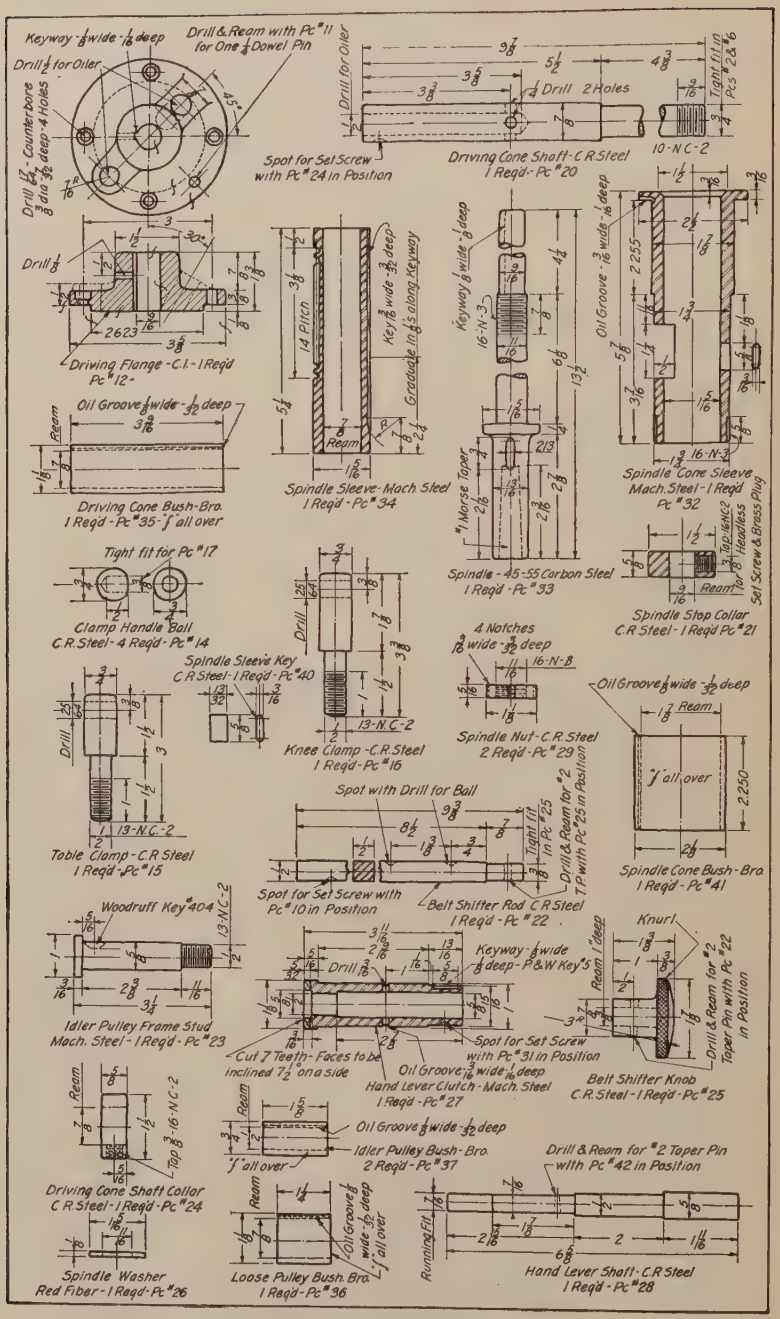
Keyway 1/8 wide 1/16 deep
Drill & Ream with Pc "11 for One 1/4 Dowel Pin
Drill 1/2 for Oiler
Drill 17/32 - Counterbore 3/8 dia 3/32 deep - 4 Holes
Drill for Oiler
1/4 Drill 2 Holes
Tight fit Pcs "2 & 6
10-N.C-2
Spot for Set Screw with Pc "24 in Position
Driving Cone Shaft - C.R. Steel 1 Reqd - Pc "20
Drill 1/8
Driving Flange - C.I. - 1 Reqd Pc "12
Keyway 1/8 wide 1/16 deep
16-N-3
Oil Groove 1/8 wide 1/32 deep
Ream
Driving Cone Bush - Bro. 1 Reqd - Pc "35 - 1" all over
Key 1/8 wide 3/32 deep
Graduate in 1/8's along Keyway
14 Pitch
Spindle Sleeve - Mach Steel 1 Reqd - Pc "34
Oil Groove - 1/16 wide 1/16 deep
Spindle Cone Sleeve Mach. Steel - 1 Reqd Pc "32
16-N-3
"1 Morse Taper
Spindle - 45-55 Carbon Steel 1 Reqd - Pc "33
Tight fit for Pc "17
Clamp Handle Ball C.R. Steel - 4 Reqd - Pc "14
Spindle Sleeve Key C.R. Steel - 1 Reqd - Pc "40
Drill
13-N.C-2
Knee Clamp - C.R. Steel 1 Reqd - Pc "16
4 Notches 1/8 wide 3/32 deep
16-N-3
Spindle Nut - C.R. Steel 2 Reqd - Pc "29
Spindle Stop Collar C.R. Steel - 1 Reqd Pc "21
Table Clamp - C.R. Steel 1 Reqd - Pc "15
Spot with Drill for Ball
Tight fit in Pc "25
Drill & Ream for "2 T.P. with Pc "25 in Position
Spot for Set Screw with Pc "10 in Position
Belt Shifter Rod C.R. Steel 1 Reqd - Pc "22
Oil Groove 1/8 wide 1/32 deep
Ream
1" all over
Spindle Cone Bush - Bro 1 Reqd - Pc "41
Woodruff Key "404
13-N.C-2
Idler Pulley Frame Stud Mach. Steel - 1 Reqd - Pc "23
Keyway 1/8 wide 1/8 deep - P&W Key's
Drill 1/8
Knurl
Ream 1" deep
Drill & Ream for "2 Taper Pin with Pc "22 in Position
Cut 7 Teeth - Faces to be inclined 7 1/2° on a side
Oil Groove 1/8 wide 1/16 deep
Hand Lever Clutch - Mach. Steel 1 Reqd - Pc "27
Spot for Set Screw with Pc "31 in Position
Belt Shifter Knob C.R. Steel - 1 Reqd - Pc "25
Ream
16-N-C-2
Top 3/8
Driving Cone Shaft Collar C.R. Steel - 1 Reqd - Pc "24
Oil Groove 1/8 wide 1/32 deep
Idler Pulley Bush - Bro. 2 Reqd - Pc "37
1" all over
Drill & Ream for "2 Taper Pin with Pc "42 in Position
Spindle Washer Red Fiber - 1 Reqd - Pc "26
Loose Pulley Bush. Bro. 1 Reqd - Pc "36
Oil Groove 1/8 wide 1/32 deep
Running Fit
Hand Lever Shaft - C.R. Steel 1 Reqd - Pc "28

FIG. 562.—Bench drill details.

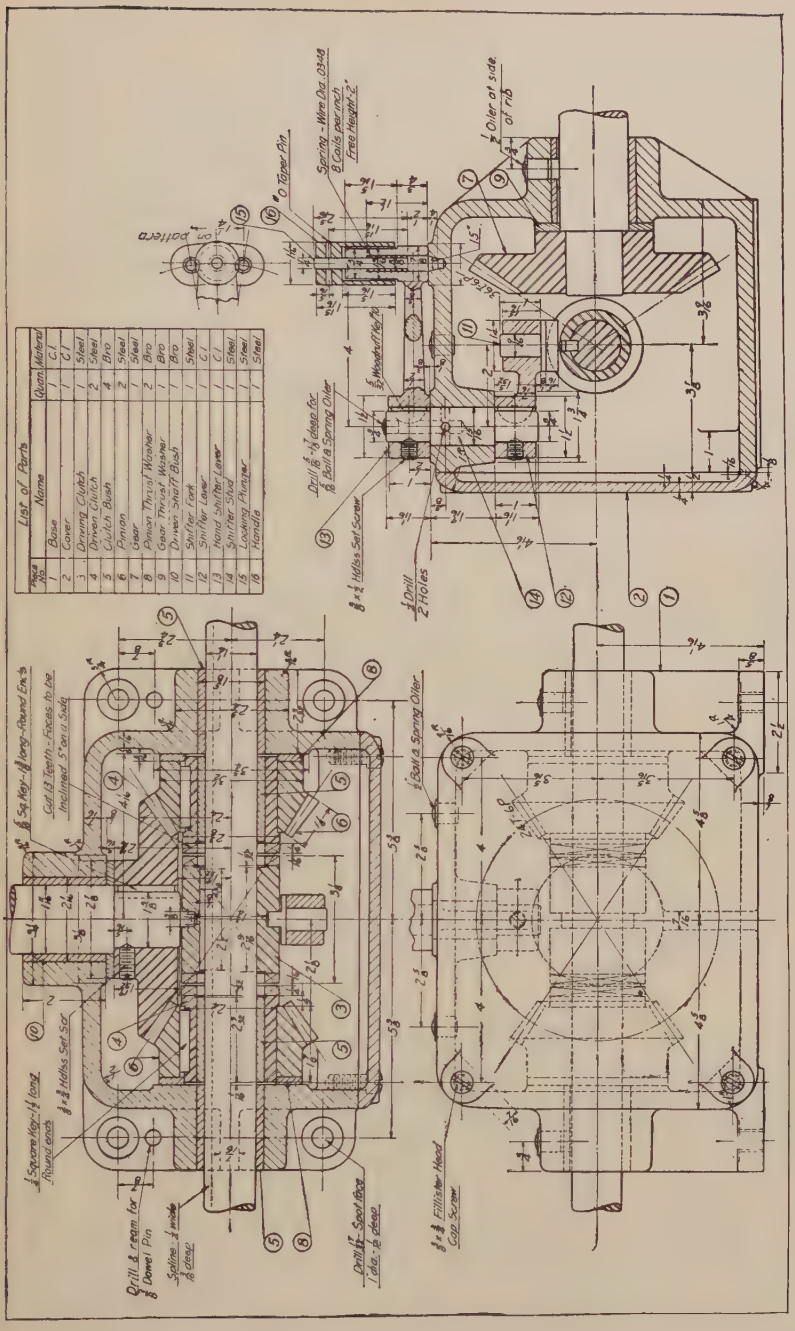
List of Parts
Pattern
Drill & ream for ⅜ Dowel Pin
Spline ¼ wide & deep
Drill ⅜ Spot face ⅛ deep, ⅛ deep
Drill ⅜ deep for ⅜ Ball & Spring Oiler
Drill 2 Holes
Oiler at side of rib
Taper Pin
Spring - Wire Dia .034 8 Coils per inch Free Height 2"
Fillister Head Cap Screw
Square Key ¼ long Round ends
Set Screw
Cut 13 Teeth - Faces to be Inclined 5° on a Side
Square Key ¼ long - Round Ends
Locks Spring Oiler

FIG. 563.—Reversing mechanism.

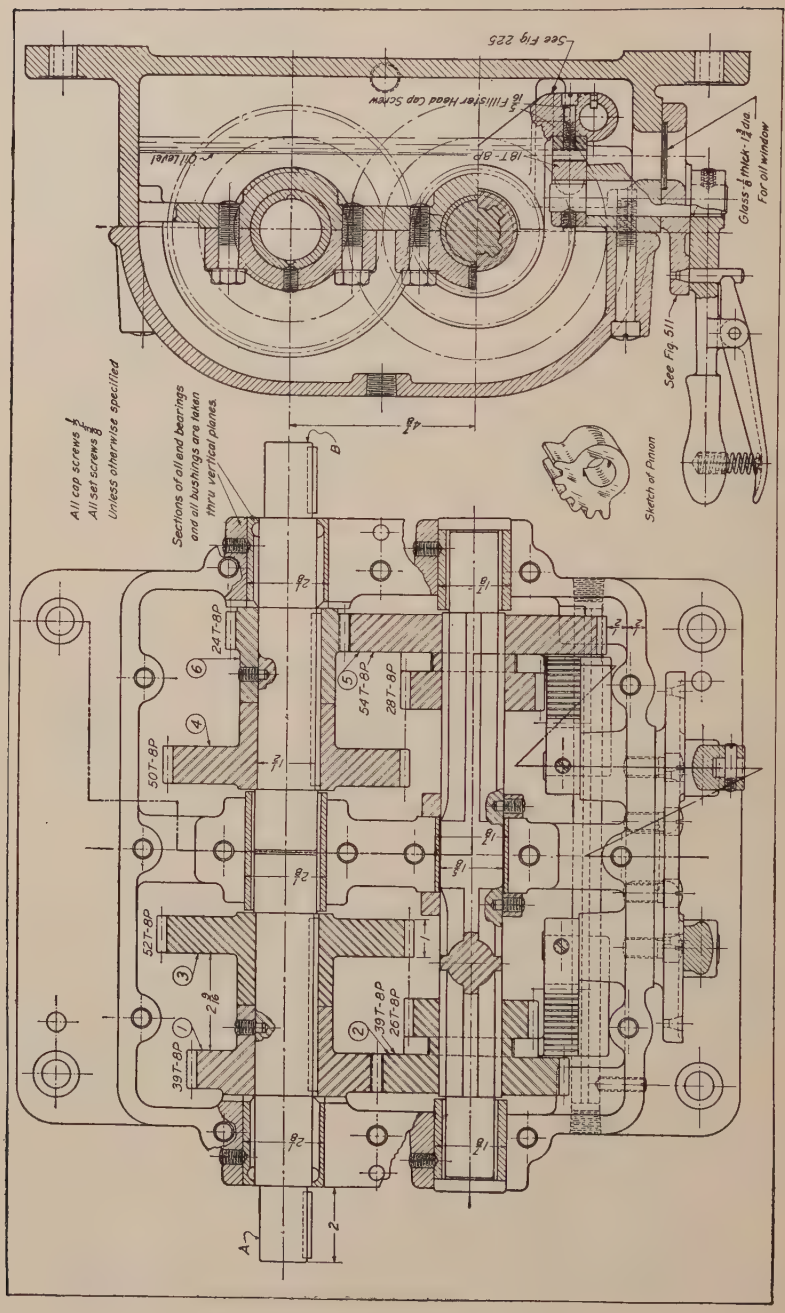

FIG. 564.—Transmission box.

83. Fig. 563. Redesign reversing mechanism, with gear ratio 7 to 4 instead of 3 to 2.

84 Fig. 563. Redesign reversing mechanism as follows: gear ratios 7 to 5 instead of 3 to 2; all thrust requirements to be met by ball-bearing installation. Spline shaft diameter to be 1″ instead of 1¼″. Keyed shaft to be 1⅛″ instead of 1⅜″. Use one centralized oiling system for the whole mechanism.

85. Fig. 563. Redesign reversing mechanism for splash lubrication. Provision must be made for retaining the oil at cover joint and where shafts enter the box. Do not neglect to provide filling and draining plugs and an oil level gage.

86. Fig. 563. Redesign reversing mechanism as follows: Make pieces 3, 4 and 6 in one piece, and spline to shaft as in present design. This will dispense with two bushings (piece 5) and also the clutch teeth. This new piece is called a double bevel gear, and should be made long enough to be shifted axially in and out of mesh with gear, piece 7. Be sure to provide a neutral position. This design requires the thrust of the bevel gears to be taken by the shifter fork, which should be redesigned to take this load. It is suggested that a double fork of bronze be used with a strengthened locking plunger.

87. Fig. 564. Four-speed machine tool transmission box. The power comes in on shaft *A* at a constant rate and leaves on shaft *B* at a rate depending on the positions of the sliding gears. Only the top view and end in section are given. The detail drawing of the gear shifter bracket is shown in Fig. 511, and the shifter fork in Fig. 225. Make a complete assembly drawing showing the front, top and end views.

88. Fig. 564. Make complete working details with bill of material from the design of problem 87.

89. Fig. 564. Redesign problem 87 for ball bearing installation.

90. Fig. 564. Redesign problem 87 for speed ratios of 1 to 1, 1 to 1.228, 1 to 1.437 and 1 to 1.776 making pieces 1 and 6 duplicates. Shaft centers to remain as in problem 87. Note that in the required set of speeds the ratio between each successive speed is approximately a constant (1.2).

91. Fig. 564. Redesign problem 87 using gears ¾″ wide, shafts *A* and *B* to be 1⅜″ in diameter. Omit center bearing for jack shaft but leave its diameter unchanged.

Electrical Problems

The following problems, in six groups, include working drawings, and diagrammatic drawings, a few of which will require the use of handbooks, and catalogues of electrical equipment. Tables of electrical symbols will be found in the Appendix.

Group X. Electrical Equipment

92. Fig. 565. Make a complete detail drawing of the bronze bus bar terminal. Show the galvanized bolts with lock washers in place.

93. Fig. 566. Make a complete detail drawing of the bronze bus bar terminal. Show the galvanized bolts with lock washers in place.

94. Fig. 567. Make a detail drawing of the cross-arm cable terminal bracket.

95. Fig. 568. Make a detail drawing of the telescope wall bracket. Fixture may be selected from catalogue and shown attached.

96. Make a detail drawing of a single-light cast-iron standard 12′ high, to be used for street lighting. Octagonal base 8″ high and 20″ across flats. Four ¾″ foundation bolts. Supply with a tapered octagonal lighting unit 30″ high from base to point.

97. Make a detail drawing for a two-light cast-iron standard for street lighting. Other specifications same as problem 96.

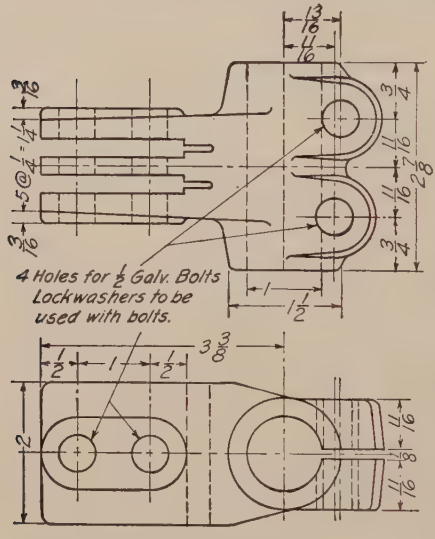

Fig. 565.—Bus bar terminal.

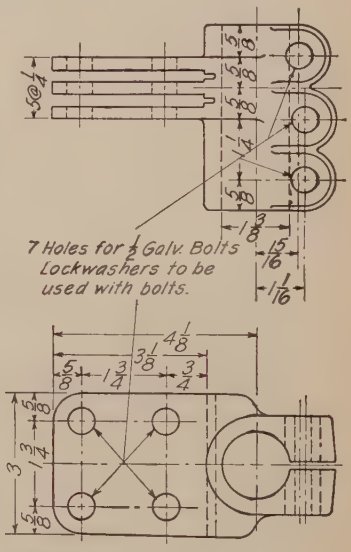

Fig. 566.—Bus bar terminal.

Group XI. Substations

98. Fig. 569. Make a detail drawing of the standard line construction 2300 V. substation (two-pole platform type). Transformers to be 100 kv.-a. capacity, three phase, closed delta, 60 cycle, 2300 V.—230 V. Weight 1040 lbs. each. All ⅝″ bolt heads and nuts bearing against wood to have 2¼″ square washers. Ground wire attached to pole with 1″ galvanized staples.

99. Fig. 569. Make a material list for substation.

100. Fig. 569. Make a detail drawing of the instrument transformer box. Outside dimensions 2′ − 6″ × 15″ × 4′ − 6″. Box is to be framed with 1½″ × 1½″ Y.P. and to be covered with ⅞″ tongued and grooved Y.P. Painted two coats of weather-proof paint. Top covered with galvanized iron. Hasp and hinges brass.

101. Fig. 569. Make a detail drawing of the primary meter box. Outside dimensions 2′ − 0″ × 12″ × 3′ − 6″. Other specifications same as problem 100.

102. Fig. 569. Make a detail drawing of the standard transformer platform. Use two 10″ channels at 15.3 lb., two 2″ × 2″ × ¼″ angles for ties, 2″ × 10″ × 5′ − 0″ creosoted Y.P. flooring laid open.

Group XII. Switchboards

103. Fig. 570. Make a complete wiring diagram for the switchboard. Note that the symbols in Fig. 570 are semi-pictorial.

104. Fig. 570. Make a detail drawing of the frame for panel mounting. Brace to wall 4′ − 0″ back of switchboard.

105. Fig. 570. Make a detail drawing of switchboard panel without instruments.

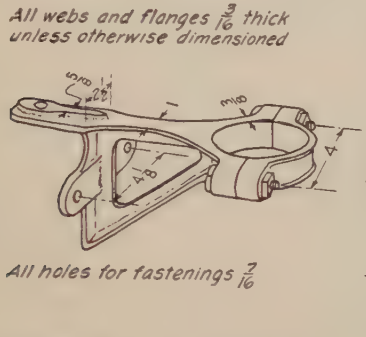

Fig. 567.—Terminal bracket.

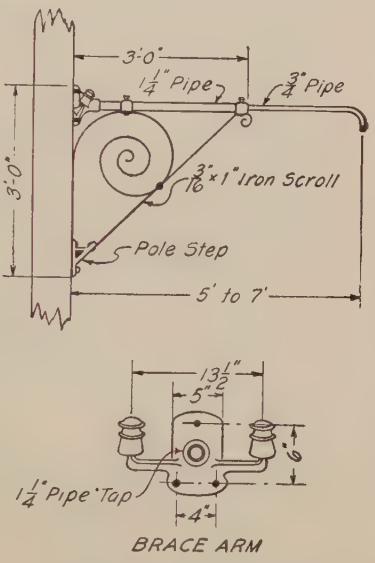

Fig. 568.—Wall bracket.

106. Fig. 570. Make a detail drawing of switchboard showing instruments, rheostats, lights and switches in place.

107. Fig. 570. Make a detail drawing of the large knife switch.

Group XIII. Motors

108. Fig. 571. Make a detail drawing of the slide rails for a 20-hp. motor.

109. Fig. 571. Make a detail drawing of the bed plate for a 5-hp. motor.

110. Fig. 571. Make an outline drawing, top, front and side views, of a 10-hp. motor mounted on a bed plate.

111. Fig. 571. Make a detail drawing of a platform for a 15-hp. motor support, to be fastened with through bolts to a 13″ brick wall. Use 6″ channels for frame, 2½″ × 3½″ × 5/16″ angles for diagonal braces, and 5/16″ plate for gussets.

112. Fig. 571. The center line for a 30-hp. motor shaft is 2′ − 0″ above the floor. Draw plan and elevation of a concrete base with foundation bolts and motor in place.

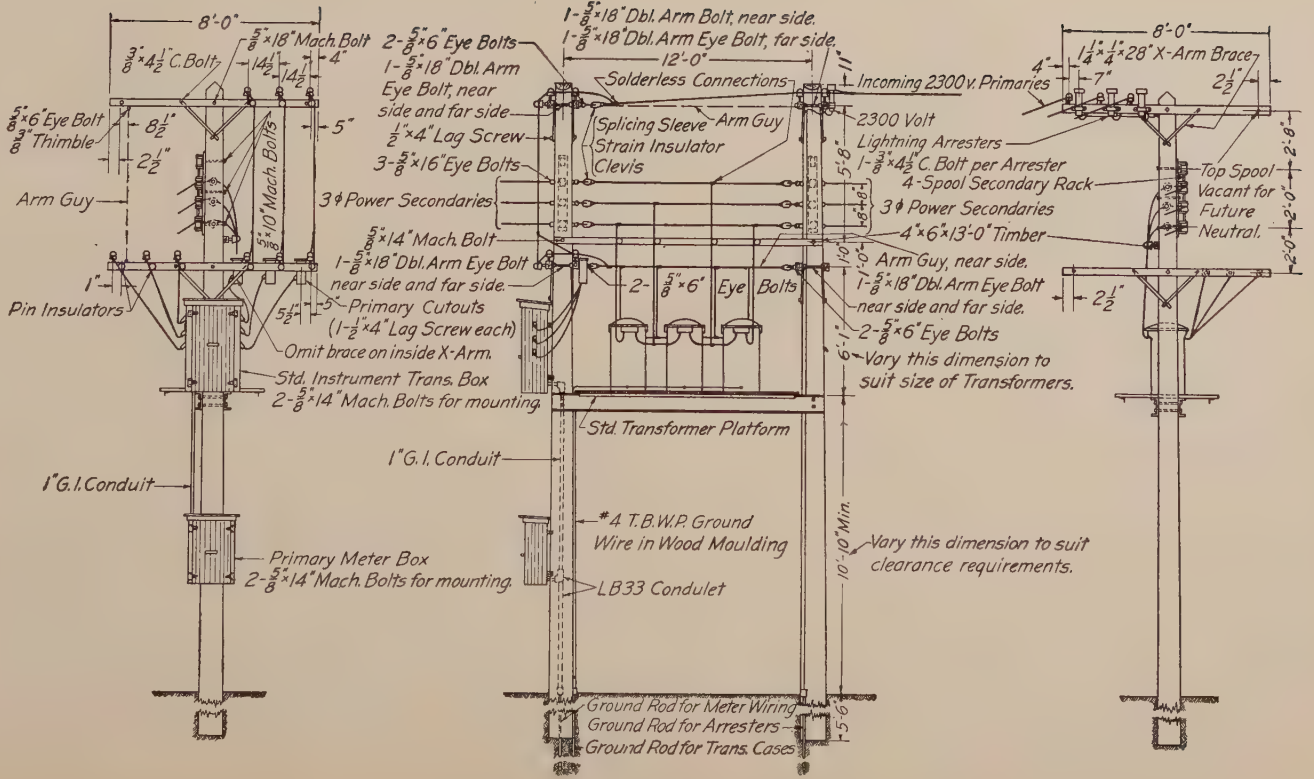

Fig. 569.—Two-pole platform-type substation.

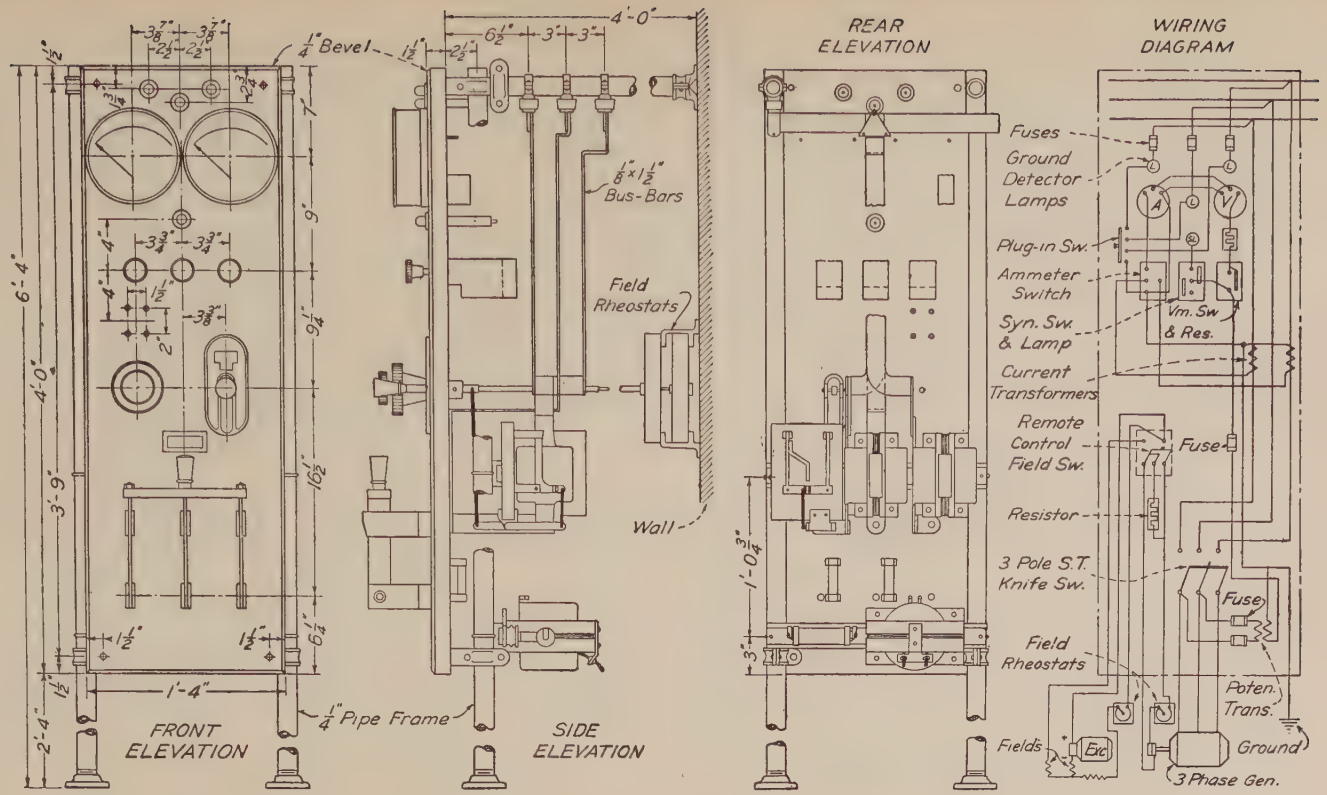

Fig. 570.—Switchboard.

OUTLINE DIMENSIONS – 220-440-550 VOLT, 3φ, 60 cycle Motors, 4 Pole @ 1750 R. P. M. Bedplate or Slide-Rails

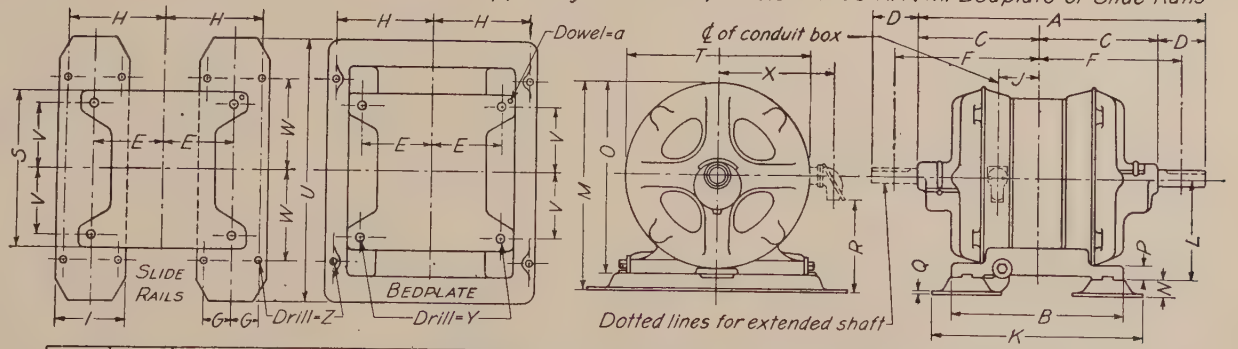

Horse Power	Shaft Dia	Keyway Width	Keyway Depth	Keyway Lgth	Foot-groove Width	Foot-groove Depth	Max. Trvl on Base	Outline Dimensions – given above (Inches.) A	B	C	D	E	F	G	H	I	J
3	1	1/4	3/32	2 5/16	1	5/32	2 1/4	18 9/16	11	7 1/2	3 9/16	4 1/2	9 5/16	—	6 1/4	—	2 1/2
5	1 1/4	5/16	1/8	2 7/8	1 5/32	7/32	2 1/2	19 5/32	12	7 3/4	3 21/32	4 3/4	9 9/16	—	6 7/8	—	2 7/16
7 1/2	1 1/4	5/16	1/8	2 7/8	1 5/32	7/32	2 1/2	22 5/32	15	9 1/4	3 21/32	6 1/4	11 1/16	—	8 3/8	—	3 15/16
10	1 5/8	3/8	1/8	4 1/2	1 5/32	7/32	2 1/2	25 3/4	15	10 5/32	5 7/16	6 1/4	12 7/8	—	8 3/8	—	3 15/16
15-20	1 7/8	7/16	5/32	5 5/8	1 1/16	7/32	4 1/8	34 5/16	15 5/8	13 13/16	6 11/16	6 5/8	17 5/32	2 1/16	8 11/16	5 3/8	4 1/4
25	1 7/8	7/16	5/32	5 3/4	1 1/4	9/32	4	34 13/16	15	14 1/16	6 11/16	6 1/4	17 13/32	2 3/8	8 5/8	6 1/4	3 7/8
30	1 7/8	7/16	5/32	5 3/4	1 1/4	9/32	4	35 13/16	17	14 9/16	6 11/16	7 1/4	17 29/32	2 3/8	9 5/8	6 1/4	4 7/8

HP	K	L	M	N	O	P	Q	R	S	T	U	V	W	X	Y	Z	a
3	13 1/2	6 1/4	13 5/16	1 3/16	12 1/8	1 1/8	3/16	3 7/16	12	11 3/4	16 3/4	4 3/16	5 3/4	8 9/16	5/8	1/2	7/16
5	14 3/4	7 3/8	15 3/4	1 3/8	14 3/8	1 1/4	3/16	4 3/4	15	14	20	5 7/16	7 3/8	9 5/8	3/4	5/8	7/16
7 1/2	17 3/4	7 3/8	15 3/4	1 3/8	14 3/8	1 1/4	3/16	4 3/4	15	14	20 1/4	5 7/16	7 1/8	9 5/8	3/4	5/8	7/16
10	17 3/4	7 3/8	15 3/4	1 3/8	14 3/8	1 1/4	3/16	4 3/4	15	14	20 1/4	5 7/16	7 1/8	9 5/8	3/4	5/8	7/16
15-20	18 5/8	9	19 1/16	1 7/16	17 5/8	1 1/2	1/4	6 7/16	18 1/8	17 1/4	26	6 1/16	10	11 1/4	3/4	3/4	1/2
25	18 3/4	10 3/4	22 3/4	1 5/8	21 1/8	1 5/8	5/16	8 3/8	20 1/4	20 3/4	31 1/4	7 1/16	12	12 15/16	7/8	7/8	1/2
30	20 3/4	10 3/4	22 3/4	1 5/8	21 1/8	1 5/8	5/16	8 3/8	20 1/4	20 3/4	31 1/4	7 13/16	12	12 15/16	7/8	7/8	1/2

FIG. 571.—Motor dimension sheet.

113. Fig. 571. Two 8″ channels 3′ − 0″ back to back (floor beams) are to be used for framing in a structural steel motor support for a 25-hp. motor. Make a detail drawing of the support in place.

Group XIV. Wiring

114. Figs. 600, 601 and 602. Make outline plan drawings of the house, scale ¼″ = 1′ − 0″. Add the wiring plans to each, using the standard wiring symbols. House to be supplied with three-phase, 60-cycle, 110-volt overhead service at the rear.

115. Make a diagram showing the proper meter connections for service in problem 114.

116. Make a material list for roughing-in wiring for the house in problem 114. All wiring to be done in BX cable with boxes and appliances which are used with it.

117. Make a material list of the fixtures, switches and receptacles for problem 114.

118. Make similar wiring diagrams for one of the house plans of Fig. 615.

Group XV. Radio

119. Select a popular radio hook-up and make a complete wiring diagram of the circuit, using symbols shown in Fig. 729.

120. Make a complete working drawing of a wood console cabinet for mounting the assembled radio of problem 119.

121. Make a bill of material for the radio and cabinet of problems 119 and 120.

CHAPTER XIII

Technical Sketching

229. From its long use in connection with art the word "sketch" has come to suggest the impression of a free or incomplete or careless rendering of some idea, or some mere note or suggestion for future use. This meaning is entirely misleading and wrong in the technical use of the word. A sketch is simply a working drawing made freehand, without instruments, the quick expression of graphic language, but in information adequate and complete.

230. Purpose.—So necessary to the engineer is the training in freehand sketching, it might almost be said in regard to its importance that the preceding twelve chapters have all been in preparation for this one. Such routine men as tracers and detailers may get along with skill and speed in mechanical drawing, but the designer must be able to sketch his ideas with a sure hand and clear judgment. In all mechanical thinking in invention, all preliminary designing, all explanation and instructions to draftsmen freehand sketching is the mode of expression.

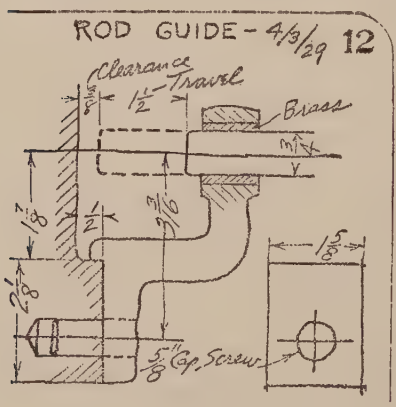

Fig. 572.—A note book sketch.

It represents the mastery of the language, gained only after full proficiency in mechanical execution, and is the mastery which the engineer, and inventor, designer, chief draftsman, and contractor, with all of whom time is too valuable to spend in mechanical execution, must have. It is the chief engineer's method of design.

It may be necessary to go a long distance from the drawing room to get some preliminary information and the record thus

obtained would be valueless if any detail were missing or obscure. Mistakes or omissions that would be discovered quickly in making an accurate scale drawing may easily be overlooked in a freehand sketch, and constant care must be observed to prevent their occurrence. A part of a page from a sketch book is shown in Fig. 572 giving the essential information for the design of a guide to be added to a machine.

Sometimes, if a piece is to be made but once a sketch is used as a working drawing and afterward filed.

The use and value of sketching is not confined to the engineering staff. A service man, for example, out on a trouble-giving machine may have to make a sketch, or a salesman in his daily report may need to send back sketches, perhaps of a customer's product, or even of some point of advantage in a competitor's machine.

231. Practice.—The best preliminary training for this work is the drawing in the public schools, training the hand and eye to see and represent form and proportion. Those who have not had this preparation should practice drawing lines with the pencil, until the hand obeys the eye to a reasonable extent.

Sketches are made in orthographic, axonometric, or perspective drawing, depending upon the use which is to be made of them. Sketches of machine parts to be used in making working drawings, etc., would be made in orthographic; explanatory or illustrative sketches might be made either in orthographic or in one of the pictorial methods.

The best practice is obtained by sketching from castings, machine parts, or simple machines, and making working drawings from the sketches without further reference to the object. In class work a variation may be introduced by exchanging the sketches so that the working drawing is made by another student. This emphasizes the necessity of putting down all the information and not relying on memory to supply that missing; and working with the idea that the object is not to be seen after the sketch is made. A most valuable training in the observation of details is the sketching from memory a piece previously studied. It is an excellent training in sureness of touch to make sketches directly in ink, perhaps with a fountain pen.

232. Materials.—The only necessary materials for sketching are a pencil (F or H), sharpened to a long conical point, not too sharp, a pencil eraser, to be used sparingly, and paper, either in notebook, pad, or single sheet clipped on a board.

In making working sketches from objects a 2-foot rule and calipers are needed to obtain dimensions. In addition to these, other machinists' tools may be required, such as a try square, surface gauge, depth gauge, thread gauge, and for accurate measurements a micrometer caliper. Sometimes a plumb line is of service. Much ingenuity is often required to get dimensions from an existing machine.

233. Technique.—The pencil should be held with freedom, not close to the point. Vertical lines are drawn downward with a finger movement in a series of overlapping strokes, with the hand somewhat in the position of Fig. 573. Horizontal lines are drawn with either a wrist or a forearm motion, shifting the hand to the

FIG. 573.—Sketching a vertical line.

FIG. 574.—Sketching a horizontal line

position of Fig. 574. In drawing any straight line between two points keep the eyes on the point to which the line is to go rather than on the point of the pencil. Do not try to draw the whole length of a line in a single stroke. It may be an aid to draw a *very* light line first, then to sketch the finished line, correcting the direction of the light line without rubbing it out. Do not be disturbed by any nervous waviness. Accuracy of direction is more important than smoothness of line.

It is legitimate in technical sketching to draw long vertical or horizontal lines by using the little finger as a guide along the edge of pad or clip board.

Inclined lines running downward from right to left are drawn easily with the same movement as vertical lines, but those running downward from left to right are much harder (except for left-handed persons). They may be drawn by turning the paper and drawing as horizontal lines.

Circles may be drawn by marking the radius on each side of the center lines, or more accurately, by drawing two diagonals in

addition to the center lines and marking points equidistant from the center on the eight radii. At these points draw short arcs perpendicular to the radii, then complete the circle, as shown in Fig. 575. Large circles can be done very smoothly after a little practice by using the finger as a pivot, holding the pencil stationary and rotating the paper. Another way of drawing a circle is to sketch it in its circumscribing square.

Fig. 575.—Method of sketching circles.

234. Making a Sketch.—In making an orthographic sketch the principles of projection and all the rules of practice for working drawings are to be remembered and applied. The object should be studied and the necessary views decided upon. These views will probably not be just the same as would be made in a scale drawing. For example, a note in regard to thickness or shape of section will often be used to save a view, Fig. 576. The end view of a piece circular in cross-section would be entirely unnecessary (as Fig. 579 illustrates). In other cases, additional views, part views and extra sections may be sketched rather than complicate the figures by added lines which would confuse a sketch, although the same lines might be perfectly clear in a scale drawing. Use judgment in the size of sketches. Have them large enough to show all detail clearly, allowing plenty of room for dimensions, notes and memoranda. Small parts are often sketched larger than full size, although working drawings are not made over full size except for very small pieces. Do not attempt to crowd all the views on a single sheet of paper; use as many as may be required, but name each view and indicate the direction in which it is taken in reference to the other views.

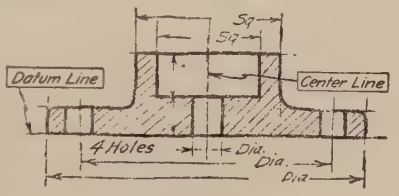

Fig. 576.—A one-view sketch.

In beginning a sketch always start with center lines or datum lines, and remember that the view showing the contour or characteristic shape is to be drawn first. This is generally the view showing circles if there are any.

In drawing on plain paper, the location of the principal points, centers, etc., should be marked so that the sketches will fit the sheet, and the whole sketch with as many views, sections and auxiliary views as are necessary to describe the piece, drawn *without taking any measurements,* but in as nearly correct proportion as the eye can determine.

A machine should, of course, be represented right side up, *i.e.*, in its natural working position. If symmetrical about an axis, often one-half only need be sketched. If a whole view cannot be made on one page it may be put on two, each being drawn up to a break line used as a datum line.

Sketches should be made entirely freehand, no ruled lines being used.

235. Dimensioning a Sketch.—After the sketching of a piece is entirely finished it should be gone over and dimension lines for all the dimensions needed for the construction added, drawing extension lines and arrow-heads carefully and checking to see that none are omitted, but still *making no measurements.*

236. Measuring.—Up to this stage the object has not been handled and the drawing has been kept clean. The measure-

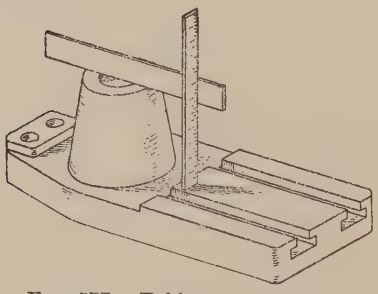

Fig. 577.—Taking a measurement.

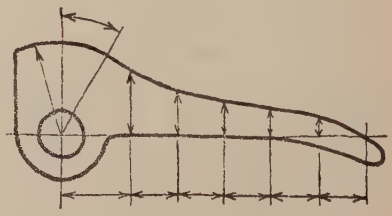

Fig. 578.—Measurements by offsets.

ments for the dimensions indicated on the drawing may now be added. The two-foot rule or steel scale will serve for most dimensions. Never use the draftsman's scale for measuring castings. Its edges will be marred and it will be soiled. The diameters of holes may be measured with the inside calipers. It is often necessary to lay a straightedge across a surface as in

Fig. 577. In measuring the distance between centers of two holes of the same size measure from edge to corresponding edge. Always measure from finished surfaces if possible. Judgment must be exercised in measuring rough castings so as not to record inequalities due to the foundry. Figure 578 illustrates measuring a curve by coordinates or offsets.

It is better to have too many dimensions rather than too few. It is a traditional mistake of the beginner to omit a vital figure.

Add all remarks and notes that may seem to be of any value.

The title should be written or lettered on the sketch, and for class sketches the amount of time spent.

Always *date* every sketch. Valuable inventions have been lost through the inability to prove priority, because the first sketches had not been dated. In commercial work the draftsman's notebook with sketches and calculations is preserved as a permanent record, and sketches should be made so as to stand the test of time, and be legible after the details of their making have been forgotten.

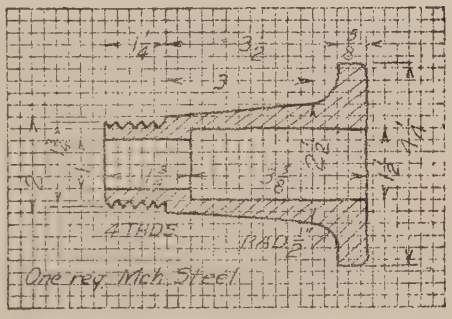

Fig. 579.—Sketch on coordinate paper.

237. Cross-section Paper.—Sketches are often made on coordinate paper ruled faintly in sixteenths, eighths or quarters of an inch, using it either simply as an aid in drawing straight lines and judging proportions, or by assigning suitable values to the unit spaces and drawing to approximate scale, Figure 579. The latter use is more applicable to design sketches than to sketches from the object.

238. Kinds of Technical Sketches.—Sketches may be divided into two general classes, first, those made before the structure is built, second, those made after the structure is built. In the first class are included the sketches made in connection with the designing of the structure, and might be classified as (1) *Scheming* or "idea" *sketches*, used in studying and developing the arrangement and proportion of parts. These are followed by (2) *Computation sketches*, made in connection with the figured

calculations for motion and strength. (3) *Executive sketches*, made by the chief engineer, inventor or consulting engineer, to give instructions for special arrangements or ideas which must be embodied in the design. (4) *Design sketches*, used in working up the schemes and ideas in such form that the design drawing can be started. (5) *Working sketches*, made as substitutes for working drawings.

The second class includes (1) *Detail sketches*, made from existing parts, with complete notes and dimensions, from which duplicate parts may be made directly, or from which mechanical drawings may be made, Fig. 580. The method of making these sketches has already been discussed. (2) *Assembly sketches*, made from an assembled machine to show the relative positions of the various parts, with center and location dimensions, or sometimes

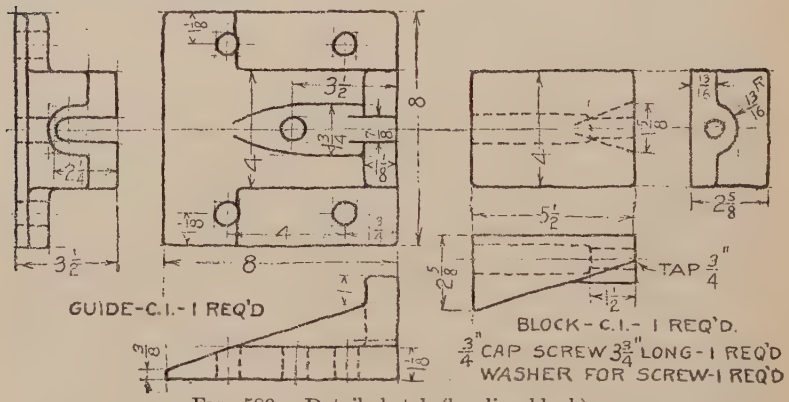

FIG. 580.—Detail sketch (leveling block).

for a simple machine, with complete dimensions and specifications. (3) *Outline* or *Diagrammatic sketches*. These are generally made for the purpose of location, sometimes to give the size and location of pulleys and shafting, piping or wiring, for use in connection with setting up of machinery; sometimes to locate a single machine, giving the over-all dimensions, sizes and center distances for foundation bolts, and location and sizes of pulleys, piping, etc.

239. Sketching by Pictorial Methods.—The pictorial sketch of an object or of some detail of construction will often explain it when the orthographic projection cannot be read intelligently by a workman. If a working drawing is difficult to understand, one of the best ways of reading it is to start a pictorial sketch of

it. Usually before the sketch is finished the orthographic drawing is perfectly clear. Often, again, a pictorial sketch may be made more quickly and serve as a better record than orthographic views of the same piece would do; and the draftsman who can make a pictorial sketch with facility will find abundant opportunity for its advantageous use.

The three pictorial methods are axonometric, oblique, and perspective. The first two have been explained in detail in Chapter VIII and their application in sketching referred to on page 137.

240. Axonometric Sketching.—Since measurements are not made on sketches there is absolutely no advantage in sketching

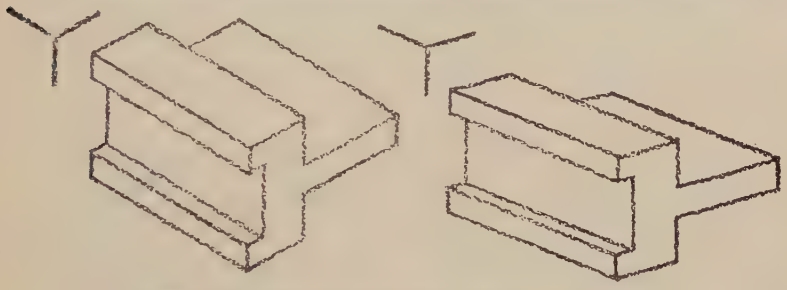

FIG. 581.—120° axes and flattened axes compared.

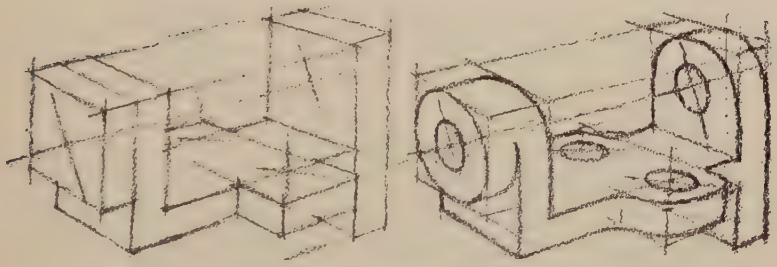

FIG. 582.—Blocking-in a sketch.

on isometric axes 120 degrees apart and making an unnecessary distortion. A much better effect is gained and the distortion greatly lessened by drawing the cross-axes at a much smaller angle with the horizontal, Fig. 581, and foreshortening them until satisfactory to the eye. It is legitimate in such an isometric sketch still further to decrease the effect of distortion by slightly converging the receding lines. Objects of rectangular outline are best adapted to sketching in axonometric projection.

The sketch should first be blocked-in by drawing the principal outlines, boxing the cylindrical parts in their enclosing square prisms. A circle in axonometric drawing is always an ellipse whose major axis is at right angles to the shaft or rotation axis of the circle and thus its minor axis coinciding with the shaft axis. Locate these axes and carry the sketch on as suggested in Fig. 582.

Some care must be exercised in adding dimensions to a pictorial sketch. The extension lines must always be either in or perpendicular to the plane on which the dimension is being given (see paragraph 161, page 184).

241. Oblique Sketching.—The advantage of oblique projection in preserving one face without distortion is of particular value in sketching, and the painful effect of this kind of drawing done mechanically may be greatly lessened in sketching, by fore-

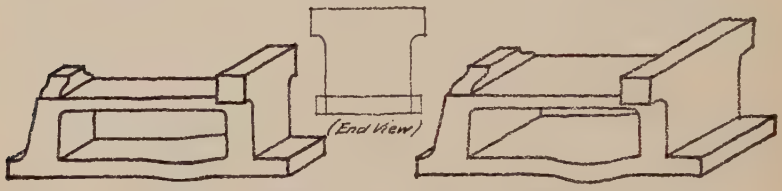

Fig. 583.—Oblique, with and without foreshortening.

shortening the cross-axis to a pleasing proportion, Fig. 583. By converging the lines parallel to the cross-axis, the effect of parallel perspective is obtained. This converging in either isometric or oblique is sometimes called "fake perspective."

242. Perspective Sketching.—A sketch made in perspective gives by far the most pleasing effect pictorially. In the chapter following this the essential principles of perspective drawing are considered. A knowledge of these principles is required in constructing a perspective drawing of a proposed structure from its plan and elevation. For perspective sketching from the object, while this knowledge is of great aid, one may get along by observing the ordinary phenomena of perspective which affect everything we see—the fact of objects appearing smaller in proportion to their distance from the eye, of parallel lines appearing to converge as they recede, of horizontal lines and planes "vanishing" on the horizon.

In sketching in perspective from the model the drawing is made simply by observation, the directions and proportionate lengths

of lines being estimated by sighting and measuring on the pencil held at arm's length, with the knowledge of geometrical rules and principles used as a check.

With the drawing board or sketch pad held *perpendicular* to the "line of sight" from the eye to the object, the direction of a line is tested by holding the pencil at arm's length *parallel* to the board, rotating the arm until the pencil appears to coincide with the line on the model, then moving it parallel to this position back to the board.

The apparent lengths of lines are estimated in the same way, holding the pencil in a plane perpendicular to the line of sight, marking with the thumb the length of pencil which covers a line

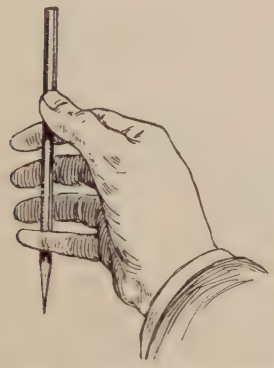

FIG. 584.—Estimating proportion.

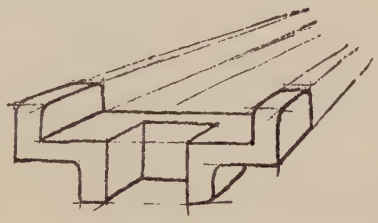

FIG. 585.—Parallel perspective sketch.

of the model, rotating the arm with the thumb held in position until the pencil coincides with another line, and estimating the proportion of this measurement to the second line, Fig. 584.

The sketch should be made lightly, with free sketchy lines, and no lines erased until the whole sketch has been blocked in. Do not make the mistake of getting it too small.

In starting a sketch from the object, set it in a position to give the most advantageous view, and sketch the directions of the principal lines, running the lines past the limits of the figure. Block in the enclosing squares for all circles and circle arcs and proceed with the figure, drawing the main outlines first and adding details later, then brighten the sketch with heavier lines. A good draftsman often adds a few touches of surface shading; the beginner should be cautious in attempting this.

Fig. 585 shows the general appearance of a "one-point" perspective sketch before the construction lines have been erased. Fig. 586 is a sketch in angular perspective.

243. Sketching from Memory.—Several references have been made to the value of memory training in connection with drawing, and some elementary exercise was suggested in Group VIII on page 121. After one has become proficient in sketching, the memory for form may be strengthened and the capacity for "stored observation" greatly increased by systematic and regular practice. The order of this study should be graded carefully; first, easy pictorial drawings to be read, then "copied" exactly

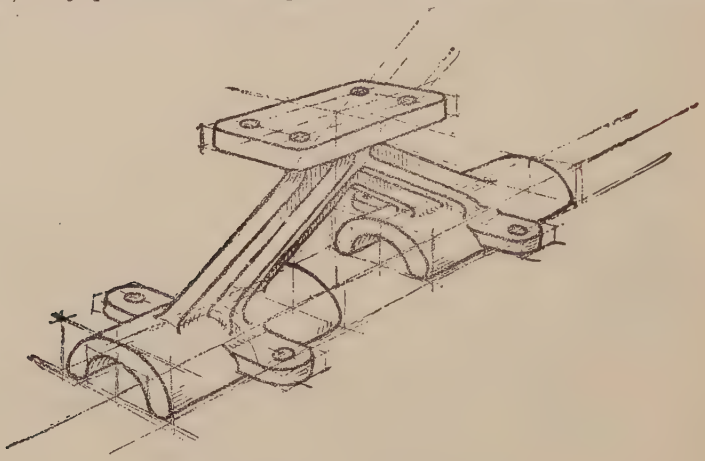

Fig. 586.—Angular perspective sketch.

from memory; second, orthographic drawings to be read and copied; third, pictorial drawings to be memorized, then drawn in orthographic; fourth, castings and machines to be studied and drawn in orthographic; fifth, orthographic drawings to be studied, then translated from memory into pictorial sketches.

Study the drawing or casting with close concentration until every detail is stored for future visualization (the time required for this observation should be noted, although it is not the important factor). Then make an accurate sketch of the object from memory. When finished compare the sketch with the original. The following day make another memory sketch of the same piece without further sight of the original. Carry this practice along with pieces progressively more difficult and the gain in ability to remember form and line will be surprising.

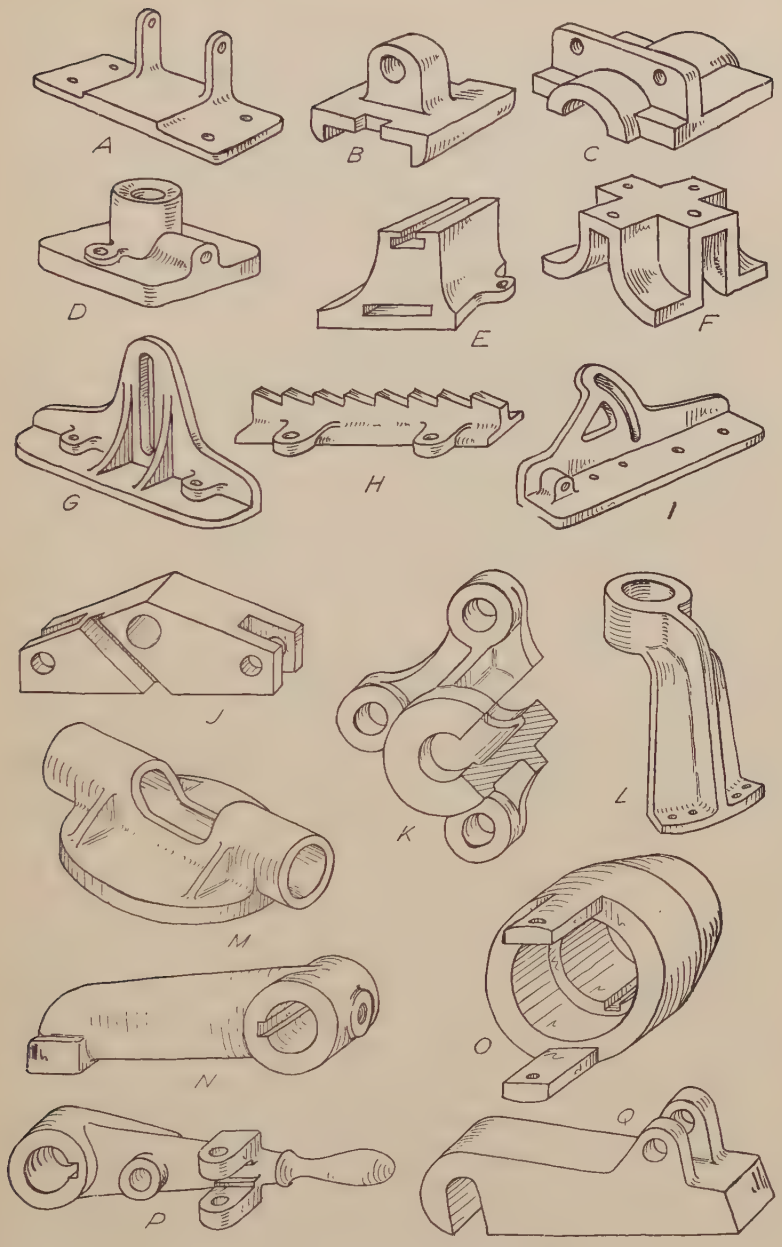

Fig. 587.—Problems for sketching.

PROBLEMS

244. As mentioned at the beginning of this chapter, the best practice is to be had in sketching from models. The small sketches of Fig. 587 may be used for either orthographic or pictorial sketching practice. To be of value they should be done carefully and with attentive supervision. They should be made to fill a $7'' \times 10''$ space.

Group I. Line practice

1 to 12. Draw figures 42 to 53 without measurement, in spaces about $4'' \times 4''$.

Group II. Orthographic Sketches of Details

13 to 24. Make orthographic sketches of Figs. 196 to 207.

25 to 41. Fig. 587. Sketch the necessary orthographic views.

Group III. Pictorial Sketches

42 to 56. Make pictorial sketches of Figs. 222, 223, 224, 225, 226, 228, 234, 236, 241, 252, 254, 255, 256, 525.

57. Make a pictorial sketch of a standard hexagonal nut for a 2″ bolt.

58. Make a pictorial sketch of the bracket in Fig. 535.

59. Make a pictorial sketch of the base in Fig. 538.

60. Make a pictorial sketch of the base in Fig. 546.

Group IV. Assembly and Detail Sketches

61. Make sectional assembly sketch of air valve, Fig. 524.

62. Make assembly sketch of leveling block, Fig. 580.

63. Make assembly sketch of tool post, Fig. 529.

64. Make detail working sketches of belt drive, Fig. 527.

In other figures of Chapters VII, VIII, X and XII will be found useful material for sketching problems.

CHAPTER XIV

Perspective Drawing

245. Perspective drawing is the representation of an object as it actually appears to an observer located at a particular station point. Geometrically it is the figure resulting when the cone of rays from the eye to the object is intersected by a vertical "picture plane." There is a distinction between "artists' perspective" and "geometrical perspective" in that the artist draws the object as he sees it projected on the spherical surface of the retina of his eye, while geometrical, or mechanical perspective is projected on a plane as in a photograph, but except in wide angles of vision the difference is not noticeable.

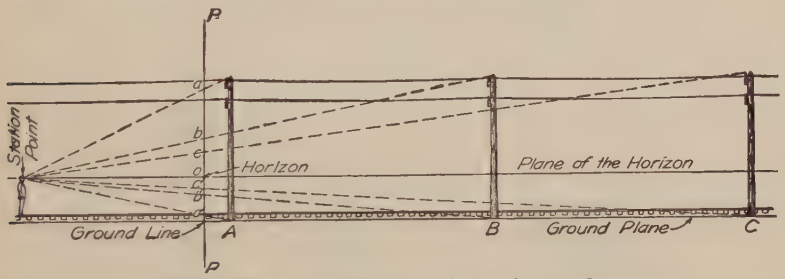

Fig. 588.—The observer and the picture plane.

In a technical way, perspective is used more in connection with architecture than in other branches, but every engineer will find it of advantage to know the principles of the subject.

246. Elementary Concepts of Perspective.—Let the student imagine himself standing on a long straight railroad track as in Fig. 588, with a perpendicular transparent plane erected between him and the view ahead. This plane is called the picture plane (*P.P.*) and upon it the picture is conceived to be projected. Rays from the observer's eye to the ends of the telegraph pole *A* intercept a distance aa' on *P.P.* Similarly rays from pole *B* intercept bb', a lesser distance. The intercept cc' from *C* is still less. These distances aa', bb', cc', etc., correspond in proportion to the heights of the images made upon the retina of the eye by the

respective poles A, B and C, and agree with our everyday experience, that the farther away an object is the smaller it appears. It is evident from the figure that as the succeeding poles in the line are considered, the projection of each upon the picture plane will be shorter than the preceding one. Thus a pole far away on the horizon would show only as a point at "o." The horizontal plane through this point o and the observer's eye is called the plane of the horizon, and the horizontal line of intersection of this plane with the picture plane is called simply the *Horizon*. Similarly the intersection of the ground plane with the picture plane is called the *Ground Line*. In drawing large objects the horizon is usually taken at a distance of $5\frac{1}{2}$ feet above the ground plane since that is about the height of a man's eye. The position of the observer is called the *Station Point*. To avoid a distorted picture it should not be closer to the picture plane than twice the width or height of the object to be drawn.

Figure 589 shows the picture as seen by the observer in Fig. 588. The plane of the paper is the picture plane. The intercepts aa', bb', cc', etc., of Fig. 588, show in the perspective as the heights of the respective poles as they diminish in size and disappear on the horizon. In a similar way the rails converge and vanish. It is evident that all horizontal planes vanish on the horizon line. Therefore *any horizontal line will vanish at some point on the horizon.* A system of parallel horizontal lines vanishes at a single point, thus, as with the telegraph wires and track, *horizontal lines perpendicular to the picture plane vanish at the Center of Vision*, a point on the horizon directly in front of the observer.

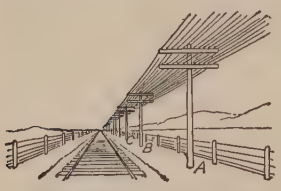

Fig. 589.—The picture.

Vertical lines, being parallel to the picture plane pierce it at an infinite distance and therefore do not vanish but show vertical in the picture.

247. Classes of Perspective Drawings.—Ordinary perspective drawings may be divided into two classes (1) angular perspective and (2) parallel perspective, although the latter is simply a special case of the former.

When the object is so situated that none of its principal vertical planes are parallel to the picture plane it is said to be in *angular perspective*. It may be turned at any angle (30 degrees is very

often used). If the angularity is reduced to zero degrees the face becomes parallel to the picture plane, making *parallel perspective* drawing. Figure 589 is in parallel perspective since the cross-arms and railroad ties are parallel to the picture plane.

248. To Make an Angular Perspective Drawing.—Let it be required to make an angular perspective of the monument, Fig. 590, having given two orthographic views (as in insert). Assume

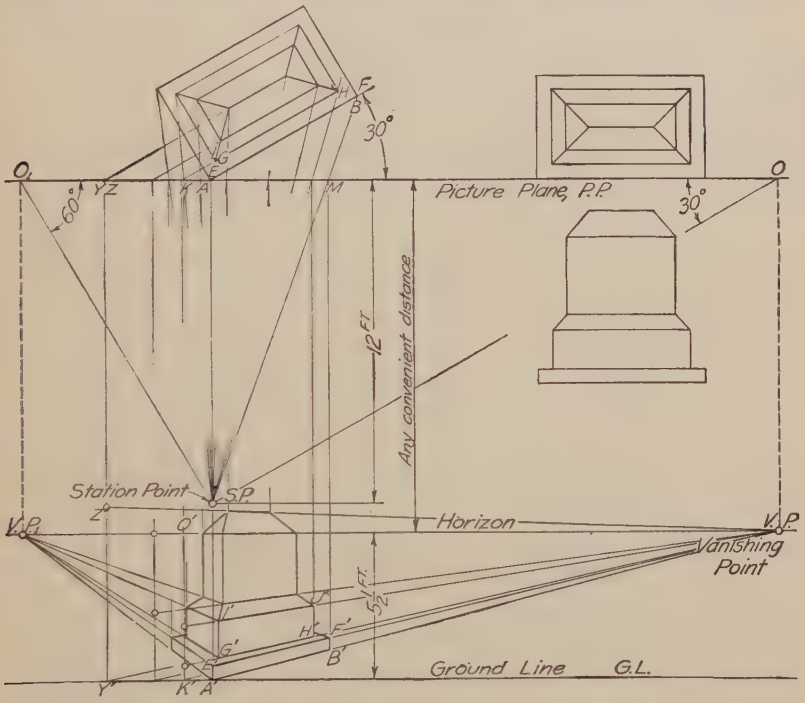

Fig. 590.—Angular perspective, using cone of rays.

the picture plane to be set up against the front corner of the base, at an angle of 30 degrees with the long side, and the observer 12 feet away directly in front of the corner, with a 5½ foot horizon.

The upper part of Fig. 590 may be thought of as the top view and the lower part the front or elevation view of the perspective drawing, the picture plane having been detached and moved forward, then laid down into the plane of the paper. The top view is used for construction purposes only, and in practical work will usually be on a separate piece of paper held in position by thumb tacks.

Referring to the top view, visual rays from the station point *S.P.* (which is the top view of the observer's eye, 5½ feet above the ground) to the horizontal line *AB* of the long side of the base give on the picture plane an intercept *AM*. Imagine the line *AB* as moving to the right along the ground but still making 30 degrees with *P.P.* Its intercept will become less and less, reaching zero value at some point *O*. This point is evidently on a 30-degree line from the *S.P.*, and becomes the *Vanishing Point* for all horizontal 30-degree lines. Thus the vanishing point for any set of horizontal lines is found by drawing a line parallel to them from the *S.P.* to the *P.P.* Now imagine the picture plane, whose top view or edge only has been thus far considered, to be moved forward any convenient distance and revolved into the plane of the paper about the ground line *G.L.* The horizon will fall 5½ feet above the *G.L.* and the vanishing point *O* of the plan, being on the horizon, will fall at *V.P.* Find the vanishing point for the horizontal lines at 60 degrees by drawing a 60-degree line from *S.P.* to the picture plane at O_1 and drop a perpendicular to $V.P_1$.

The perspective of the line *AB* of the plan would be found by drawing a line from *A′* (which is in the picture plane) to *V.P.* and dropping a perpendicular from *M*. Since the corner of the base is in the picture plane, *A′E′* will show its actual height and the top edge *E′F′* of the base will be drawn as shown.

249. Vertical Measurements.—Referring again to Figs. 588 and 589, it is evident that on account of the convergence of the visual rays all lines back of the picture plane are shortened and that only lines lying in the picture plane show in their true length. Hence *all measurements must be made in the picture plane.* Thus, to get the perspective of the face *G H J I*, imagine on the plan a vertical plane containing this face, extended until it cuts the picture plane at *K*. This intersection on the front view becomes the line *Q′K′*, which is called a *measuring line.* On it measure the actual heights of *G* and *I* from the ground. Lines vanished to *V.P.* from these measured heights and intersected by perpendiculars dropped from the intercepts on the plan will give the perspective of the face. In the same way find the perspective of the face of the die block, and finish the figure. Notice that *Z′Y′* is the measuring line for the ridge.

250. Summarizing.—(1) Draw the top view of the object, at the desired angle with *P.P.*; (2) locate the station point and draw

from it the cone of rays, obtaining the intercept of each line of the plan; (3) find the top view of the two vanishing points by drawing from *S.P.* lines parallel to the sides of the object; (4)

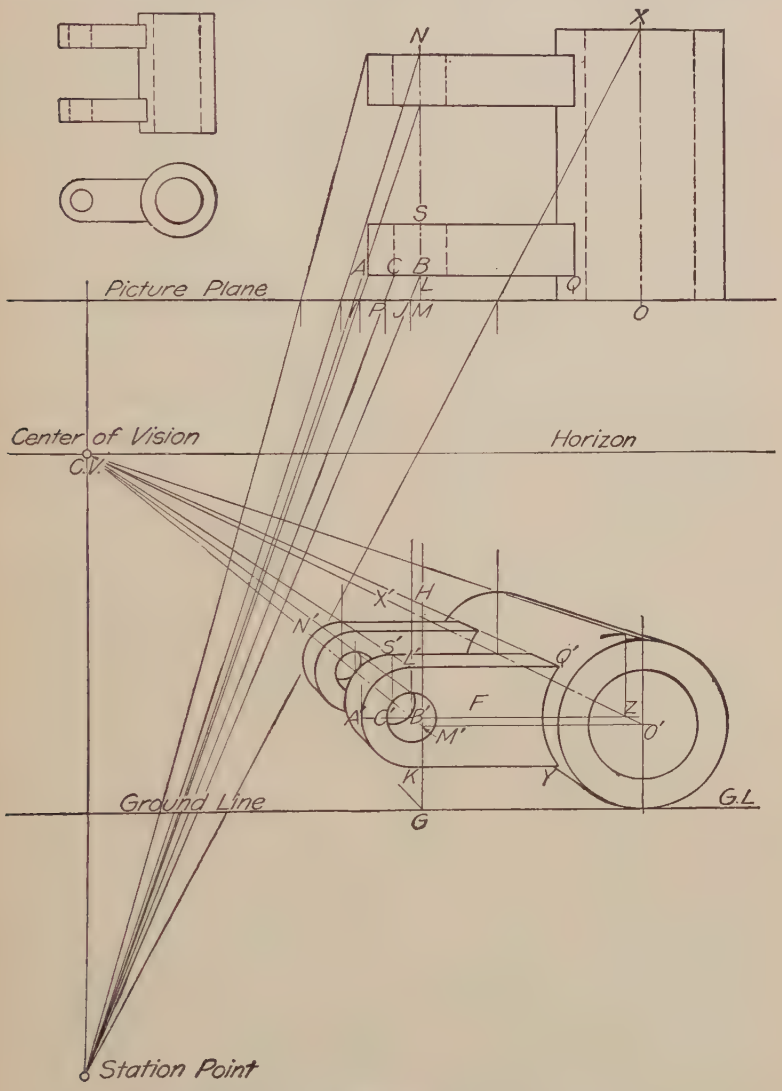

Fig. 591.—Parallel perspective, using cone of rays.

draw the horizon and ground line for the picture; (5) drop the vanishing points to the horizon; (6) start the picture, building from the ground up.

Usually, for compactness on the paper the picture is located in the space between the station point and the picture plane, as in Fig. 591. Pins, or preferably sewing needles, set at the *V.P.* and *S.P.* are convenient aids in drawing converging lines quickly and accurately.

251. Parallel Perspective.—For objects having circles or other curves in a vertical plane, parallel perspective is very convenient as the curves are drawn in their true shape. It is also suitable for interiors, street vistas and similar views where considerable depth is to be represented.

252. To Make a Parallel Perspective Drawing.—Fig. 591. As in angular perspective, the position of the observer's eye is chosen with reference to the picture plane and ground plane, and the plan drawn to scale. The top view of the object is so placed that the planes containing the principal contours are parallel to the picture plane. Consequently all horizontal lines in these planes will be horizontal in the picture and have no vanishing point. Horizontal lines perpendicular to the picture plane will vanish at the center of vision, as in Fig. 589. (Since there is only one vanishing point this is sometimes called "one-point" perspective.) Except for interior views the *S.P.* is generally located to the right or left of the object. For convenience, one face of the object is usually placed in the picture plane and is thus not reduced in size in the perspective.

In Fig. 591 the end of the hub is in the picture plane, thus the center O' is directly below O of the plan, and the circles are drawn in their true size. From O' draw the center line $O'X'$ to *C.V.* To find the perspective of the center line MN pass a vertical plane through MN intersecting the picture plane in the measuring line GH. Draw a horizontal line from O' intersecting GH, thus locating M', and draw from M' the center line $M'N'$.

By using these two center lines as a framework the remaining construction is simplified. A ray from *S.P.* to B pierces the picture plane at J, which projected down to the center line locates B', and a horizontal line $B'Z$ through B' is the center line of the front face of the nearer arm. The intercept IJ projected down gives the perspective radius $A'B'$. The circular hole of radius CB on the plan has an intercept PJ, giving $C'B'$ as the perspective radius. The arc $Q'Y$ has its center on $O'X'$ at Z. On drawing the tangents $L'Q'$ and KY the face F is completed.

The remaining construction for the arms is exactly the same as that of face F, moving the centers back on the center lines and finding the radii from their corresponding intercepts on the picture plane.

253. The Revolved Plan Method.—This method, sometimes called the method of diagonals and perpendiculars, may often be used to advantage in parallel perspective instead of the cone of rays method. It depends on the principle that the perspective of any point can be found by drawing the perspectives of two

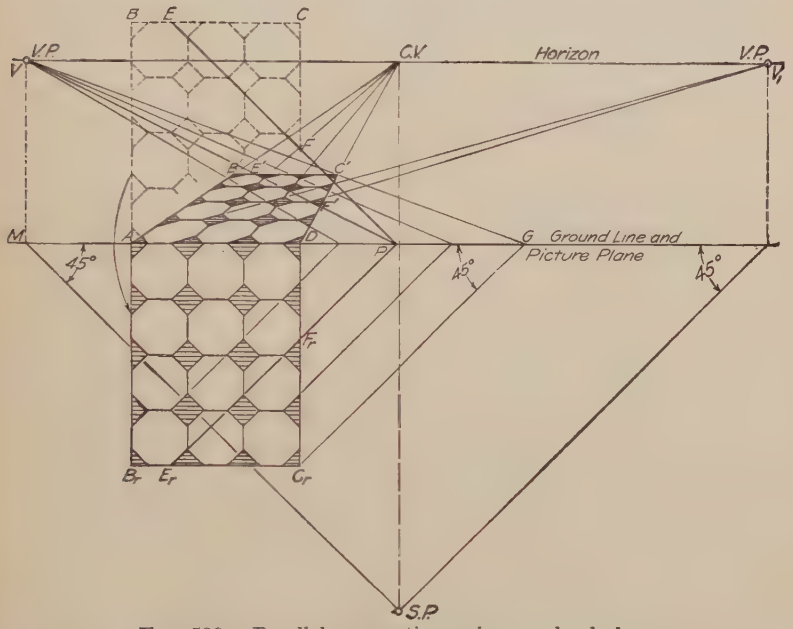

FIG. 592.—Parallel perspective, using revolved plan.

lines through it, one perpendicular to the picture plane and one at 45 degrees. One essential feature in drawing by this method is that the picture plane instead of being detached and moved before revolving, is revolved where it stands, so that the line representing the edge of the picture plane in the plan view becomes the ground line of the pictorial view. Thus in Fig. 592 the phantom A B C D is the plan location of a tiled floor, and the picture plane has been revolved down over it. All the lines of the pattern which are perpendicular to the picture plane will vanish at the center of vision $C.V.$ The lines at 45 degrees, such as EP, will vanish at a point found as in angular perspective by drawing a

line through *S.P.* parallel to *EP*, to *M* and projecting to the horizon at *V*. To avoid the confusion resulting from the perspective falling on the plan, *the plan is not drawn behind the picture plane but is revolved through 180 degrees* and drawn in front in reversed form at *A* $B_r C_r D$. The line *EP* thus reverses to $E_r P$.

254. To Draw by the Revolved Plan Method.—Fig. 592. Draw a ground line and horizon line. Assume *S.P.* and from it draw 45-degree lines locating *V* and V_1. Draw the revolved plan *A* $B_r C_r D$, the front edge against the ground line. Draw a diagonal and a perpendicular from each point to the ground line. Vanish all the perpendiculars to *C.V.* and the diagonals to *V*.

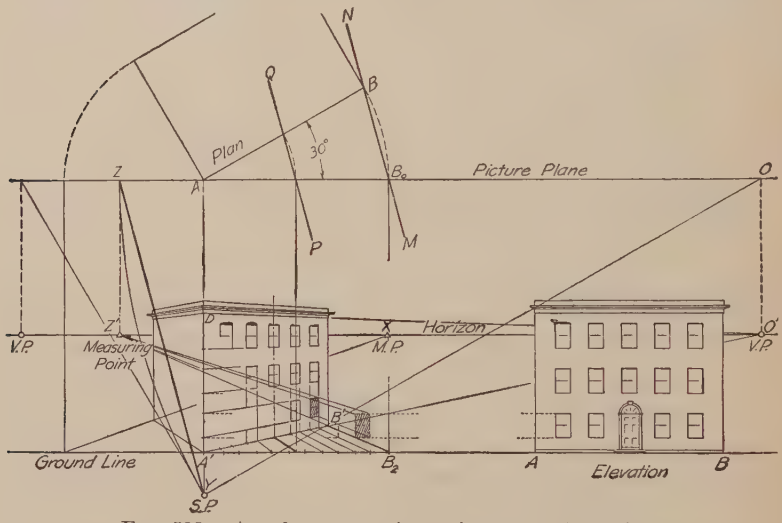

Fig. 593.—Angular perspective, using measuring points.

Their intersections will locate the perspective. The other system of 45-degree lines on the pattern would vanish at V_1. The points *V* and V_1 are called "distance points" since they are the same distance from *C.V.* as *S.P.* is from *P.P.* The perspective could be made without drawing the plan at all, by simply measuring distances on the ground line. Thus the length of *DC* might have been measured from *D* to *G*, and *GV* would intersect the perspective of the perpendicular giving *DC'* as the perspective of *DC*.

255. Measuring Points.—In the same way, angular perspective may be drawn without using the cone of rays and projecting from the ray intercept on the picture plane, by making horizontal measurements through the use of "measuring points." The

measuring point method has some advantage in laying off a series of measurements, such as a row of windows, as it avoids a confusion of intercepts on the picture plane and the inaccuracies due to long projection lines. It will be found of advantage when the cone of rays method is used, to use measuring points for some measurements, and as a check on the first method.

In the measuring point method the wall AB, Fig. 593, is conceived to be revolved to AB_o for measurement purposes. AB_o, showing below as $A'B_2$, lies in the picture plane and measurements may be made on it directly as shown. In projecting these divisions to $A'B'$ in the perspective drawing, an extra vanishing point is needed for such lines as MN and PQ which connect the two positions of the face. By drawing as usual a line from *S.P.* to *P.P.* parallel to MN and projecting to the horizon, the vanishing point Z' is found. Such a point is called a *measuring point* and may be defined as the vanishing point for lines joining corresponding points of the actual and revolved positions of the face concerned.

The divisions on the line $A'B_2$ are therefore projected to $A'B'$ by lines converging to the measuring point Z' and the work completed as under the other method. For work on the end of the building, revolve the end wall as indicated and find another measuring point X, proceeding in the same manner as outlined above for the front wall.

The triangles $A\ B\ B_o$ and $O\ Z\ Y$ are similar, since their sides are respectively parallel. Since $AB = AB_o$, then $OY = OZ = O'Z'$. Therefore, a measuring point is as far from the corresponding vanishing point as the station point is from the picture plane, measuring parallel to the face concerned. Practically, a measuring point is located by swinging an arc with O as a center, from *S.P.* to Z and projecting to Z'. Nevertheless, the fundamental idea must always be kept in mind—that the measuring point is the vanishing point for lines joining the actual and revolved positions of the wall.

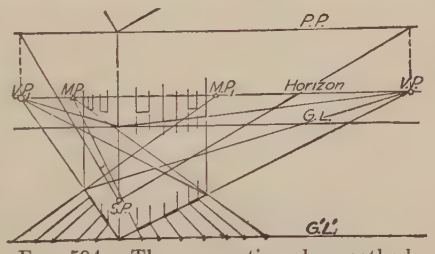

FIG. 594.—The perspective plan method.

The *elevation* or front view in Fig. 593 has been erected on the ground line so that vertical distances or heights may be obtained

by projecting horizontally to the measuring line $A'D$. This method is convenient not only in architectural work but in many other cases where a perspective is to be made from two (or more) orthographic views. In fact, all three views may be utilized and held in place by thumb tacks while the perspective is being made, avoiding much laborious transferring of dimensions.

256. Perspective Plan Method.—In practical work it will be found very advantageous to make all horizontal measurements

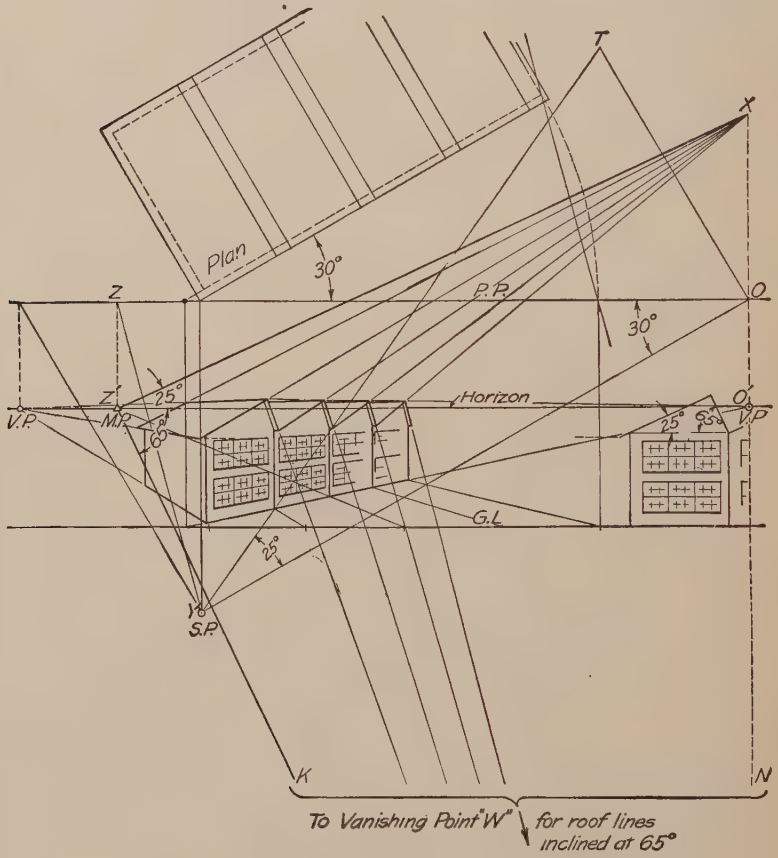

Fig. 595.—Vanishing points of inclined lines.

on a *perspective plan* below the ground line as if the plan were laid out on a basement floor. This not only gives better intersections of the lines to the vanishing and measuring points but keeps the construction work off the drawing. The method is suggested in Fig. 594.

257. Inclined Lines.—Thus far attention has been directed to finding the perspective of horizontal and vertical lines. Inclined lines comprise all those lines that are neither parallel nor perpendicular to the horizontal or ground plane. Because they are inclined to the horizontal plane they do not vanish on the horizon but at a point some distance above or below the horizon, depending on their inclination.

The perspective of an inclined line *may* be drawn by finding the perspective of two points on it. If many inclined lines are to be drawn in perspective this becomes laborious. As parallel inclined lines often occur in groups, it is usually more convenient to find vanishing points for them. *A system of parallel inclined lines vanishes at a single vanishing point.*

Figure 595 illustrates the application of the inclined vanishing point in finding the perspective of a factory building having a "sawtooth" roof. Because of the repeating nature of the construction, measuring points have been used in the solution. The new situation with which we are confronted is that of finding the vanishing points for the two systems of inclined lines (25 and 65 degrees).

The line YO is the horizontal distance (at 30 degrees) from the *S.P.* to the *P.P.* O, projected to the horizon gives the 30-degree vanishing point O'. An inclined line lying in the same vertical plane as OY but sloping upward at 25 degree will vanish at a point that is some distance directly above O'. This distance or rise of the vanishing point may be found by constructing the right triangle YOT. The 25-degree angle corresponds to the inclination of the line with the horizontal and the side OT will be the distance that the inclined *V.P.* is above O'. By making $O'X = OT$ the vanishing point X for the lines inclined at 25 degrees is located.

Second Method.—Consider the right triangles YOT and $Z'O'X$. $OT = O'X$, $Z'O' = YO$ since $YO = ZO = Z'O'$. Therefore, the two triangles are equal and the angle $O'Z'X$ equals 25 degree. This means that the vanishing point X may be found by drawing from the measuring point Z' a line inclined by an amount equal to the slope of the roof lines (25 degrees). The point X will be where it intersects a vertical line through the horizontal vanishing point O'. This method is convenient when measuring points have already been located in connection with the other parts of the problem. The former method, it should be remembered, did not employ the measuring point.

The steeper side of the roof, inclined at 65 degrees, may be found in the same manner. Draw from the measuring point Z' a line $Z'K$ inclined at 65 degrees; where it intersects the vertical line $O'N$ (beyond the limits of the figure) will be the vanishing point W for the system of lines inclined at 65 degrees.

258. Circles in Perspective.—The perspective of a circle is an ellipse whose axes usually fall at odd angles not easily determined. Consequently the geometrical methods for ellipse construction should not be attempted; rather, the circle should be plotted in perspective point by point (see Fig. 596). Although any points may be taken, it is convenient to choose points that are on the diagonals of the enclosing square or on 30-degree, 60-

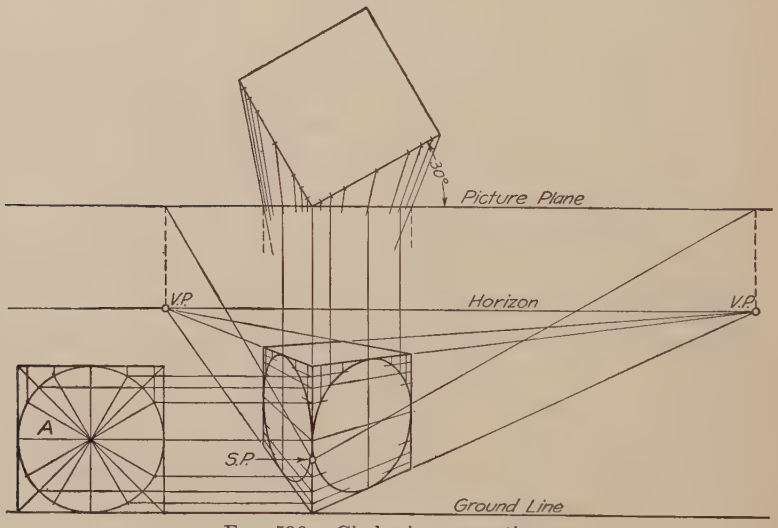

Fig. 596.—Circles in perspective.

degree lines etc., as at A. By using points at such known angles, two or more points may be gotten at a time.

Any curve may be drawn in perspective by plotting a sufficient number of points, (locating them by their coordinates from any given or assumed reference lines) and using a French curve to connect them.

CHAPTER XV

The Elements of Architectural Drawing

259. It is entirely beyond the scope of this book to take up architectural designing. But in the application by the architect, of engineering drawing as a language, there are idioms and peculiarities of expression with which all engineers should be familiar, as in the interrelation of the professions they are often required to read or work from architects' drawings, or to make drawings for special structures.

260. Characteristics of Architectural Drawing.—The general principles of drawing are the same for all kinds of technical work. Each profession requires its own special application of these principles and the employment of particular methods, symbols and conventions. In architectural drawing the necessary smallness of scale requires that the general drawings be made up largely of conventional symbols for the different parts. So many notes of explanation and information regarding material and finish are required that it is not possible to include all of them on the drawings so they are therefore written separately in a document called the *specifications*. These specifications are regarded as part of the plans and have equal importance and weight.

Architecture is one of the fine arts, and in the make-up of an architect's drawings there is an evidence of artistic feeling, produced in part by the freehand work and lettering upon them, in part by the use of finer lines, that gives them an entirely different appearance than that of a set of machine drawings. One peculiarity found in many modern architectural drawings is the tendency to overrun corners. This, in an experienced draftsman's work, gives a certain snap and freedom, but it must not be taken by the beginner as a license for carelessness. Imitation of it is affectation.

In arrangement of views third angle projection is standard American practice for all branches of drawing, although now and then an architectural detail is seen made in the first angle. Sometimes it is advantageous to use what might be called second

angle projection, superimposing one view over another. This is often done in stair detailing, as illustrated in Fig. 608.

Reflected Views.—A distinctively architectural feature is the occasional use of the "reflected view," the drawing, usually a part view, as of a soffit or ceiling, being made as if reflected in a mirror on the ground. It should not be confused with another architectural term, the "view looking up," often used to show the under face of a cornice, etc.

Profiling.—Another architectural drawing characteristic shown in Fig. 608 is that of "profiling" or "silhouetting" the important outline with a heavier line than the other lines of the drawing, which aids greatly both in the appearance and ease of reading. It is of particular value on sectional drawings, both assembly and detail, to bring out the sectional outline distinctly from the parts beyond the cutting plane.

261. Kinds of Drawings.—Architectural drawings may be divided into three general classes: (1) Preliminary Sketches and Drawings, (2) Display and Competitive Drawings, (3) Working Drawings.

262. Preliminary Sketching.—The architects' designing problems present so many solutions that a great amount of preliminary sketching is necessary, and the architectural draftsman must be facile with the pencil. Schemes are carried on first in very small study sketches, which are afterward enlarged and worked up into sketches to scale. Tracing paper is used largely in this work as one sketch can be made over another, thus saving time in laying out and enabling the preservation of all the different solutions. The final preliminary sketches are submitted to the client, and should give all the general dimensions. In preparing these sketches the important consideration to be kept in mind is that the client is usually a person not accustomed to reading a drawing, and that they must therefore be particularly clear and free from ambiguity. Tracing paper sketches are often mounted for display either by tipping or floating as described on page 417, and sometimes are made more effective by touches of color with colored crayons.

263. Display Drawings.—The object of display drawings is to give a realistic or effective representation of the arrangement and appearance of a proposed building for illustrative or competitive purposes. They may be simply plans and elevations, or may include perspective drawings; and in both cases may contain

little or no structural information. For legibility and attractiveness they are "rendered" generally on Whatman, eggshell, tracing, or other white paper, in water color, pen-and-ink, crayon or pencil, giving the effect of color, or light and shade. Such accessories as human figures, adjacent buildings, foliage etc., are often introduced in elevations and perspective drawings, not so much for pictorial effect as to give *scale*, an idea of the relative size of the building. A pen drawing in perspective, as used in a competition drawing[1] is shown in Fig. 597.

Fig. 597.—A pen drawing.

In rendering plans for display or competitive purposes, tints and shadows are often used to show the plan in relief. The terms poché and mosaic are used in this connection, "poché" meaning simply the blackening of the walls to indicate their relative importance in the composition, and "mosaic" the rendering in light lines and tints of the floor design, furniture, etc., on the interior, and the walks, drives and planting of the exterior. Sometimes in a symmetrical room one-half is shown with a floor mosaic, and

[1] Figures 597, 598 and 599 are from a drawing by Kelly and Lenski. Courtesy of the Upper Arlington Company.

the other half with the ceiling mosaic as a reflected view. The first and second floor plans of the house, Fig. 597, are shown in Fig. 598 and the lot plan in Fig. 599.

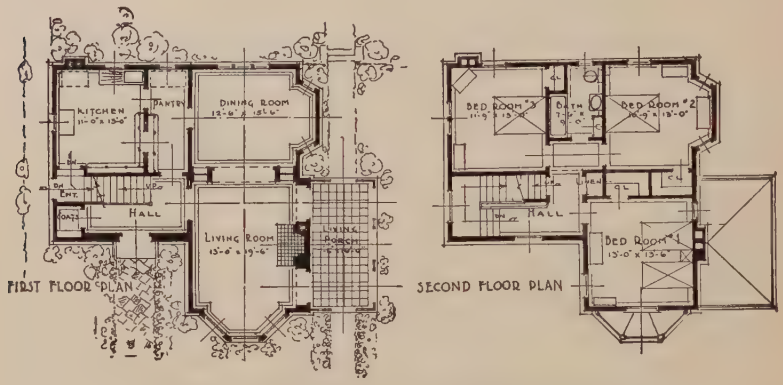

Fig. 598.—A treatment of display plans.

The architect must be familiar with perspective drawing as he uses it both in the preliminary study of his problem and in showing his client the finished appearance of the proposed structure. Somtimes a "fake perspective" is made for a client by rendering the front elevation in shades and shadows, adding a horizon line and foreground with planting and perhaps figures, in parallel perspective.

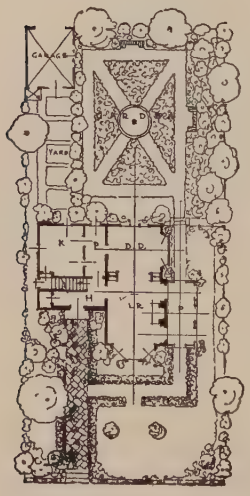

Fig. 599.

264. Models.—Of present interest to the architectural draftsman is the rapidly increasing use of models for proposed buildings. Formerly the work of a modeler in plaster of paris, these are now being made more commonly in the drawing room, using drawing paper and cardboard, and gaining over the white plaster model a greatly increased effect of realism in color and texture. The advantage of such a model in showing the appearance of the completed building and the perspective effect from any angle is of obvious value both to the designer and to the client.

In making paper models the different walls and roofs are laid out in developed form, rendered, folded and mounted on a

board base. The particularly important point to observe is that all features, such as moldings, railings, planting, etc., be kept to scale. Much artistic ability may be evidenced in their construction, and the ingenuity of the modeler is exhibited in the use of various materials in the "entourage." Tinted sponges for trees, rubber sponge for hedges and shrubbery, sawdust and sand in glue, and various other accessory material will be thought of. For reproduction purposes, a photograph of the model is used instead of a perspective drawing.

265. Working Drawings.—Under this term are included *plans*, *elevations*, *sections* and *detail drawings*, which taken with the *specifications* for details of materials and finish give the working information for the contract and erection of the building. Their first use is by the contractors in estimating for competitive bids.

All the general principles of Chapter XII regarding working drawings are applicable to architectural working drawings. The assembly drawings are usually drawn with only one plan or elevation on a sheet in order to keep the drawings to convenient working size. The commonest scale used on these drawings is $\frac{1}{8}'' = 1'$, or as often expressed "one inch equals eight feet." For small buildings, perhaps up to 60 feet long $\frac{1}{4}'' = 1'$ is used. In making working drawings the draftsman must be familiar with local and state building codes, and legal requirements as to approval, permits and restrictions.

266. Plan of Site.—Before designing any structure of importance a site plan is made giving the property line, contours, locations of trees and other features, and the building is designed to fit the site. This drawing is completed by locating on it the building, approaches and contours of finished grades. For an ordinary residence, dimensions placed on the basement plan showing the distances of the building from the lot lines usually fulfill building permit requirements.

267. Floor Plans.—Figs. 600, 601, 602. A floor plan is a horizontal section at a distance above the floor varying so as to cut the walls at a height which will best show the construction. The cut will thus evidently cross all openings no matter at what height they are from the floor. On account of the small scale compared to the actual size of the building, plans are largely made up of conventional symbols, with notes referring to detail drawings of different items. Walls, doors, windows, fixtures etc., are all indicated by conventional representation, using symbols

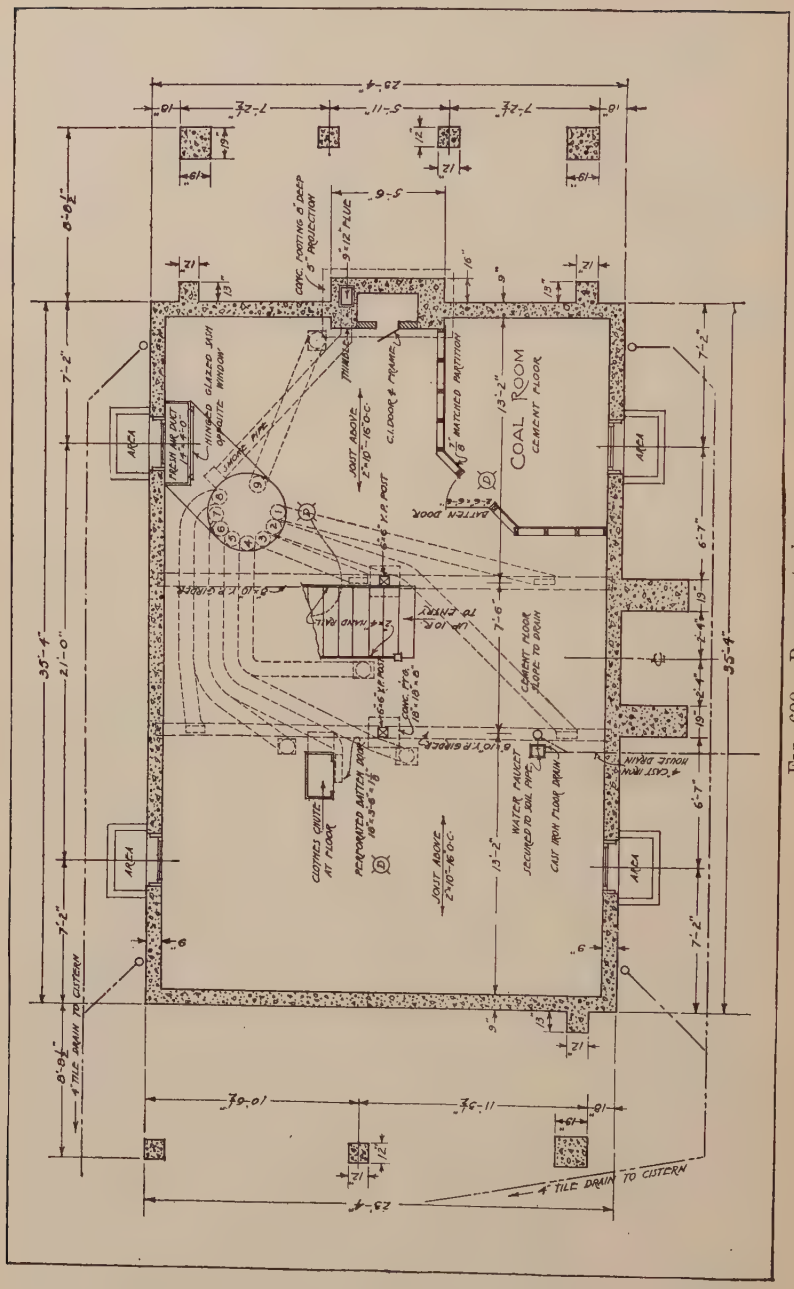

FIG. 600.—Basement plan.

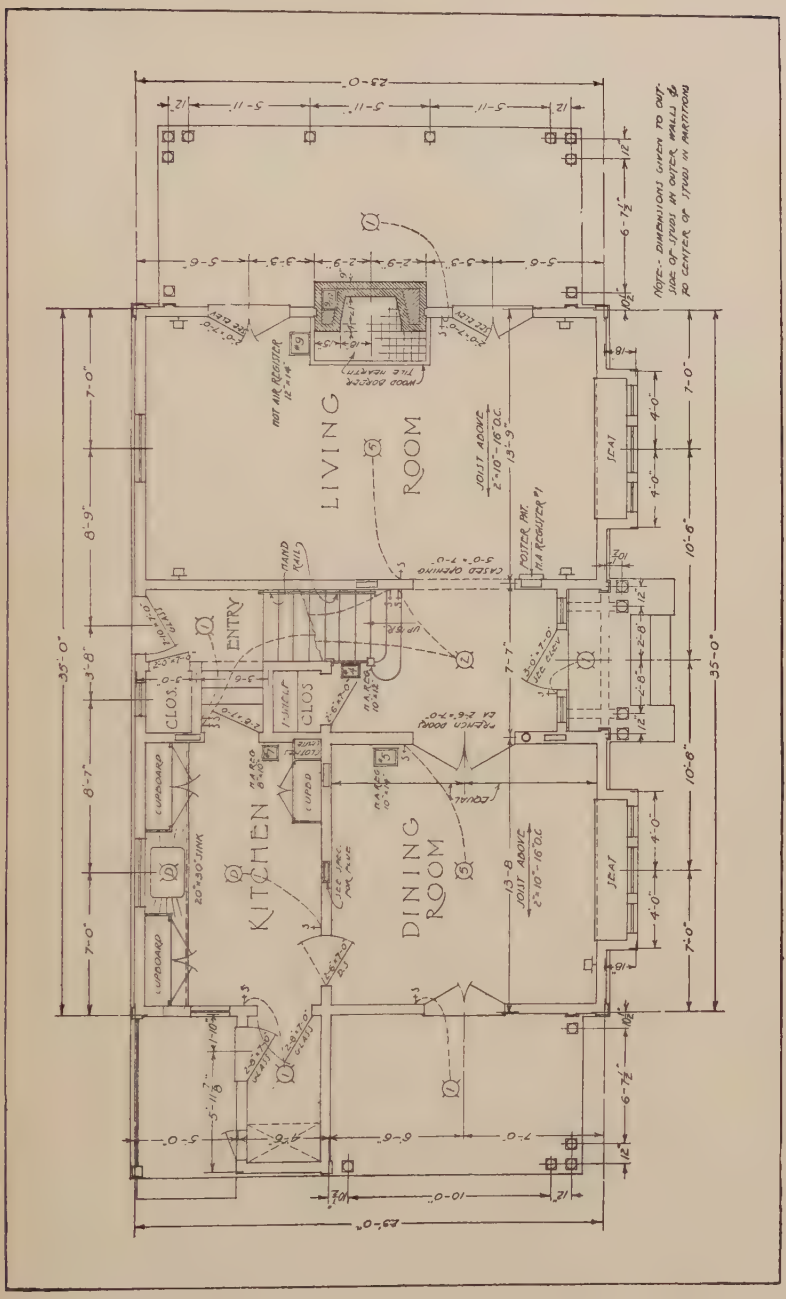

Fig. 601.—First floor plan.

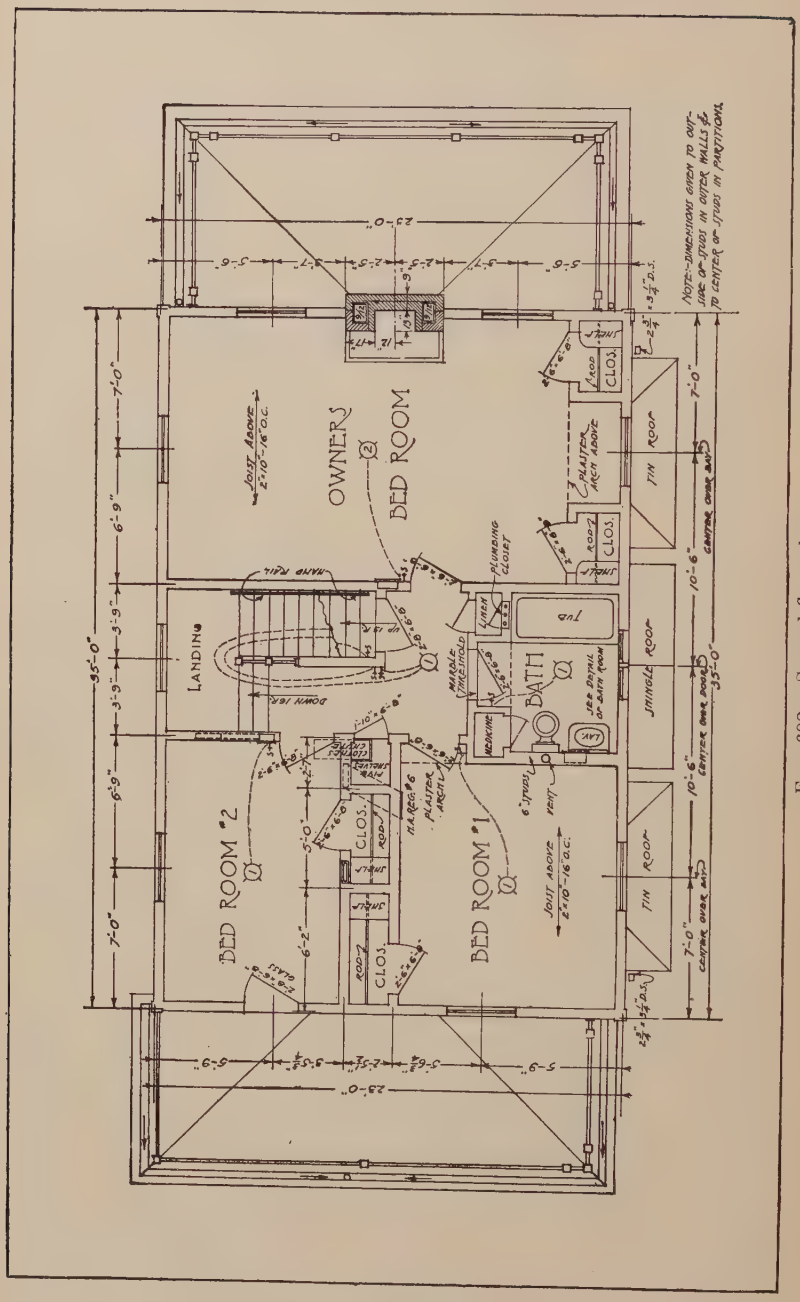

Fig. 602.—Second floor plan.

which are readily understood by the contractors who have to read the drawings. A floor plan contains, in general, the information for the space between the floor represented and the floor above, even though some items noted are above the cutting plane. The plan will show the location of all doors, windows, partition walls, radiators, built-in fixtures, ducts and flues, outlets for lighting and heating, material of floor, and information concerning the ceiling above, as beams, light outlets etc. The joist framing of the floor above is indicated except when separate framing plans are necessary.

268. Framing Plans.—The framing of a simple building is usually left to the contractor. In the case of special framing for heavy or concentrated loads, such as mill buildings, separate framing plans are drawn showing all the details of construction. Separate plans are also drawn when required, for heating and ventilating work, electric wiring, location and foundations for machinery, etc.

269. Drawing a Plan.—A plan is always laid out with the front of the building at the bottom of the sheet. After selecting the scale ($\frac{1}{4}'' = 1'$ for ordinary house plans) draw and measure a line representing the outside face of the front wall. If the plan is symmetrical draw the main axis. The axes of a plan correspond to the center lines of a machine drawing and have a very important place in design. Complete the exterior walls and interior partitions (frame walls are drawn 6″ thick, brick walls 9″, 13″, 17″ etc.), then locate stairways, doors, and other interior construction. In drawing the stairway, first make a diagram to find the number of steps and space required (for this the architect always uses the scale as shown in Fig. 107). The rise, or height from one step to the next is between $6\frac{1}{2}$ to $7\frac{1}{2}$ and the tread proportioned so that the sum of rise and tread is about $17\frac{1}{2}$ inches. (One well-known rule makes the tread plus twice the rise equal 25 inches.) On the plan the lines drawn represent the edges of the risers and are as far apart as the width of the tread. The entire flight is not drawn on the plan but is stopped about half-way up so as to show what is under it. Each floor plan thus shows part of the stairways leading both up and down from the floor represented. Always indicate the direction and number of risers in the stairway by an arrow and note (as in Fig. 600). The windows are not drawn until the elevations have been designed, but the center lines for their symmetrical position in the wall

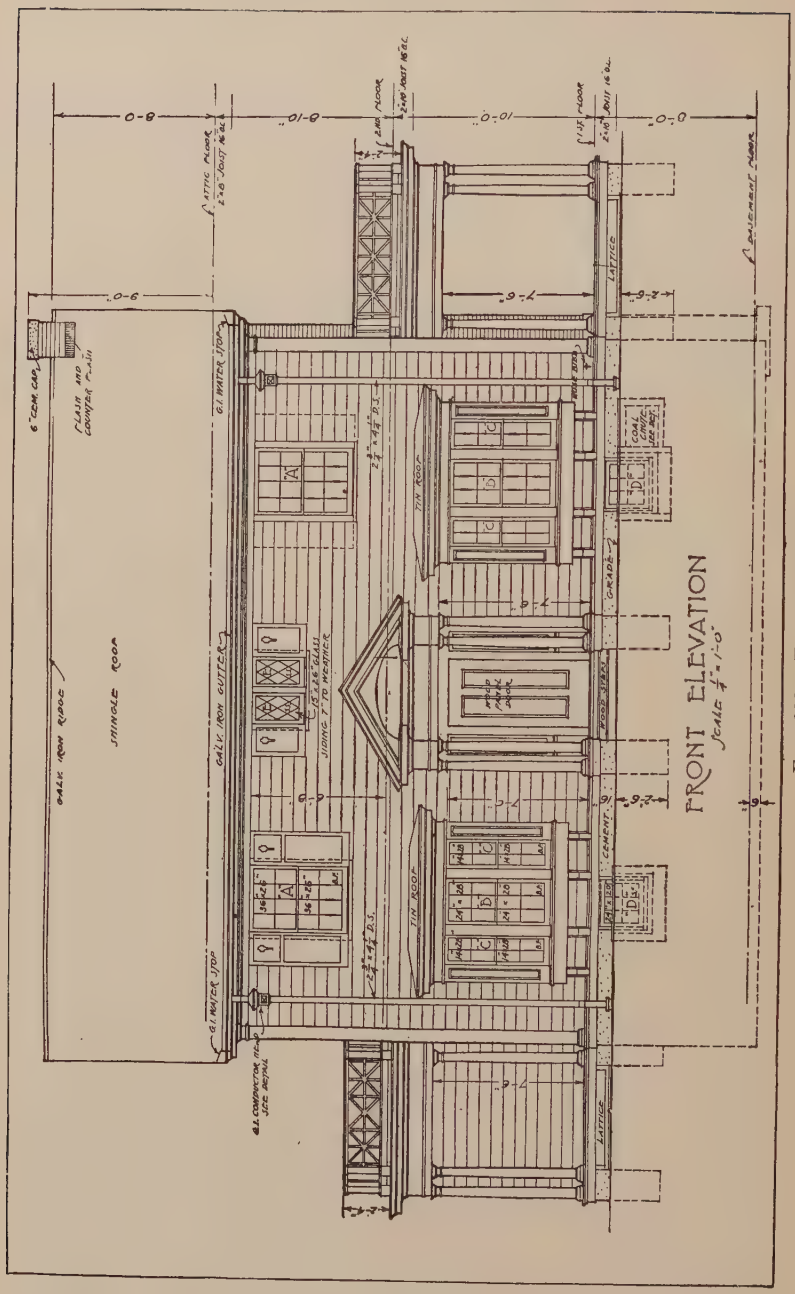

Fig. 603.—Front elevation.

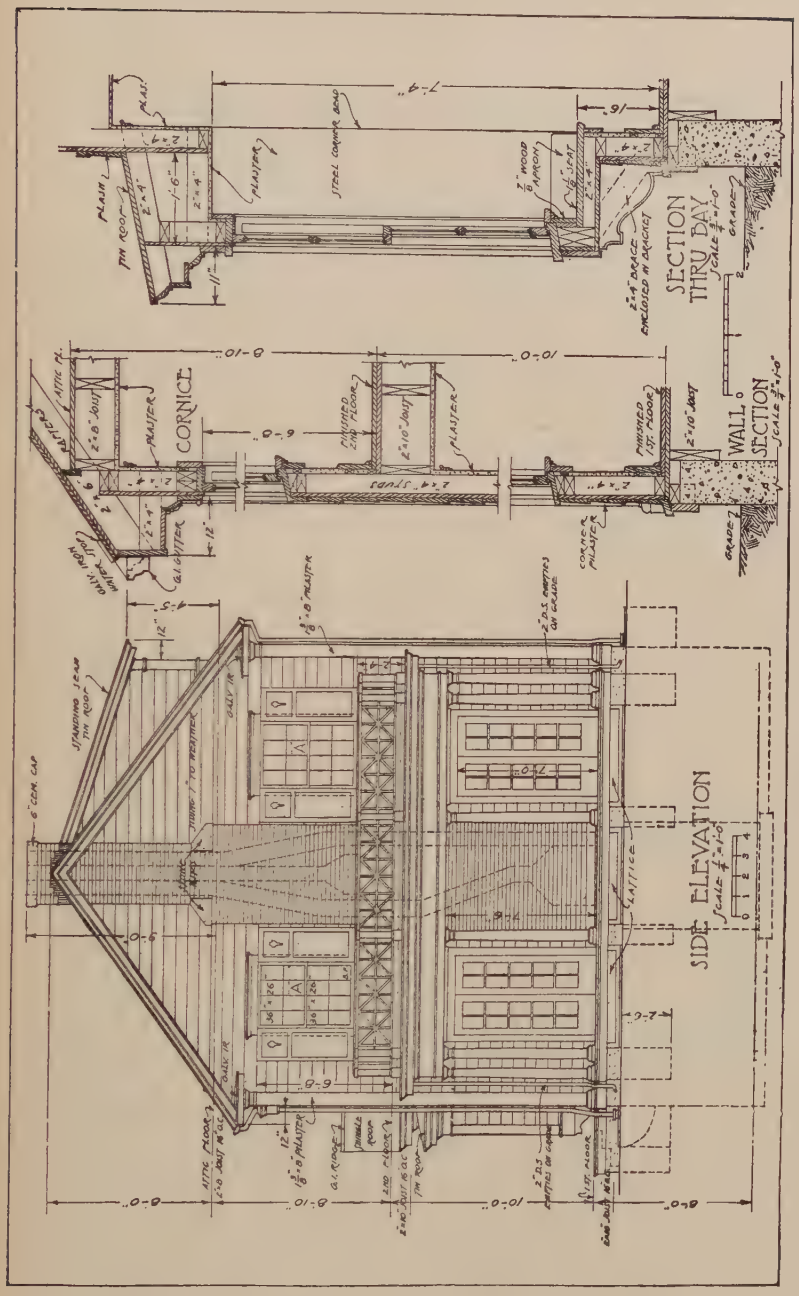

Fig. 604.—Side elevation and wall sections.

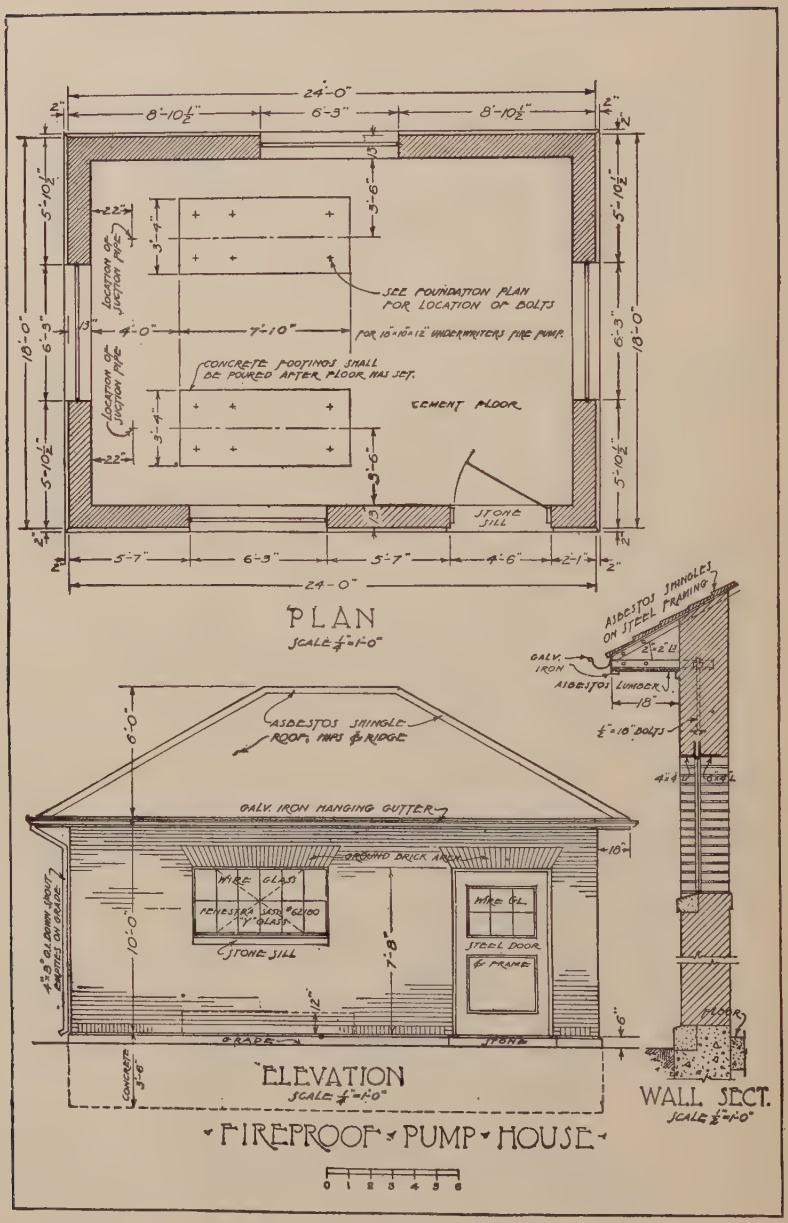

FIG. 605.—A pump house.

space are indicated. The first floor plan is made first and the outlines for basement plan, second floor plan etc., traced or drawn from it.

270. Elevations.—An elevation is a vertical projection showing the front, side or rear view of a structure. When a plan is irregular other elevations parallel to the walls are necessary. The elevation gives the floor heights, openings and exterior treatment. The visualizing power must be exercised to imagine the actual appearance or perspective of a building from its elevations. Roofs in elevation are thus often misleading to persons unfamiliar with drawings as their appearance in projection is so different from the real appearance of the building when finished. Figures 603 and 604 illustrate what features are shown and what dimensions are given on elevations. The pump house, Fig. 605, shows the typical treatment of plan and elevation of this class of buildings.

271. Drawing an Elevation.—First draw a wall section at the side of the sheet, starting with the foundation and showing grade line, floor heights, sill and head of windows, cornice and pitch of roof, and thickness of walls. Carry the grade line across the sheet as the working base line. Project the floor and ceiling lines across lightly. With the plan sheet placed above the elevation project down for widths. Locate the windows, and complete the elevations as shown in the figures.

272. Sections.—A general section is an interior view on a vertical cutting plane to show interior construction and architectural treatment. This cutting plane, as with the horizontal, need not be continuous but may be staggered so as to include as much information as possible. In a simple structure, a part section or "wall section" shown with the elevation either to the same scale or larger, as in Figs. 604 and 605, is often sufficient to give the required vertical dimensions. Part sections to larger scale are often used in connection with drawings, as for example in Figs. 606 and 607, the usual cutting plane line indicating the location and direction of the sectional view.

273. Detail Drawings.—A set of drawings will contain in addition to the plans, elevations and sections, larger scale drawings of such parts as are not indicated with sufficient definiteness on the small-scale drawings. Stair details and detail sections of various items, such as footings, windows, framing, etc., may be shown clearly to the scales of $\frac{3}{4}''$ or $1\frac{1}{2}''$ to $1'$. Details are best

grouped so that each sheet contains the references made on one sheet of the general drawings.

As the building progresses the drawings are supplemented by full-size drawings of mouldings and millwork details, ornamental iron, etc., usually made in soft pencil on tracing paper and

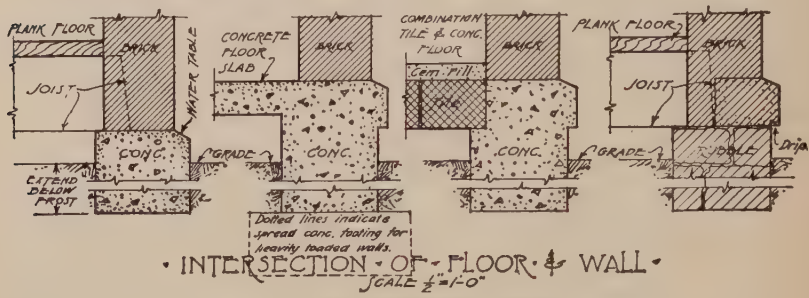

Fig. 606.—Foundation details.

blueprinted; and all of which must be checked carefully by measurements on the building.

Figure 608 illustrates a method of combining views sometimes used for compactness and convenience in projecting.

274. Details of Building Construction.—The engineer and architect are mutually dependent. In building, such questions

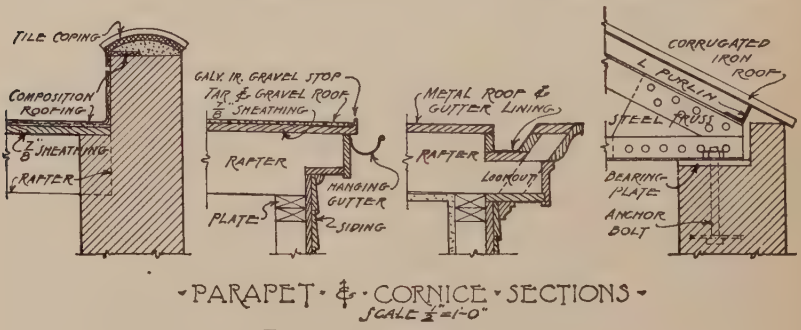

Fig. 607.—Cornice details.

as strength, mechanical apparatus and construction, are engineering problems, while plan and exterior design are architectural problems.

In the design of a building for engineering or manufacturing purposes there are many considerations involved which the architect cannot be expected to know. The young engineer should be able to prepare preliminary layouts or to make drawings for

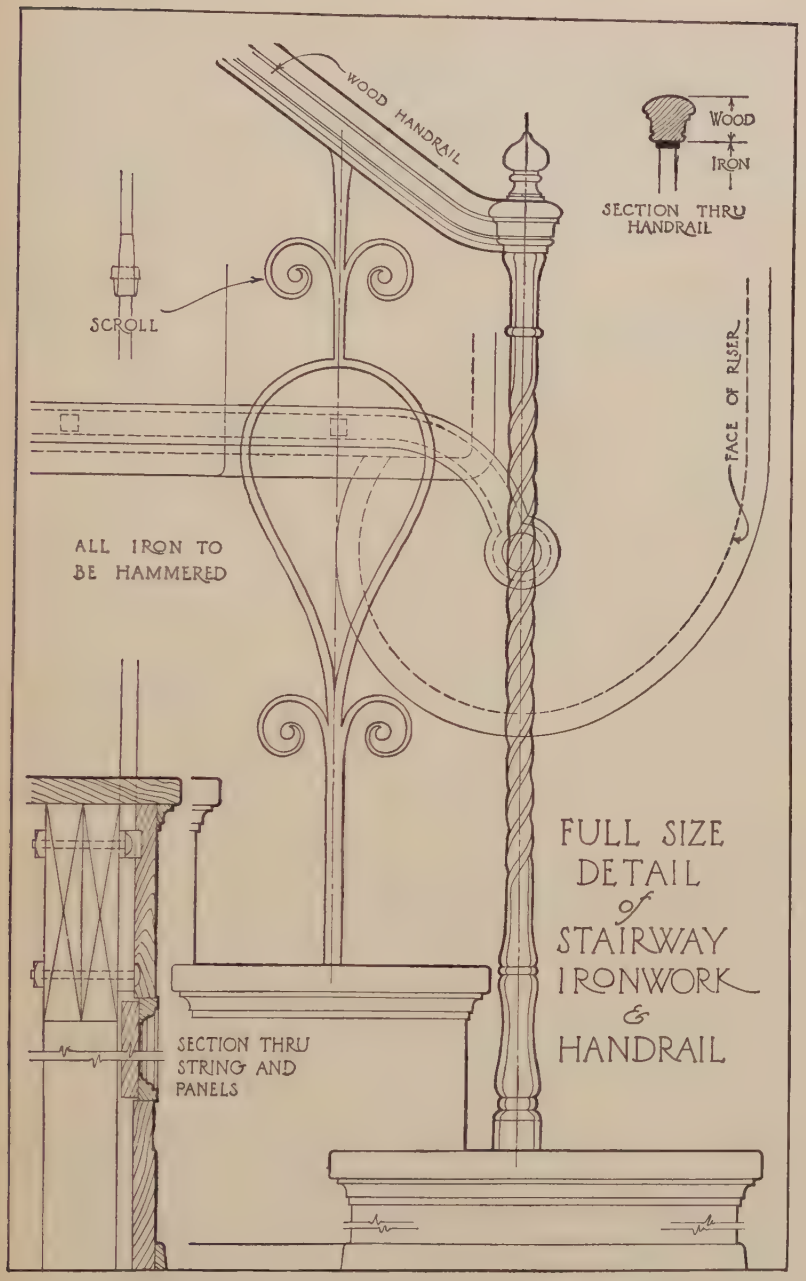

Fig. 608.—Detail showing superposed view and profiling.

simple plant buildings. A few parts of such drawings are included here to suggest the method of representation, and the names of the different pieces are given.

Different forms of foundation, floor and wall construction, for buildings without basement, are shown in Fig. 606. Details of the method of making connection between walls and different kinds of roofs are shown in Fig. 607. Column details may be

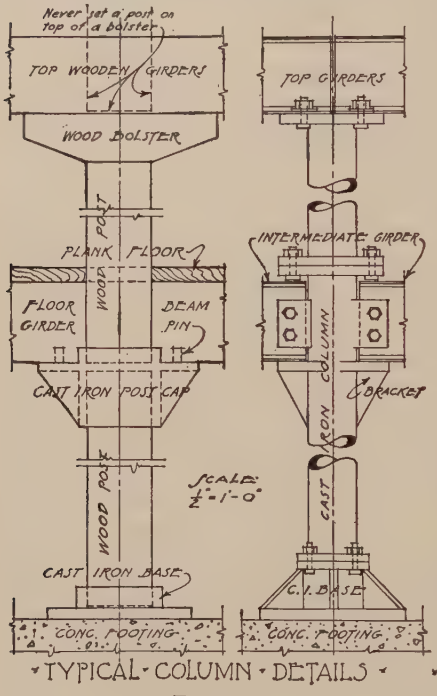

Fig. 609.

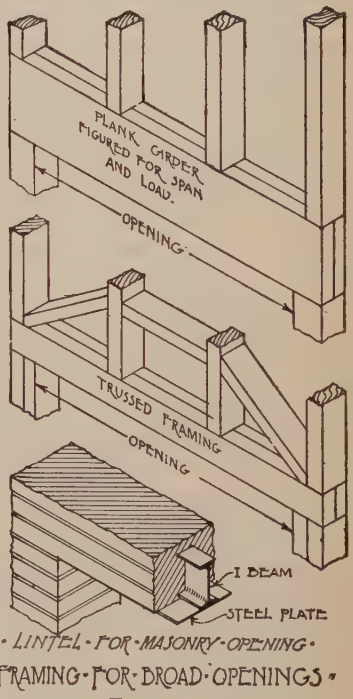

Fig. 610.

represented as in Fig. 609 where the lower and upper end floor connections are illustrated. Part of the details for large openings in both brick and frame walls are given in Fig. 610.

A part of an elevation of one "bent" of a wooden factory building, showing the sizes and locations of the different timbers, is shown in Fig. 611. Similar drawings may be required for floor and roof framing. The extent of detail on such drawings varies, but in all cases it is necessary to have all the information either on the drawings or in the specifications so that there will be no possibility of misunderstanding after the work is started.

275. Special Features.—In modern building construction many parts are used which are manufactured by firms specializing in one particular item. As an example, steel sash details vary with different makes. The architect gets full-size details from the makers and draws his building to conform. Similarly, other items such as ventilating fans, stock stairways, fire doors and many other special features are always worked out from drawings furnished by the manufacturers of the equipment.

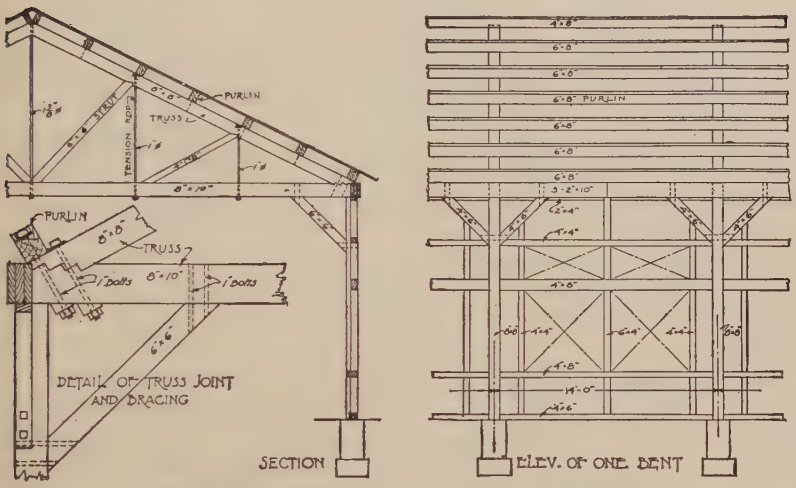

FIG. 611.—One bent, single story shop building.

276. Symbols.—As heretofore stated, plans are largely made up of symbols. Walls are shown by double lines giving their thickness. Symbols for walls in plan and elevation are shown in Fig. 612. The conventional method of representing windows, and their derivation from the actual sections are shown in Fig. 613. Doors and casement windows are given in Fig. 614. The standard symbols for wiring plans will be found on page 447. Symbols for toilets, sinks, floor drains etc., may be found on the floor plans, Figs. 600, 601, 602.

277. Dimensioning.—The correct dimensioning of an architectural drawing requires first of all a knowledge of the methods of building construction. The dimensions should be placed so as to be the most convenient for the workman, should be given to and from accessible points, and chosen so that commercial variation in the sizes of materials will not affect the general

dimensions. The principles of dimensioning found in Chapter X are in general applicable to architectural drawing. A study of the dimensioning on the drawings in this chapter will be of much

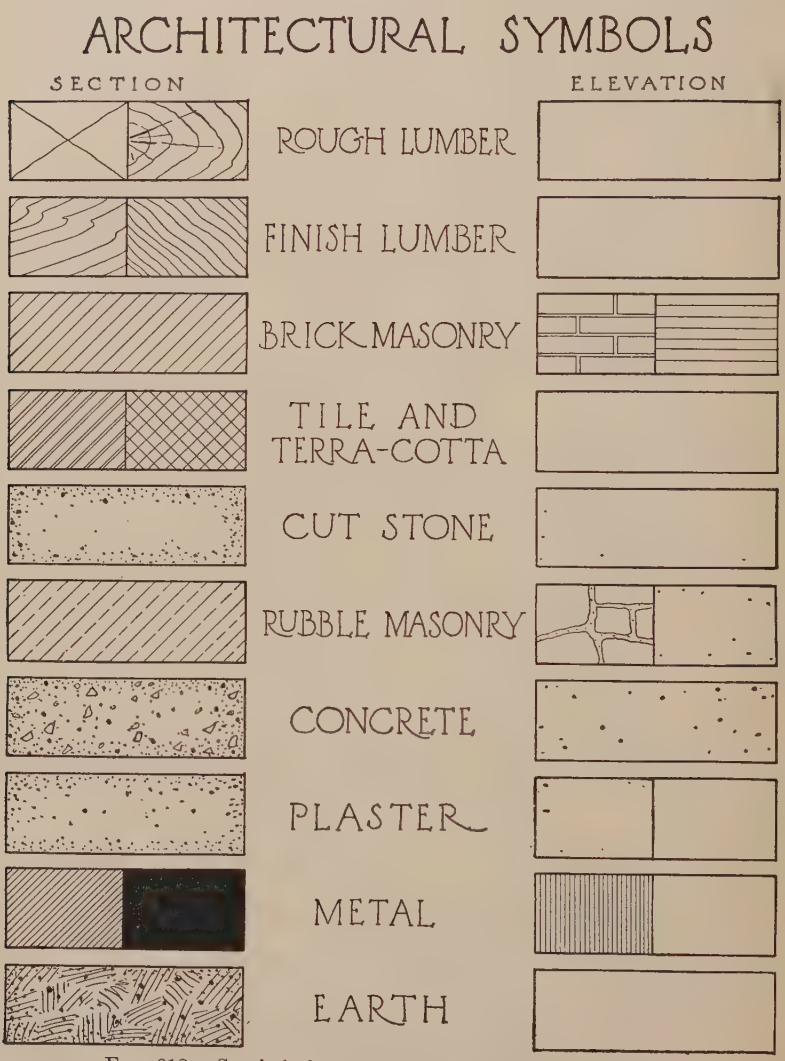

Fig. 612.—Symbols for materials in section and elevation.

value. It will be noted that dimensions are kept outside the plans; that they are given to the outside face of masonry walls; to the center lines of door and window openings, frame partitions,

beams and columns; to the outside of studs in outside frame walls; and that only vertical dimensions and glass sizes are given on elevations.

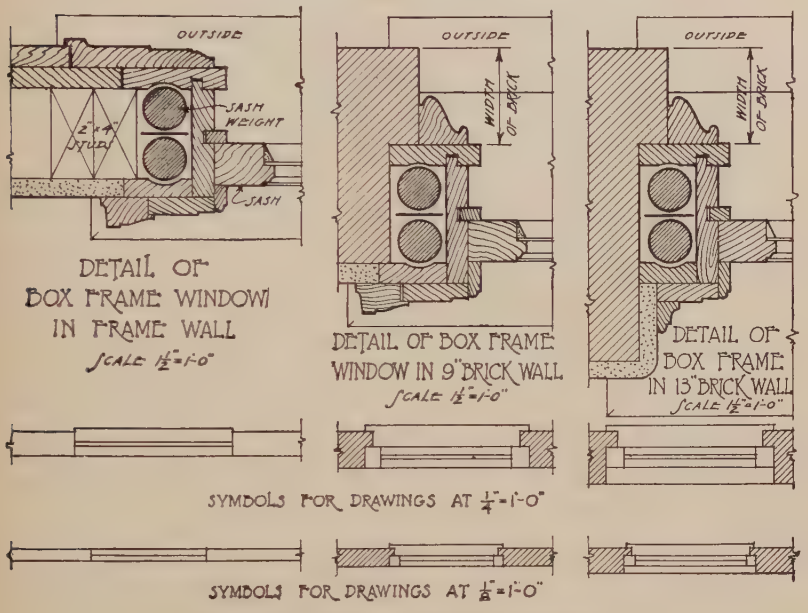

Fig. 613.—Window sections and symbols.

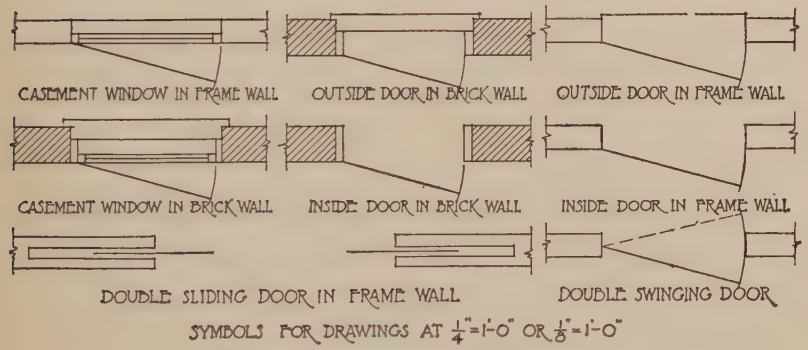
CASEMENT WINDOW IN FRAME WALL
OUTSIDE DOOR IN BRICK WALL
OUTSIDE DOOR IN FRAME WALL
CASEMENT WINDOW IN BRICK WALL
INSIDE DOOR IN BRICK WALL
INSIDE DOOR IN FRAME WALL
DOUBLE SLIDING DOOR IN FRAME WALL
DOUBLE SWINGING DOOR
SYMBOLS FOR DRAWINGS AT ¼"=1'-0" OR ⅛"=1'-0"

Fig. 614.—Symbols for doors.

278. Notes and Specifications.—The statement that the specifications contained the notes of explanation does not at all imply that no notes are to be placed on the drawings. On the other

hand, there should be on architectural working drawings clear, explicit notes in regard to material, construction and finish even though repeated more fully in the specifications. The builders are apt to overlook a point mentioned only in the specifications but as they are using the drawings constantly will be sure to see a reference or note on the drawing of the part in question.

279. Checking.—Architectural drawings require careful checking. As the draftsman develops the drawings he checks back and forth continually. Before going to the tracer the design of all structural parts should be checked for strength and fitness, the drawings checked for accuracy of draftsmanship, and to see that all special requirements of the client are embodied (these should all be on record in writing).

Tracings should be checked by a responsible checker, marking all dimensions with a check mark in soft or blue pencil, checking mistakes with red pencil or correcting when found. All checking should be done in a definite order, following each item through separately and systematically. This order will be dictated by the checker's preference or by conditions of the problem. The following is suggested as a guide:

1. Check main over-all dimensions on the plans, seeing that all plans agree.
2. Check location dimensions on plans, seeing that openings line up vertically, and that plan axes (center lines) "carry through" with openings designed to be on axes.
3. See that dimensions of construction and finish on details correspond to those on plans and fit into adjacent features. Large-scale details made as the work progresses must be checked to measurements made at the building.
4. Check stair dimensions carefully both as to "rise" and "run," and to "head-room" at close places.
5. Check all vertical dimensions on elevations and vertical sections.
6. Check glass sizes of windows and glazed doors.
7. Check all door sizes, and see that doors are completely described either by note, drawing or specification.
8. Check design, length and notation of steel lintels over windows and doors as shown on elevations, and compare with large-scale details.
9. Check sizes and locations of all ducts and flues.
10. Check location and kind of wiring outlets.
11. Check for clearances for all mechanical equipment, including heating, ventilating, plumbing, wiring.
12. See that all notes are complete and accurate.
13. Check the titles for correctness of statement and spelling.

14. Check specifications for typographical errors.

15. Check the specifications with the drawings. While the specifications ordinarily take precedence over the drawings there should be no discrepancy.

16. Check specifications to see that all fixtures and apparatus for plumbing, heating and lighting systems are specified.

17. Check for conformity with building codes and laws.

280. Lettering.—There are two distinct divisions in the use of lettering by the architect, the first *Office Lettering*, including all the titles and notes put on the drawings for information, the second *Design Lettering* covering drawings of letters to be executed in stone or bronze or other material in connection with design.

The Old Roman is the architect's one general purpose letter which serves him, with a few exceptions, for all his work in both divisions. It is a difficult letter to execute properly, and the draftsman should make himself thoroughly familiar with its construction, character and beauty before attempting to design inscriptions for permanent structures, or even titles.

281. Titles.—Titles on display drawings are usually made in careful Old Roman either in outline or solid. One alphabet is

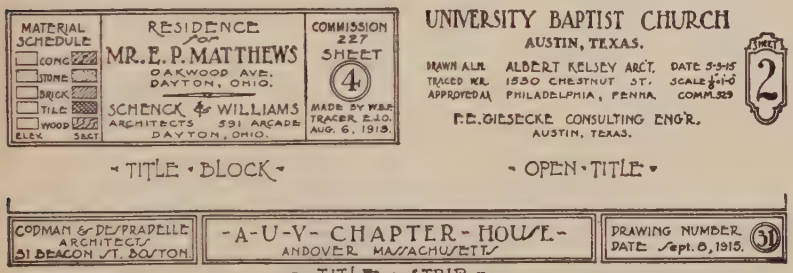

FIG. 615.—Titles reduced from architectural drawings.

given in Fig. 92. On working drawings a rapid single stroke based on Old Roman such as Fig. 94 is used.

An architectural title should contain part or all of the following items:

1. Name and location of structure.
2. Kind of view, as roof plan, elevation (sometimes put elsewhere on the sheet).
3. Name and address of owner or client.
4. Date.
5. Scale.
6. Name and address of architect.

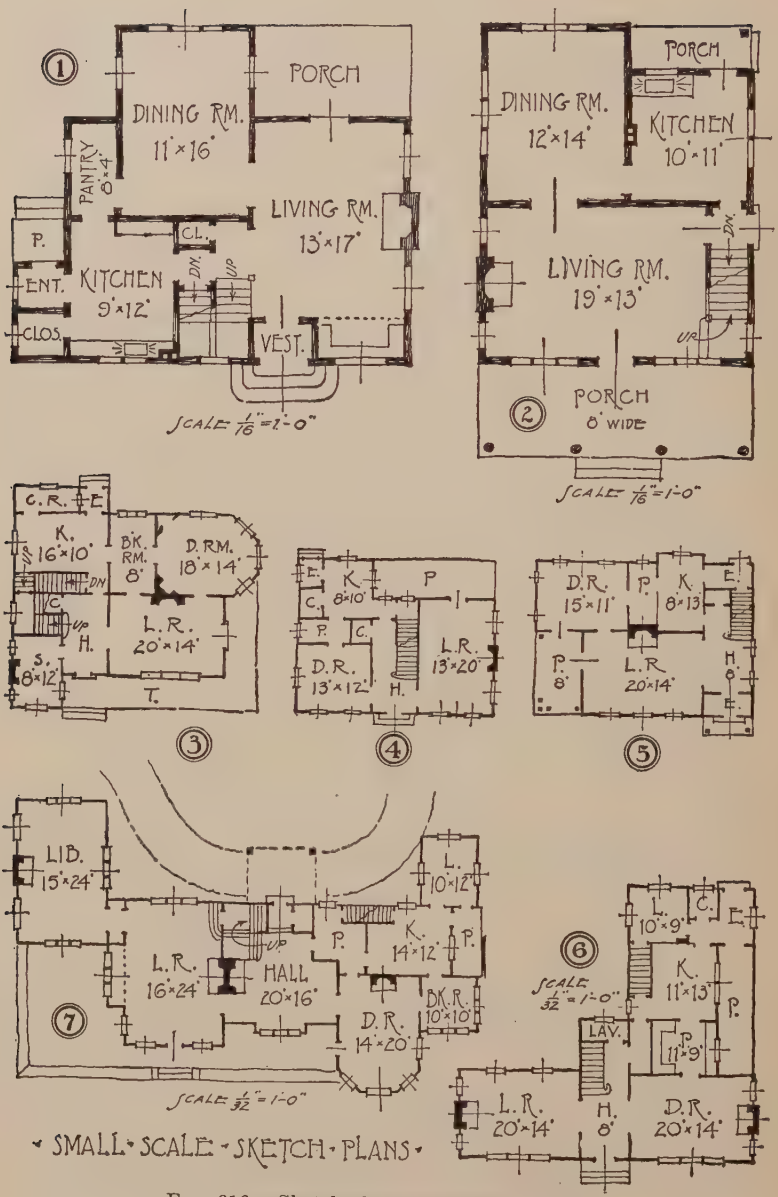

FIG. 616.—Sketch plans for problem studies.

FIG. 617.—Perspective sketches for problem studies.

7. Number (in set).
8. Key to materials.
9. Office record.
10. For public buildings space for signed approval of commissioners.

Three examples of working drawing titles are shown in Fig. 615.

PROBLEMS

The sketch plans given in Fig. 616 with the corresponding perspective sketches of Fig. 617 are given as suggestions from which complete working plans may be drawn.

CHAPTER XVI

The Elements of Structural Drawing

282. Structural drawings differ from other drawings only in certain details and practices which have developed as peculiar to the materials worked with and their method of fabrication. The differences are so well established that it is essential for any engineer to know something of the methods of representation in use in structural work.

Steel structures are made up of "rolled shapes" put together permanently by riveting or welding. The function of a structural drawing is to show the shapes and sizes used, and the details of

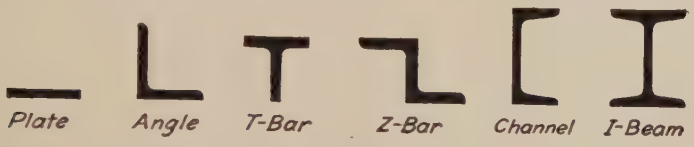

Fig. 618.—Sections of rolled shapes.

fastening. Sections of the usual structural shapes are shown in Fig. 618. The dimensions of the various sizes of standard steel shapes, together with much other information with which the structural draftsman must be familiar, are given in the various structural steel handbooks. For wooden structures, where the parts are not so completely standardized, complete details and dimensions of every part are desirable.

A glossary of terms used in structural drawing is given in the Appendix, page 454.

283. Classification.—Professor Ketchum[1] has classified and described the drawings for structures as follows:

1. General Plan.—This will include a profile of the ground; location of the structure; elevations of ruling points in the structure; clearances; grades; (for a bridge) direction of flow, high water, and low water; and all other data necessary for designing the substructure and superstructure.

[1] "Structural Engineers' Handbook" by Milo S. Kecthum.

2. Stress Diagram.—This will give the main dimensions of the structure, the loading, stresses in all members for the dead loads, live loads, wind loads, etc., itemized separately; the total maximum stresses and minimum stresses; sizes of members; typical sections of all built members showing arrangement of material, and all information necessary for the detailing of the various parts of the structure.

3. Shop Drawings.—Shop detail drawings should be made for all steel and iron work and detail drawings of all timber, masonry and concrete work.

4. Foundation or Masonry Plan.—The foundation or masonry plan should contain detail drawings of all foundations, walls, piers, etc., that support the structure. The plans should show the loads on the foundations; the depths of footings; the spacing of piles where used; the proportions for the concrete; the quality of masonry and mortar; the allowable bearing on the soil, and all data necessary for accurately locating and constructing the foundations.

5. Erection Diagram.—The erection diagram should show the relative location of every part of the structure; shipping marks for the various members; all main dimensions; number of pieces in a member; packing pins; size and grip of pins, and any special feature or information that may assist the erector in the field. The approximate weight of heavy pieces will materially assist the erector in designing his falsework and derricks.

6. Falsework Plans.—For ordinary structures it is not common to prepare falsework plans in the office, this important detail being left to the erector in the field. For difficult or important work erection plans should be worked out in the office, and should show in detail all members and connections of the falsework, and also give instructions for the successive steps in carrying out the work. Falsework plans are especially important for concrete and masonry arches and other concrete structures, and for forms for all walls, piers, etc. Detail plans of travelers, derricks, etc., should also be furnished the erector.

7. Bills of Material.—Complete bills of material showing the different parts of structure with its mark, and the shipping weight should be prepared. This is necessary in checking up the material to see that it has all been shipped or received, and to check the shipping weight.

8. Rivet List.—The rivet list should show the dimensions and number of all field rivets, field bolts, spikes, etc., used in the erection of the structure.

9. List of Drawings.—A list should be made showing the contents of all drawings belonging to the structure.

284. General Drawings.—The general drawings correspond in many respects to the design drawings and assembly drawings of the mechanical engineer, and include the general plan, stress diagram and erection diagram. In some cases the design drawing is worked out completely by the engineer, giving the sizes and weights of members and the number and spacing of all rivets. In other cases the general dimensions, positions and sizes of the members and the number of rivets is shown, leaving the details

to be worked out in the shop or to be given on separate complete detail shop drawings.

In order to show the details clearly the structural draftsman often uses two scales in the same view, one for the center lines or skeleton of the structure, showing the shape, and a larger one for the parts composing it. The scale used for the skeleton is determined by the size of the structure as compared to the sheet; $\frac{1}{4}''$, $\frac{3}{8}''$ and $\frac{1}{2}''$ to one foot are commonly used. Shop details are made $\frac{3}{4}''$, $1''$ or $1\frac{1}{2}''$, and for small details $3''$ to the foot.

Figure 619 is a typical drawing of a small roof truss, giving complete details. Such drawings are made about the working lines which were used in calculating the stresses and sizes of the members. These lines form the skeleton, as illustrated separately to small scale in the "box" on the figure. The length of each working line is figured accurately and from it the intermediate dimensions are obtained.

The erection diagram is often put on the same sheet as the truss.

When one-half of a truss only is shown it is always the left end, looking toward the side on which the principal connections are made.

285. Detail Drawings.—Separate drawings made to a sufficiently large scale to carry complete information are called "shop detail drawings." All parts are shown to scale, noting particularly that rivets and rivet heads are drawn accurately to scale. When possible, all members are shown in the position which they will occupy in the completed structure, vertical, horizontal or inclined. Long vertical or inclined members may be drawn horizontally, a vertical member always having its lower end at the left, and an inclined member drawn in the direction it would fall. Except in plain building work a diagram to small scale, showing by a heavy line the relative position of the member in the structure, should be drawn on every detail sheet.

Figure 620 is a beam detail, giving all the information for five different beams in one drawing, and illustrating the method of representing a bent plate. It is obvious that in such a drawing the lengths are not to scale.

As the various members are detailed they are given a mark, such as *B1 — 32* (*B*, for beam; *1*, the shop number, and *32* the sheet number of the detail drawing), for identification in assembling.

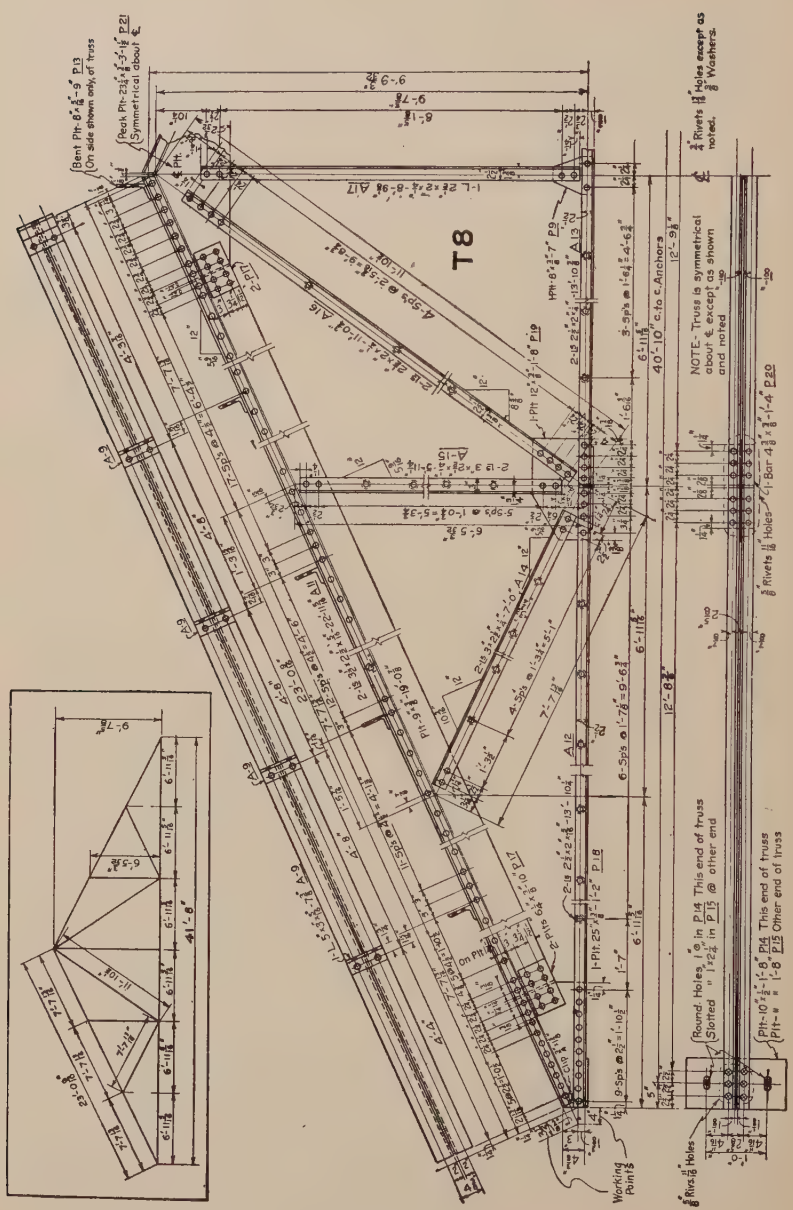
T8
NOTE- Truss is symmetrical about ℄ except as shown and noted
℄ Rivets 7/8" Holes except as noted. 7/8" Washers.
40'-10" c. to c. Anchors
12'-9 1/2"
Working Points
Round Holes 1 1/8" in P14 This end of truss
Slotted " 1"x2 1/4" in P15 @ other end
Pth-10'-1 1/2"-1 1/8" P14 This end of truss
Pth-" "-1 1/8" P15 Other end of truss
Rivets 7/8" Holes
Rivets 7/8" Holes
Bar 4"x 3/4"-1'-4" P20
Peak Pth-23'-4 1/2"-3'-1 1/2" P21 (Symmetrical about ℄)
Bent Pth-8'-4 1/2"-9" P13 (On side shown only, of truss)

FIG. 619.—Structural working drawing. Roof truss.

286. Structural Drawing Practice.—The standard size of sheet for structural drawings is 24″ × 36″ outside, with a half-inch border. In a number of drafting rooms a second half-inch border is drawn inside and the first one used as the trimming line for blue prints. Inked outlines should be of sufficient weight to make the main material stand out distinctly, while dimension lines and gage lines are made in very fine full lines in black. Some prefer red ink for dimension and gage lines. This makes the tracing somewhat easier to read, but the prints are not so satisfactory, and red ink is not permanent. When new work is to be attached to old, the old is often drawn in red.

Dimensions are always placed over the dimension line instead of in the line. Lengths of 10 inches and over are given in feet

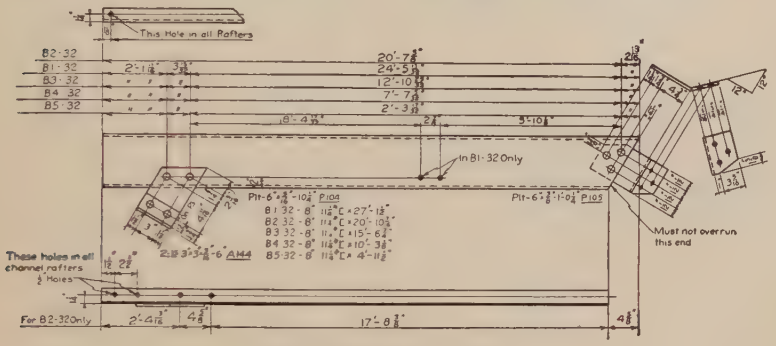

Fig. 620.—Beam detail.

and inches, thus, 0′ − 10″, 1′ − 2½″. Care should be taken that dimensions are given to commercial sizes of materials. Sizes of members are specified by figures parallel to them, as 2∠s 2½″ × 2″ × ¼″ × 7′ − 3″, which means two angles having unequal legs of 2½″ and 2″, ¼″ thick and 7′ − 3″ long. Angle or bevel cuts, as for gussets, are indicated by their tangents on a 12″ base line. See Fig. 619.

The dimensions necessary for the shapes of Fig. 618 are—

Plates—Width × thickness × length.

Angles—Length of one leg × length of other leg × thickness × length.

T-bars—Height × width × weight, pounds per feet × length.

Z-bars—Height × thickness × weight per feet × length.

Channels—Height × weight per feet × length.

I-*beams*—Height × weight per feet × length.

Checking is usually indicated by a dot in red ink placed under the dimension. Elevations, sections and other views are placed by the theory of third angle projection except that when a view is given under a front view, as in Figs. 619 and 620, it is made as a section taken above the lower flange, looking down, instead of as a regular bottom view looking up. Large sections of materials are shown with uniform cross-hatching. Small-scale sections are blacked in solid, leaving white spaces between adjacent pieces.

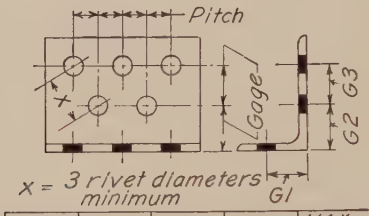

LEG	G1	G2	G3	MAX. RIVET
8	4½	3	3	1⅛
7	4	2½	3	1
6	3½	2½	2¼	⅞
5	3	2	1¾	⅞
4	2½			⅞
3½	2			⅞
3	1¾			⅞
2½	1⅜			¾
2	1⅛			⅝
1¾	1			½
1½	⅞			⅜
1⅜	⅞			⅜
1¼	¾			⅜
1	⅝			¼
¾	½			¼

Fig. 621.—Gage and pitch.

Rivets are spaced along "gage lines," measured from the backs of angles and channels and from center to center on I-beams. The distance between rivets measured along the gage line is called the pitch. The gages and pitch for various angles are shown in Fig. 621.

The size of most structures prevents their being completed in the shop so they are "fabricated" as large as transportation facilities allow, and the necessary connections made where the structure is erected. The holes for these "field rivets" are always indicated in solid black to scale on the drawing, while

shop rivets are indicated by circles of the diameter of the rivet head. A bill of field rivets is always furnished. In drawing rivets, the drop pen, Fig. 707, is a favorite instrument.

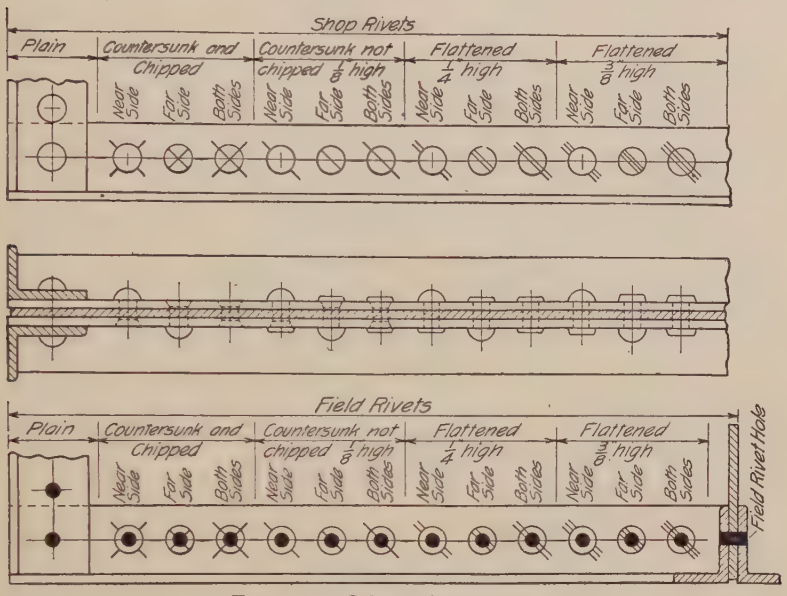

FIG. 622.—Osborn rivet symbols.

A general note is usually added to all detail drawings, giving rivet sizes, size of open holes and edge distance (unless noted) and painting instructions, as "Paint one coat of red lead (or black graphite) in shop. Paint all parts in contact before assembly."

Figure 622 shows the Osborn symbols for riveting, which are so universally used that no key on the drawing is necessary. Figure 623 shows rivets to larger scale.

There is a growing use of arc welding instead of riveting for structural work. See page 240.

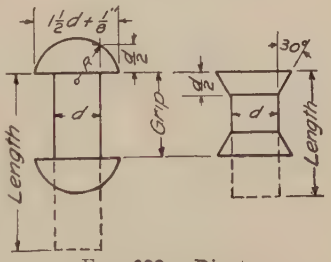

FIG. 623.—Rivets.

Bent plates should be developed and the "stretchout" length of bent forged bars given. The length of a bent plate may be taken as the inside length of the bend plus half the thickness of the plate for each bend.

A *bill of material* always accompanies a structural drawing. This may be put on the drawing but the best practice is to attach it as a separate "bill sheet" generally on $8\frac{1}{2}'' \times 11''$ paper.

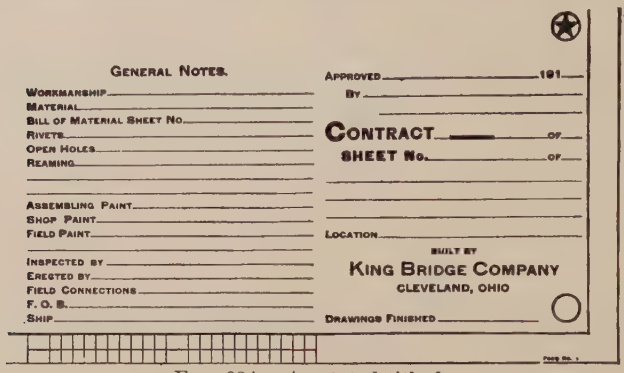

FIG. 624.—A printed title form.

Each member of a structure is given a shipping mark consisting of a capital letter and a number, which appears on the drawings and on the bill sheet. See Figs. 619 and 620.

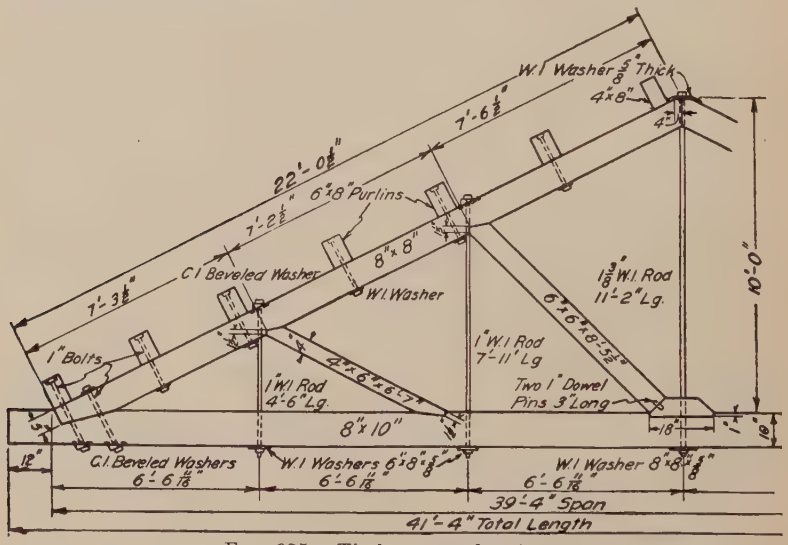

FIG. 625.—Timber truss drawings.

Lettering is done in rapid single stroke either inclined or vertical. An example of a printed title form is given in Fig. 624.

287. Timber Structures.—The representation of timber-framed structures involves no new principles, but requires par-

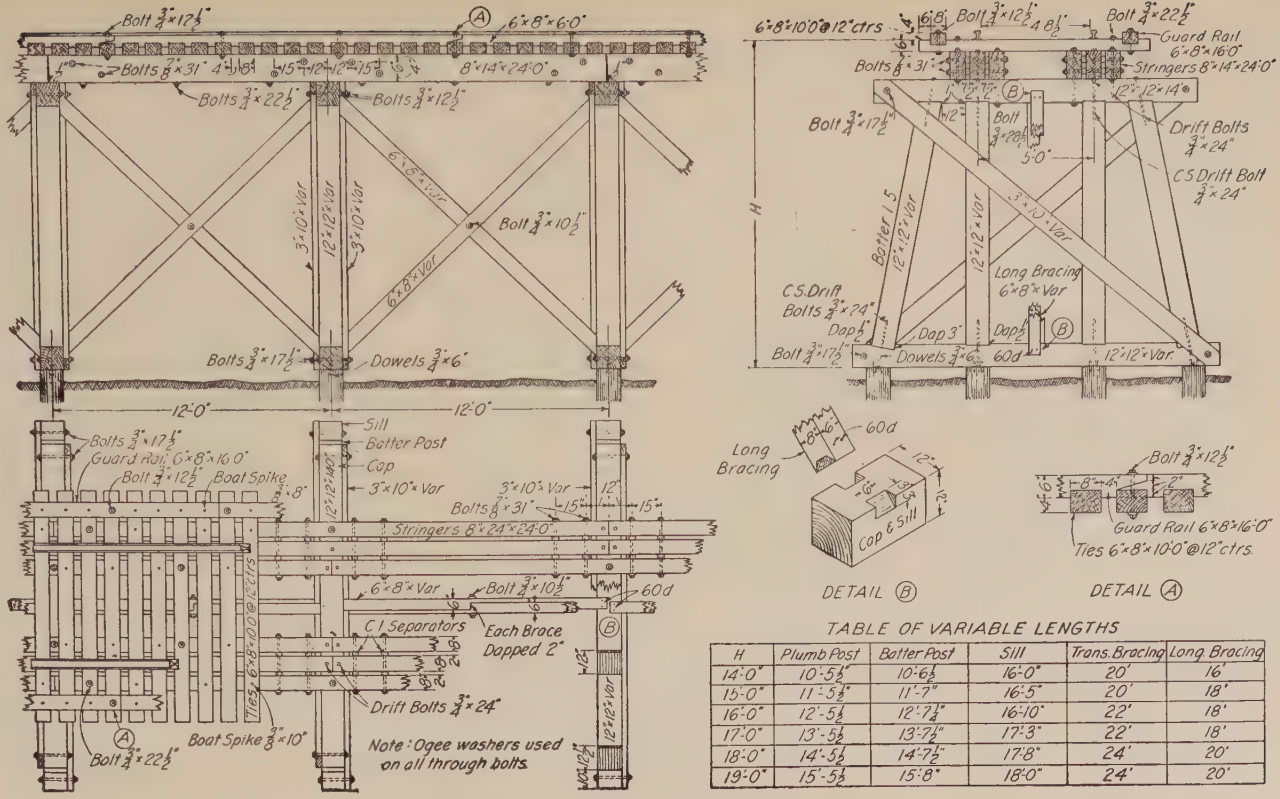

TABLE OF VARIABLE LENGTHS

H	Plumb Post	Batter Post	Sill	Trans. Bracing	Long. Bracing
14'-0"	10'-5½"	10'-6½"	16'-0"	20'	16'
15'-0"	11'-5⅞"	11'-7"	16'-5"	20'	18'
16'-0"	12'-5⅞"	12'-7¼"	16'-10"	22'	18'
17'-0"	13'-5⅞"	13'-7¼"	17'-3"	22'	18'
18'-0"	14'-5⅞"	14'-7½"	17'-8"	24'	20'
19'-0"	15'-5⅞"	15'-8"	18'-0"	24'	20'

FIG. 626.—Wooden railroad trestle.

ticular attention to details. Timber members are generally rectangular in section and are specified to nominal sizes in even inches, as 8″ × 12″. As nominal sizes are generally larger than the actual dimensions the general drawing must give center and other important distances accurately. Details drawn to larger scale give specific information as to separate parts. Sizes of wood members vary so much that nothing should be left to "guess in" when erecting. The particulars of joints, splices, methods of fastening, etc., should be given in full. As this requires a specialized knowledge of wood-framing construction, acquired only through large experience in this class of work, it should not be attempted by the novice.

Two scales may sometimes be used to advantage on the general drawing, as was done in Fig. 625.

Fig. 626 shows the construction of a wooden trestle on piles. Timbers of the sizes shown are used for heights up to 20 feet. Complete notes are an essential part of such drawings, especially when an attempt at dimensioning the smaller details would result in confusion.

288. Masonry Structures.—In drawing masonry the symbols used bear some resemblance to the material represented. Figure

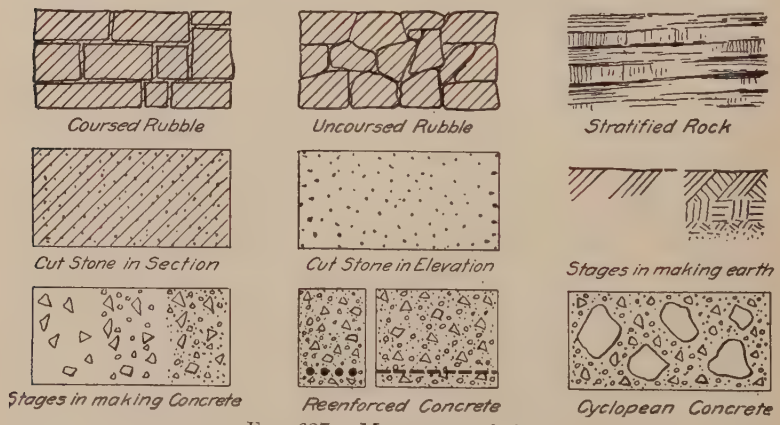

Fig. 627.—Masonry symbols.

627 gives those in common use and shows the stages followed to secure uniformity of effect in rendering earth and concrete. An effective method of cross-hatching, leaving a white line around the edge of the stone is shown in Fig. 628. Drawings for piers, foundations for machines and other structures are met with in

all kinds of engineering work. Grade levels, floor levels and other fixed heights should be given, together with accurate location dimensions for foundation bolts. All materials should be marked plainly with name or notes. A pier is illustrated in Fig. 629.

A division of masonry construction of increasing importance, needing careful attention in representation, is *reinforced concrete*. It is almost impossible to show definitely the shapes and positions of reinforcing bars in concrete by the usual orthographic

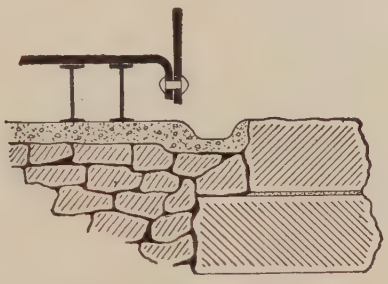

Fig. 628.—Masonry section.

views, without a systematic scheme of marking. In Fig. 630 the various bars are designated by reference letters and numbers on horizontal and vertical center lines. Note the horizontal lines *G* and *F*, and the vertical lines numbered 1, 2, 3, 4, 5. The first bar in the line *G* is called *G*1, the second *G*2, etc., similarly for bars *F*1, *F*2. Each of the bars is marked with its same combination of letter and figure in the other views, and they are detailed in separate bending diagrams, thus completely defining their location and shape. Sometimes the attempt is made to give bending dimensions in the views of the structure but as this greatly increases the difficulty of reading the drawing, it is not good practice.

The usual symbol for concrete in section is used very commonly for reinforced concrete, adding the reinforcing bar sections in heavy black dots, with dashed or full lines for the bars parallel to the section. This, however, gives a very confused appearance. The reinforcing bars can be shown in place much more clearly if the concrete is represented by an even tint instead of using the regular symbol. This tint may be made by section lining in colored ink or in very dilute black ink, or, if the tracing is made on the smooth side of the cloth, by stumping the back with soft

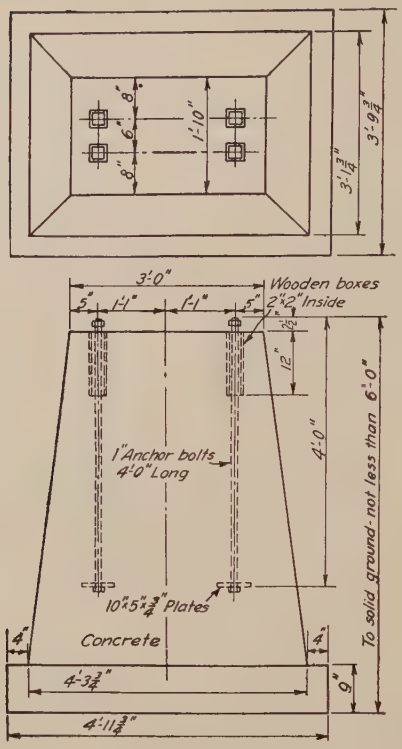

FIG. 629.—Pier drawing.

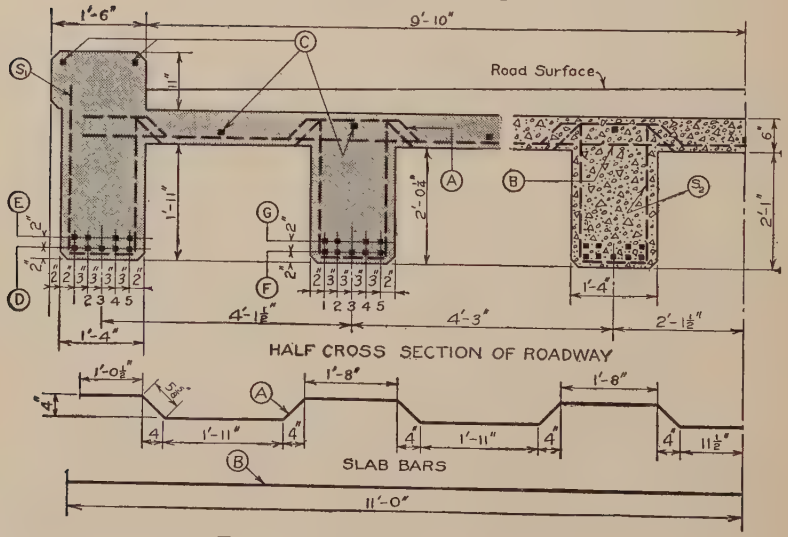

FIG. 630.—Reinforced concrete section.

pencil. Any one of these methods gives a light blue tint on the blue print, and enables the details of the reinforcing (which is the important item) to be shown clearly. The two methods are shown side by side in Fig. 630.

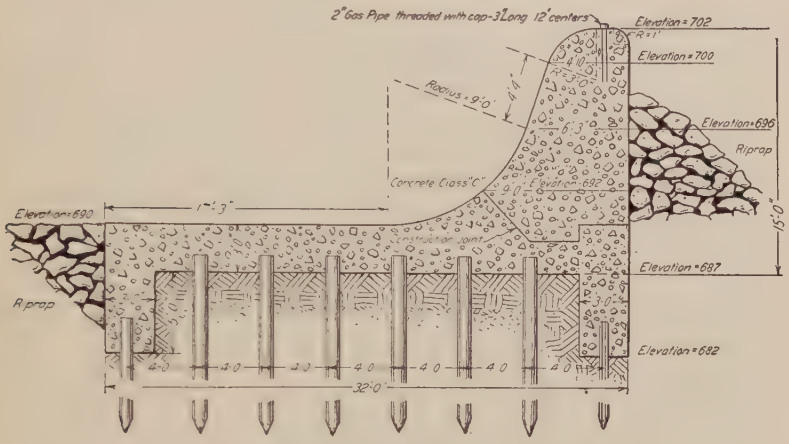

FIG. 631.—Masonry section—weir dam.

Certain classes of engineering structures involve much free-hand rendering, and the ease of reading (usefulness) depends upon the care with which this rendering is done.

The section of a submerged weir, Fig. 631, is an example of this, where there is comparatively little mechanical execution. Any means of "bringing out" the construction, such as surface shading, or use of solid black is legitimate.

CHAPTER XVII

Map and Topographical Drawing

289. Thus far in our consideration of drawing as a graphic language we have had to represent the three dimensions of an object, either pictorially or, in the usual case, by drawing two or more views of it. In map drawing, the representation of features on parts of the earth's surface, there is the distinct difference that the drawing is complete in one view, the third dimension (the height) either being represented on this view, or in some cases omitted as not required for the particular purpose for which the map was made.

The surveying and mapping of the site is the first preliminary work in improvements and engineering projects, and it is desirable that all engineers should be familiar with the methods and symbols used in this branch of drawing. Here again, as in our discussion of architectural drawing, we cannot consider the practice of surveying and plotting, or go into detail as to the work of the civil engineer, but we are interested in his use of drawing as a language, and in the method of commercial execution of plats and topographical maps.

290. Classification.—Maps in general may be classified as follows: 1. Those on which the lines drawn represent imaginary or unreal lines, such as divisions between areas subject to different authority or ownership, either public or private; or lines indicating geometrical measurements on the ground. In this division may be included plats or land maps, farm surveys, city subdivisions, plats of mineral claims.

2. Those on which lines are drawn to represent real or material objects within the limits of the tract, showing their relative location, or size and location, depending upon the purpose of the map. When relative location only is required the scale may be small, and symbols employed to represent objects, as houses, bridges or even towns. When the size of the object is an important consideration the scale must be large and the map becomes a real orthographic top view.

3. Those on which lines or symbols are drawn to tell the relative elevation of the surface of the ground. These would be called relief maps, or if contours are used with elevations marked on them, contour maps.

Various combinations of these divisions may be required for different purposes. A topographic map, being a complete description of an area, would include 1, 2 and 3, although the term may be used for a combination of any two.

291. Plats.—A map plotted from a plane survey, and having the third dimension omitted, is called a "plat" or "land map." It is used in the description of any tract of land when it is not necessary to show relief, as in such typical examples as a farm survey or a city plat.

The plotting is done from field notes, either (1) by latitudes and departures, (2) by bearings and distances, (3) by deflection angles and distances, (4) by the total latitude and departure from some fixed origin and for each separate point (important in mine engineering), (5) by azimuth and distances. Angles are laid off by bearings, by plotting tangents of the angle or sine of half the angle, or by an accurate protractor.

The first principle to be observed in the execution of this kind of drawings is *simplicity*. Its information should be clear, concise and direct. The lettering should be done in single stroke, and the north point and border of the simplest character. The day of the intricate border corner, elaborate north point, and ornamental title is, happily, past, and all such embellishments are rightly considered not only as a waste of time, but as being in extremely bad taste.

292. Plat of a Survey.—The plat of a survey should give clearly all the information necessary for the legal description of the parcel of land. It should contain:

1. Lengths and bearings of the several sides.
2. Acreage.
3. Location and description of monuments found and set.
4. Location of highways, streams, etc.
5. Official division lines within the tract.
6. Names of owners of abutting property.
7. Title and north point.
8. Certification.

Figure 632 illustrates the general treatment of this kind of drawing. It is almost always traced and blue-printed, and no water-

lining of streams or other elaboration should be attempted. It is important to observe that the size of the lettering used for the several features must be in proportion to their importance.

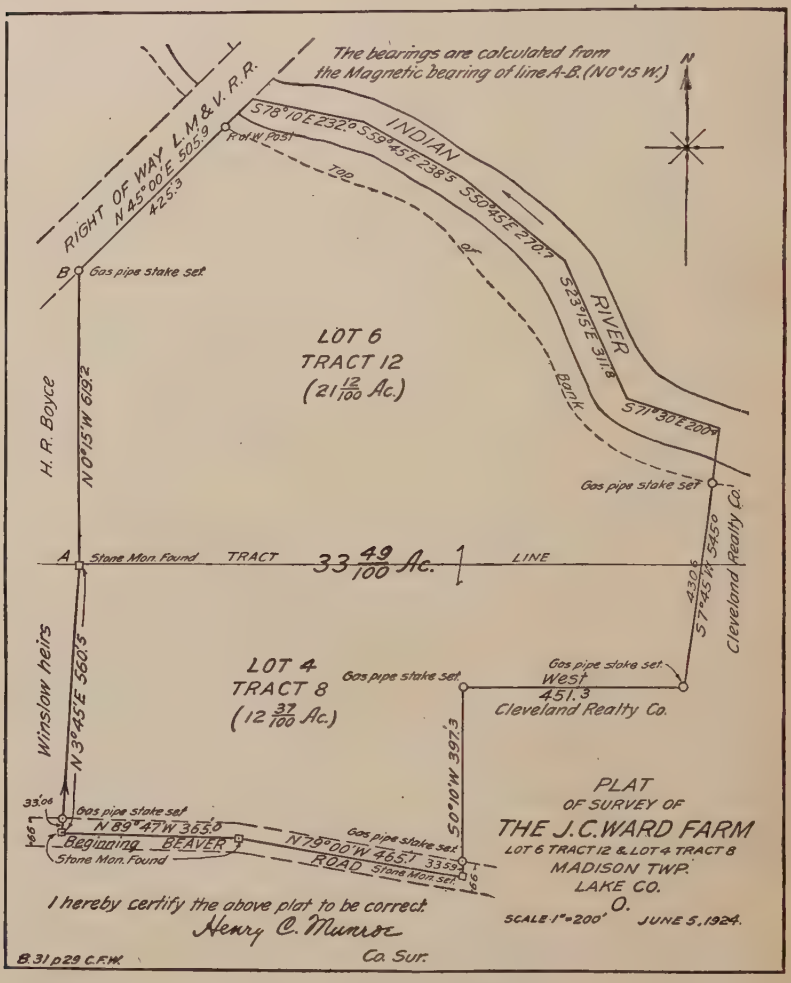

FIG. 632.—Plat of a survey.

293. A Railroad Property Map.—Of the many kinds of plats used in industrial work one only is illustrated here, the portion of a railway situation or station map, Fig. 633. This might represent also a plant valuation map, a type of plat often required. The information on such maps varies to meet the

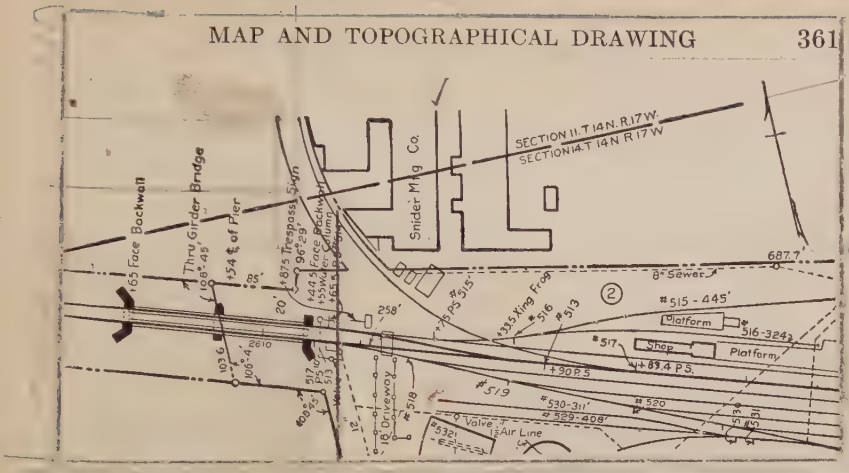

FIG. 633.—Part of a railroad property map.

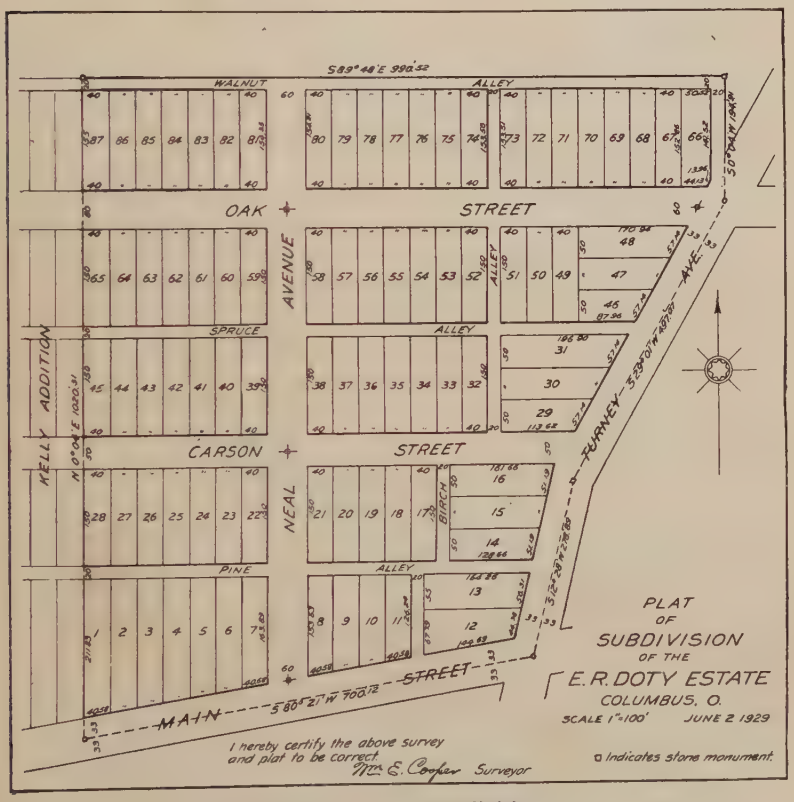

FIG. 634.—A city subdivision.

requirements of particular cases. In addition to the preceding list, it might include such items as pipe lines, fire hydrants, location and description of buildings, railroads and switch points, outdoor crane runways, etc.

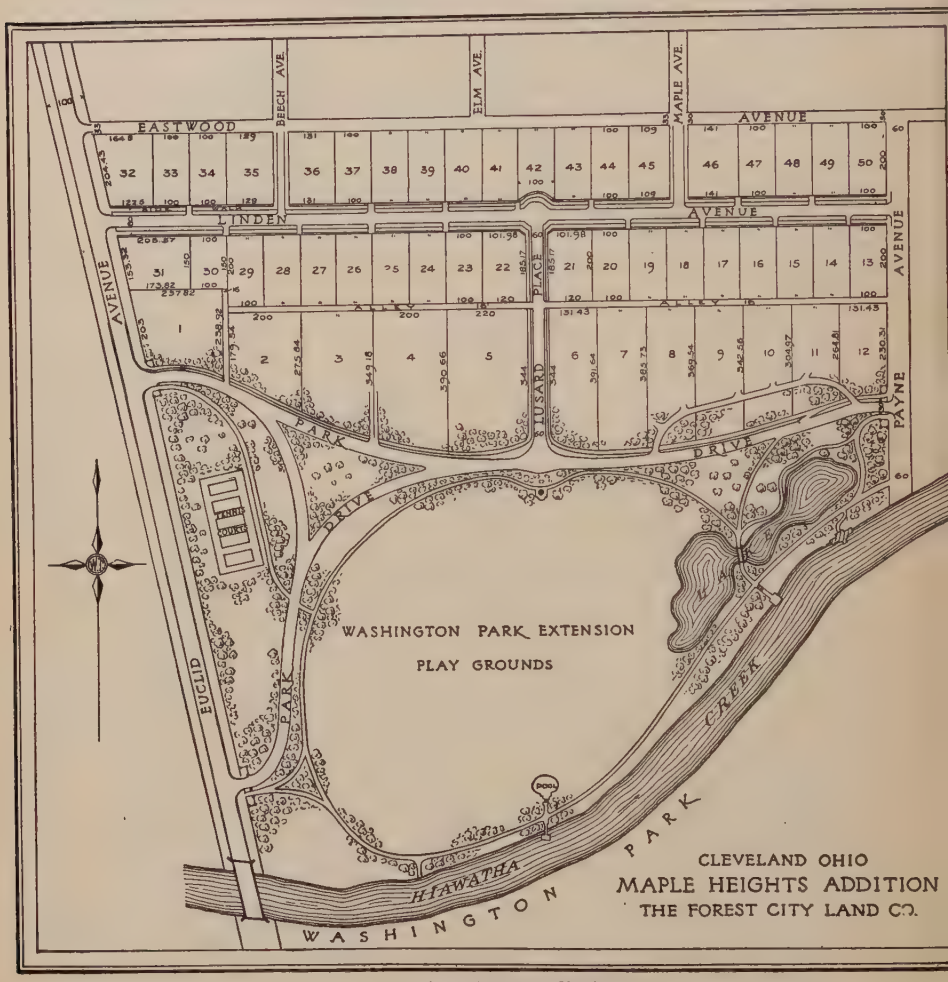

Fig. 635.—A real estate display map.

294. Plats of Subdivisions.—The plats of subdivisions and allotments in cities are filed with the county recorder for record, and must be very complete in their information concerning the location and size of the various lots and parcels composing the

subdivisions, Fig. 634. All monuments set should be shown and all measurements of lines and angles given, so that it will be possible to locate any lot with precision.

Sometimes landowners desire to use these maps in display to prospective buyers, and some degree of embellishment is allowable, but care must be taken not to overdo the ornamentation. These drawings are usually finished as blue prints. Figure 635 is an example showing an acceptable style of execution and finish.

When required for reproduction to small size for illustrative purposes a rendering such as shown in Fig. 636 is sometimes effective.

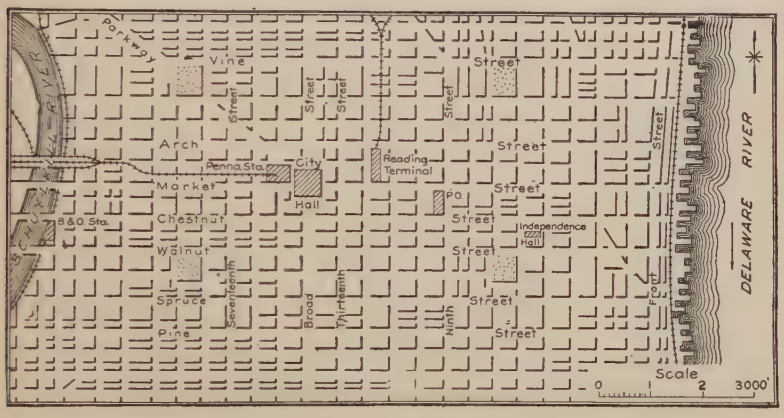

FIG. 636.—A shade line map.

295. City Plats.—Under this head is included chiefly maps or plats drawn from subdivision plats or other sources for the record of city improvements. These plats are used for the record of a variety of information, such as, for example, the location of sewers, water mains, street railways, and street improvements.

One valuable use is in the levying of assessments for street paving, sewers, etc. As they are made for a definite purpose they should not contain unnecessary information, and hence will not include all the details as to sizes of lots, location of monuments, etc., which are given on subdivision plats. They are usually made on mounted paper and should be to a scale large enough to show clearly the features required, 100 and 200 feet to the inch are common scales, and as large as 50 feet is sometimes used. For smaller cities the entire area may be covered by one

map; in larger cities the maps are made in convenient sections so as to be filed readily.

A study of Fig. 637, a sewer map, will show the general treatment of such plats. The appearance of the drawing is improved by adding shade lines on the lower and right-hand side of the blocks, *i.e.*, treating the streets and water features as depressions.

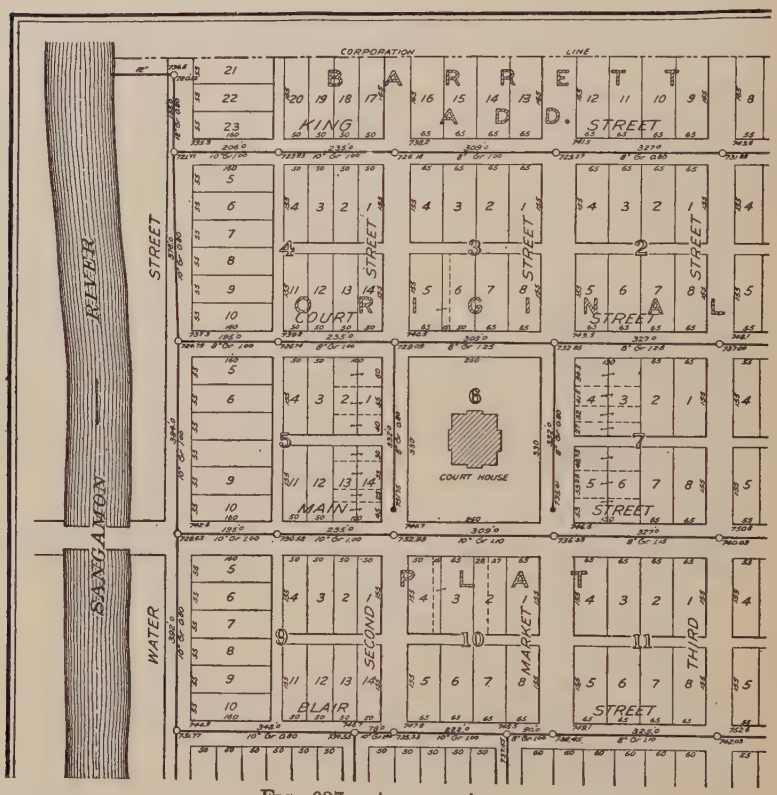

Fig. 637.—A sewer pipe.

A few of the more important public buildings are shown, to facilitate reading. The various wards, subdivisions or districts may be shown by large outline letters or numerals as illustrated in the figure. Contours are often put on these maps in red or brown ink, either on the original or sometimes on a white line print from it.

296. Topographical Drawing.—As before defined, a complete topographical map would contain:

1. The imaginary lines indicating the divisions of authority or ownership.

2. The geographical position of both the natural features and the works of man. They may also include information in regard to the vegetation.

3. The relief, or indication of the relative elevations and depressions. The relief, which is the third dimension, is represented in general either by contours or by hill shading.

297. Contours.—A contour is a line on the surface of the ground which at every point passes through the same elevation, thus the shore line of a body of water represents a contour. If the water should rise one foot the new shore line would be another contour, with one foot "contour interval." A series of contours may thus be illustrated approximately by Fig. 638.

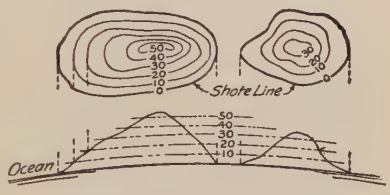

Fig. 638.—Contours.

Figure 639 is a perspective view of a tract of land. Figure 640 is a contour map of this area, and Fig. 641 is the same surface shown with hill shading by hachures. Contours are drawn as fine,

Fig. 639.—Perspective view.

full lines, with every fifth one of heavier weight, and the elevations in feet marked on them at intervals, usually with the sea level as datum. They may be drawn with a swivel pen, Fig. 709, Alteneder's is recommended, or with a fine pen such as Gillott's 303 or 170. On paper drawings they are usually made in brown.

Figure 642 is a topographic map of the site of a proposed filtration plant, and illustrates the use of the contour map as the

necessary preliminary drawing in engineering projects. Often on the same drawing there is shown, by lines of different character, both the existing contours and the required finished grades.

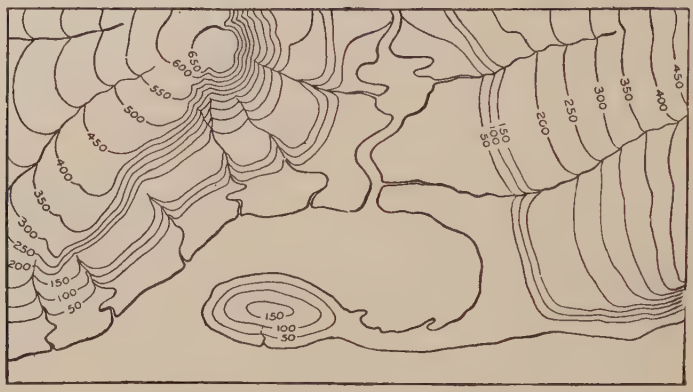

Fig. 640.—Application of contour lines.

298. Hill Shading.—The showing of relief by means of hill shading gives a pleasing effect but is very difficult of execution, does not give exact elevations, and would not be applied on maps to be used for engineering purposes. It may sometimes be used

Fig. 641.—Application of hachures for hill shading.

to advantage in reconnaissance maps, or in small-scale maps for illustration. There are several systems, of which hachuring, as shown in Fig. 641, is the commonest. The contours are sketched lightly in pencil and the hachures drawn perpendicular to them, starting at the summit and grading the weight of line

to the degree of slope. A scale of hachures to use for reference is often made, graded from black for 45° to white for horizontal. The rows of strokes should touch the pencil line to avoid white streaks along the contours. Two other systems in use are the horizontal, or English, drawing graded lines parallel to the contours, and the oblique illumination, or French, using hachures graded to give sunlight effect as well as the degree of slope.

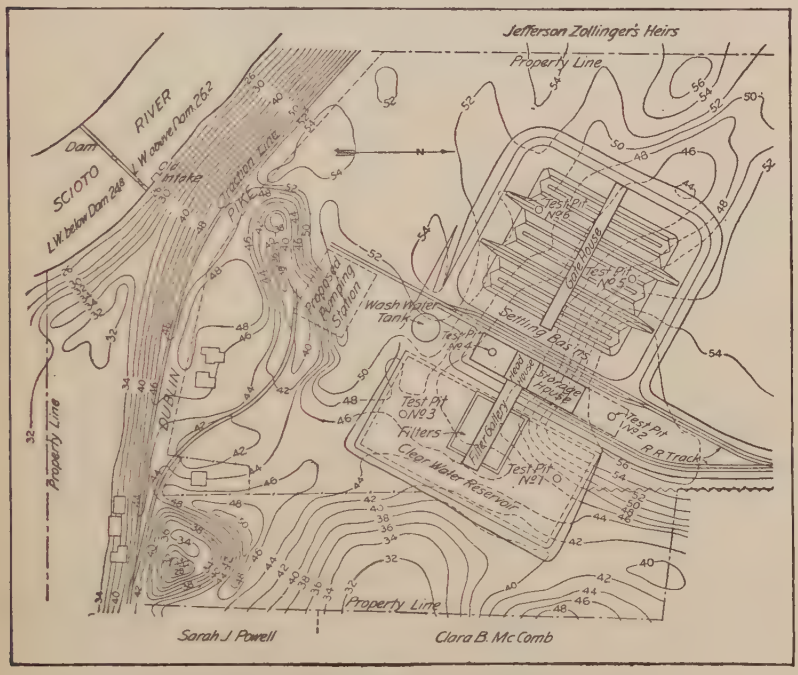

Fig. 642.—Contour map for engineering project.

299. Water-lining.—On topographic maps made for display or reproduction the water features are usually finished by "water-lining," running a system of fine lines parallel to the shore lines, either in black or in blue (it must be remembered that blue will not photograph for reproduction nor print well from a tracing). Poor water-lining will ruin the appearance of an otherwise well-executed map, and it is better to omit it rather than do it hastily or carelessly. The shore line is drawn first, and the water-lining done with a fine mapping pen, as Gillott's 170 or 290, always drawing toward the body and having the preceding line to the left. The first line should follow the shore line very closely, and

the distances between the succeeding lines gradually increased and the irregularities lessened. Sometimes the weight of lines is graded as well as the intervals but this is a very difficult opera-

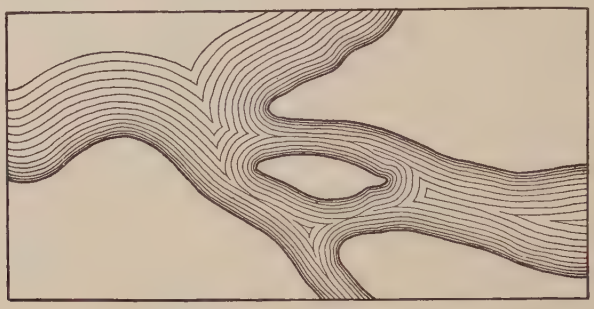

FIG. 643.—Water lining.

tion and is not necessary for the effect. A common mistake is to make the lines excessively wavy or rippled.

In water-lining a stream of varying width, the lines are not to be crowded so as to be carried through the narrower portions, but corresponding lines should be brought together in the middle of

FIG. 644.—Culture.

the stream as illustrated in Fig. 643. Care should be taken to avoid any spots of sudden increase or decrease in spacing.

300. Topographic Symbols.—The various symbols used in topographic drawing may be grouped under four heads:

1. Culture, or the works of man.

2. Relief—relative elevations and depressions.
3. Water features.
4. Vegetation.

When color is used the culture is done in black, the relief in brown, the water features in blue, and the vegetation in black or green.

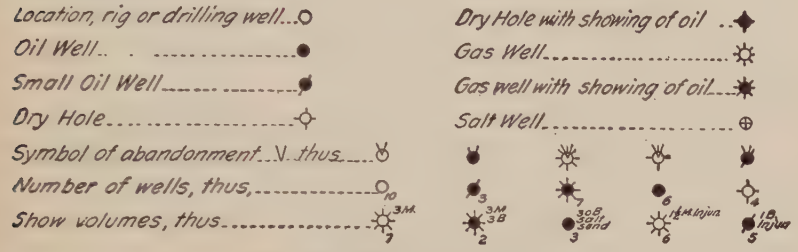

Fig. 645.—Oil and gas symbols.

These symbols, used to represent characteristics on the earth's surface, are made, when possible, to resemble somewhat the features or object represented as it would appear either in plan or elevation. No attempts is here made to give symbols for all the features that might occur in a map, indeed one may have to invent symbols for some particular locality.

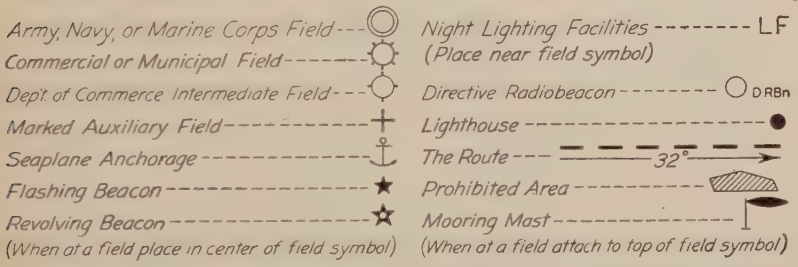
Army, Navy, or Marine Corps Field
Commercial or Municipal Field
Dept. of Commerce Intermediate Field
Marked Auxiliary Field
Seaplane Anchorage
Flashing Beacon
Revolving Beacon
(When at a field place in center of field symbol)
Night Lighting Facilities LF
(Place near field symbol)
Directive Radiobeacon DRBn
Lighthouse
The Route 32°
Prohibited Area
Mooring Mast
(When at a field attach to top of field symbol)
All the above symbols to be drawn in red

Fig. 646.—Aviation symbols.

Figure 644 illustrates a few of the conventional symbols used for culture or the works of man, and no suggestion is needed as to the method of their execution. When the scale used is large, houses, bridges, roads, and even tree trunks can be plotted so that their principal dimensions can be scaled. A small-scale map can give by its symbols only the relative locations.

In Fig. 645 the standard symbols used in the development of oil and gas fields are given; in Fig. 646 the symbols for aerial navi-

gation of the U. S. Board of Surveys and Maps, adopted October, 1928; in Fig. 647 symbols used to show relief; in Fig. 648 water features and in Fig. 649 some of the commoner symbols for vegetation and cultivation.

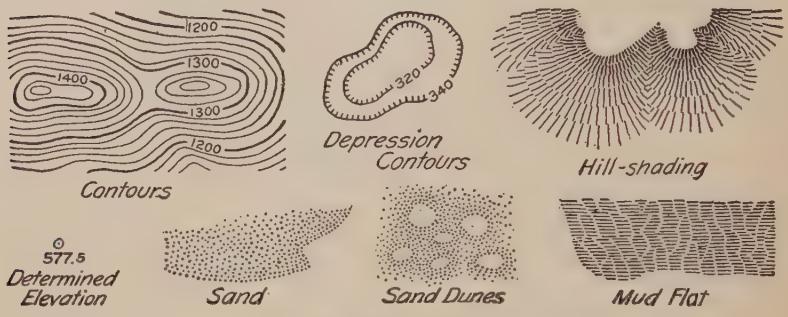

Fig. 647.—Relief.

Draftsmen should keep in mind the purpose of the map, and the relative importance of features should be in some measure indicated by their prominence or strength, gained principally by the amount of ink used. For instance, in a map made for

Fig. 648.—Water features.

military maneuvering a cornfield might be an important feature; or in maps made to show the location of special features, such as fire hydrants, these objects would be indicated very plainly. This principle calls for some originality to meet varying cases.

A common fault of the beginner is to make symbols too large. The symbols for grass, shown under "meadow," Fig. 649, if not made and spaced correctly will spoil the entire map. This symbol is composed of from five to seven short strokes radiating from a common center and starting along a horizontal line as shown in the enlarged form, each tuft beginning and ending with a mere dot. Always place the tufts with the bottom parallel to the border and distribute them uniformly over the space, but not in rows. A few incomplete tufts, or rows of dots improve the appearance. Grass tufts should never be as heavy as tree symbols. In drawing the symbol for deciduous trees the sequence of strokes shown should be followed.

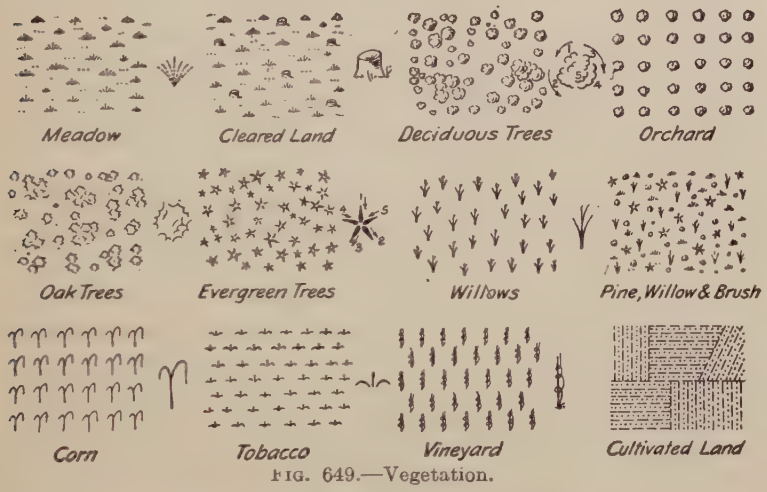

FIG. 649.—Vegetation.

The topographic map, Fig. 650, is given to illustrate the general execution and placing of symbols.

The well-known maps of the Coast Survey and Geological Survey illustrate the application of topographical drawing. The quadrangle sheets issued by the topographical branch of the U. S. Geological Survey are excellent examples and so easily available that every draftsman should be familiar with them. These sheets represent 15 minutes of latitude and 15 minutes of longitude to the scale of 1:62500 or approximately 1 inch to the mile. The entire United States is being mapped by the Department in cooperation with the different states, and in 1929 over 43 per cent has been completed, the amounts varying widely in different states, as 77 per cent of Pennsylvania, 10.1 per cent of

Indiana, all of Ohio and 8 other states. This work is now facilitated by the application of airplane photography. Much territory in the West and South has been mapped $\frac{1}{2}$ inch to the mile, and earlier some in the West was mapped $\frac{1}{4}$ inch to the mile. These maps may be secured for 10 cents each (not stamps) by addressing *The Director, U. S. Geological Survey, Washington, D. C.* from whom information as to the completion of any particular locality or the progress in any state may be had.

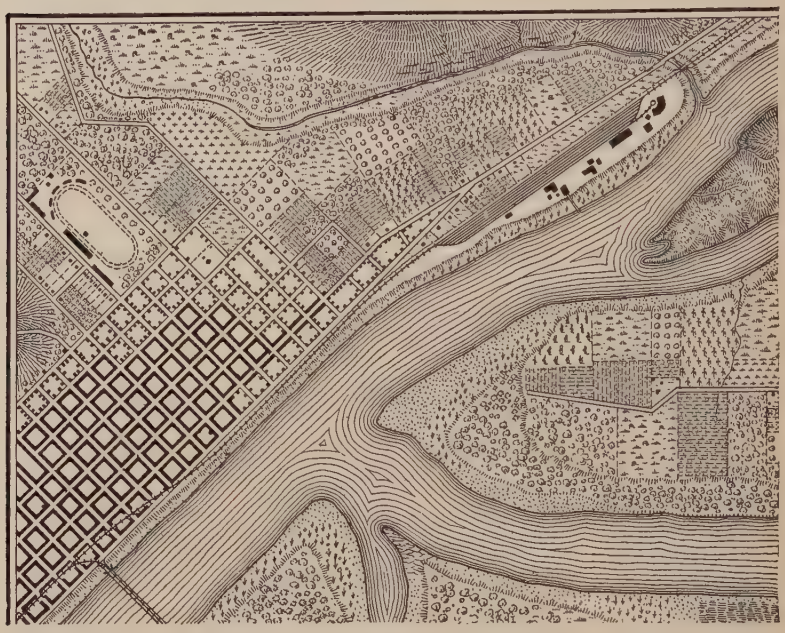

FIG. 650.—Part of a topographic map.

301. Landscape Maps.—A topographic map made to a relatively large scale and showing all details is called a "landscape map." Such maps are required by architects and landscape gardeners for use in planning buildings to fit the natural topographic features and for landscaping parks, playgrounds and private estates. These are generally maps of small areas, and a scale of $1'' = 20'$ to $1'' = 50'$, depending upon the amount of detail, is used.

The contour interval varies from 6 inches to 2 feet according to the ruggedness of the surface. The commonest interval is 1 foot. These maps are often reproduced in black line prints upon

which contours in different color are drawn to show the landscape treatment proposed. Natural features and culture are added in more detail than on ordinary topographic maps. Trees are designated as to size, species, and sometimes spread of branches and condition. It is often necessary to invent symbols suitable for the particular survey and to include a key or legend on the map. Roads, walks, streams, flower beds, houses, etc., should be plotted carefully to scale, so that measurements can be taken from them.

302. Colors.—Instead of using colored inks, which are thin and unsatisfactory to handle in the pen, and neither photograph nor blueprint well, it is much better to use water colors for contours, streams and other colored symbols in topographic mapping. For contours, burnt sienna, either straight or darkened with a drop of black, and mixed rather thick; for streams Prussian blue, and for red features alizarin crimson, all work well in either crowquill or contour pen and make good blue prints. Colors in tubes are more convenient than those in cakes or pans.

303. Lettering.—The style of lettering on a topographic map will of course depend upon the purpose for which the map is made. If for construction purposes, such as a contour map for the study of municipal problems, street grades, plants, or railroads, the single-stroke Gothic and Reinhardt is to be preferred. For a finished map vertical modern Roman letters for land features, and inclined Roman and stump letters for water features should be used. The scale should always be drawn as well as stated.

304. Titles.—The standard letter for finished map titles is the Modern Roman. The design should be symmetrical, as in Fig. 98, with the heights of the letters proportioned to the relative importance of the line. A map title should contain as many as are necessary of the following items:

1. Kind.—"Map of," etc.
2. Name.
3. Location of tract.
4. Purpose, if special features are represented.
5. For whom made.
6. Engineer in charge.
7. Date (of survey).
8. Scale—stated and drawn.
9. Authorities.
10. Legend or key to symbols.
11. North point.
12. Certification.

305. Profiles.—Perhaps no kind of drawing is used more by civil engineers than the ordinary profile, which is simply a vertical section taken along a given line either straight or curved. Such drawings are indispensable in problems of railroad construction,

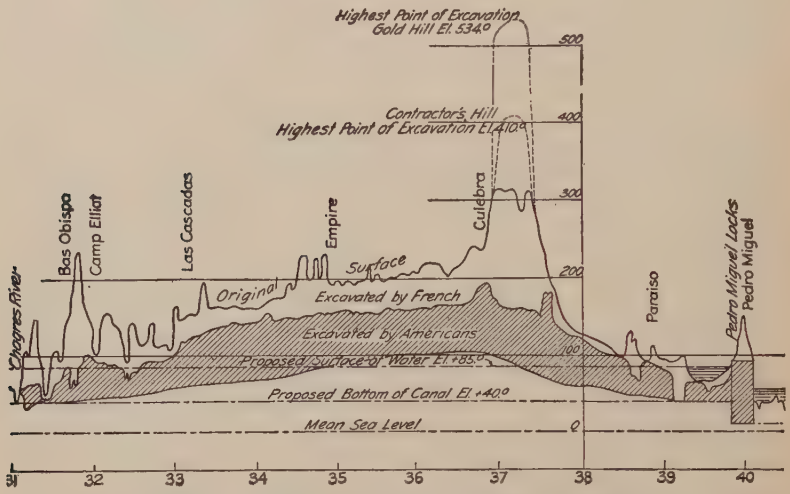

Fig. 651.—Profile (vertical scale 50 times horizontal).

highway and street improvements, sewer construction, and many other problems where a study of the surface of the ground is required. Very frequently engineers other than civil engineers are called upon to make these drawings. Several different types

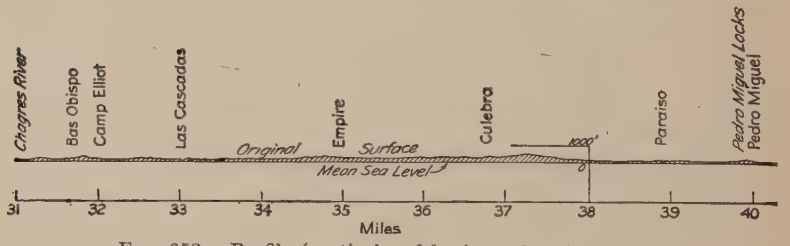

Fig. 652.—Profile (vertical and horizontal scales equal).

of profile and cross-section paper are in use and may be found in the catalogues of the various firms dealing in drawing materials. One type of profile paper in common use is known as "Plate A" in which there are four divisions in the inch horizontally and twenty to the inch vertically. Other divisions which are used

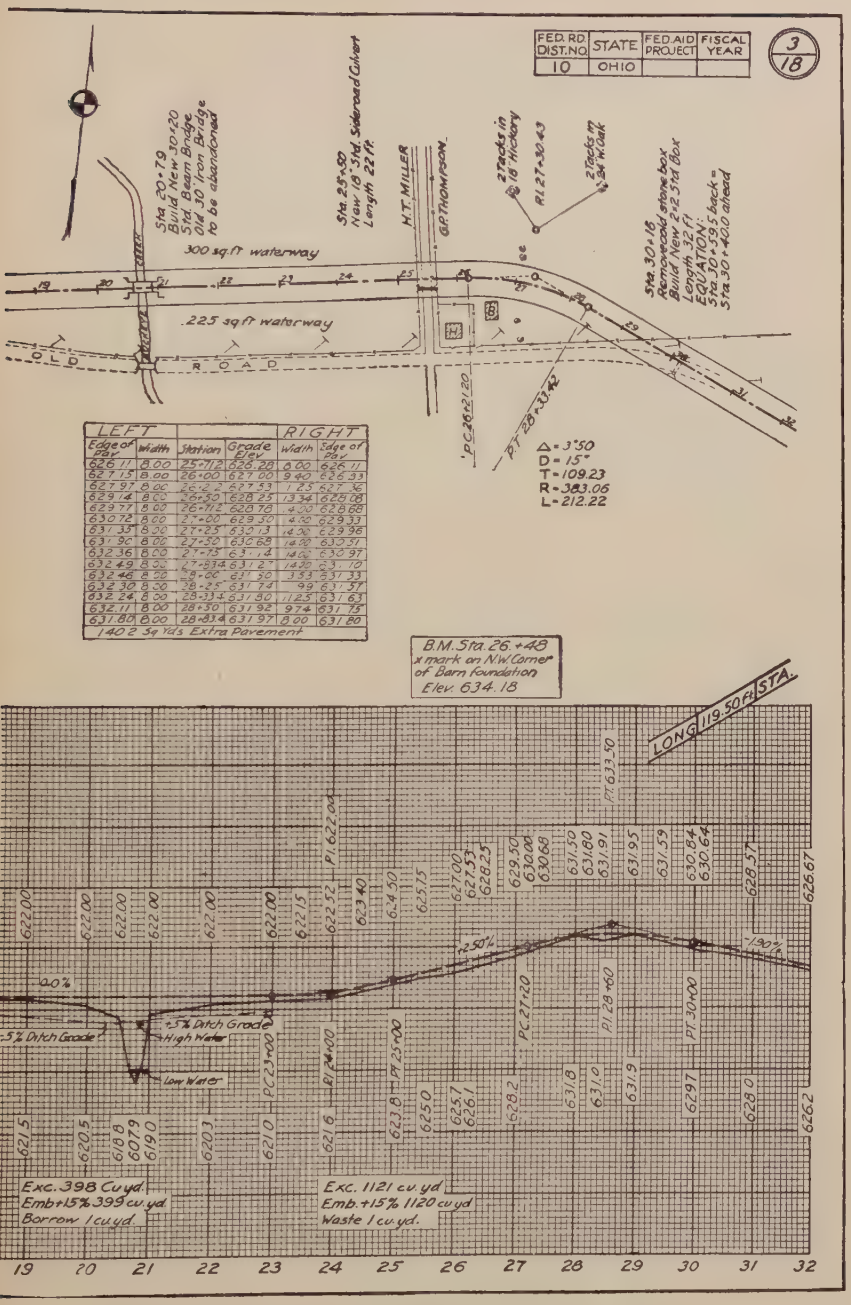

FIG. 653.—Part of a state highway alignment and profile sheet.

are 4×30 to the inch and 5×25 to the inch. At intervals, both horizontally and vertically, somewhat heavier lines are made in order to facilitate reading.

Horizontal distances are plotted as abscissas and elevations as ordinates. The vertical distances representing elevations, being plotted to larger scale, a vertical exaggeration is obtained which is very useful in studying the profile for the establishing of grades. The vertical exaggeration is sometimes confusing to the layman or inexperienced engineer, but ordinarily a profile will fail in the purpose for which it was intended if the horizontal and vertical scale are the same. Again the profile unless so distorted would be a very long and unwieldy affair, if not entirely impossible to make. The difference between profiles with and without vertical exaggeration is shown in Figs. 651 and 652.

Figure 653 is a portion of a typical State Highway *Alignment and Profile sheet*, plotted to scale $1'' = 100'$ with vertical scale of profile $1'' = 10'$. Tracing cloth is furnished with the coordinates printed in red on the back so that any changes or erasures on the profile do not affect the lines. The figures and notes on the profile are brought out by erasing the lines on the back. This sheet is one of a set of drawings used for estimating cost, and by the contractor as a working drawing during construction. Other drawings in the set consist of *cross-sections* (taken every 100 feet or oftener), used for grading, and *working drawings* of bridges, culverts, guard rails, etc., as well as standard paving and grading sections for the various conditions met with in the stretch of road under consideration.

CHAPTER XVIII

Charts, Graphs and Diagrams

306. All of our study thus far through this book has been in the use of the graphic language in the representation of objects—the method of description of machines or structures or projects. This chapter is added as an introduction to the use of graphical methods in tabulating data, solving problems and presenting facts. In the limits of a single chapter it is possible only to suggest the uses and value to the engineer of this application of graphics, and to urge his study of the present literature on the subject such as Karsten, Haskell or Brinton. The titles of these and other books recommended are given in the Bibliography in the last chapter.

For the purpose of presenting a series of quantitative facts quickly the graphical chart is the one best method. The statement "it is easier to see than to think" applies as meaning that with the majority of people the visual impression is the strongest form of appeal. It is not to be supposed that graphical charts can be substituted for thinking, but they assist clear thinking by eliminating the tiring mental effort necessary in keeping in mind an involved series of figures. When properly constructed and thoroughly understood, charts, graphs and diagrams constitute a powerful tool for the analysis of engineering data, computation, and the presentation of statistics for comparison or prediction.

307. When classified as to use, charts, graphs and diagrams may be divided roughly into two classes; those used for purely technical purposes, and those for popular appeal in information or advertising. The engineer is concerned mainly with the first class, but he should have some acquaintance with the preparation and possibilities in influence of the second class. The aim here is to give a short study of the types with which engineers and those in allied professions should be familiar.

The construction of a graphical chart requires a fair degree of draftsmanship, but in engineering and scientific work the important considerations are judgment as to the proper selection

of coordinates, accuracy in plotting points and drawing the graph, and an understanding of the functions and limitations of the resulting chart.

It is assumed that the reader is familiar with the use of rectangular coordinates and that the meaning of such terms as "axes," "ordinates," "abscissas," "coordinates," "variables" etc., is understood.

308. Rectilinear Charts.—The rectilinear chart consists of a plane surface ruled off into squares. The spacing between lines is purely arbitrary, but it is customary and most convenient to use a sheet divided into squares $\frac{1}{10}$ inch on a side with every fifth line heavier, to aid in plotting and reading. Graph sheets are made with various other rulings, as 4, 6, 8, 12, and 16 divisions per inch.

As the majority of chart work in experimental engineering is done on rectilinear graph paper the student should become familiar with this form of chart early in his course.

It is the universal custom to use the upper right-hand quadrant for plotting experimental curves, making the lower left-hand corner the origin. In case both positive and negative values of a function are to be plotted, as in the case of many mathematical curves, it is necessary to place the origin so as to include all desired values.

Figure 654 shows a usual form for the presentation of an engineering graph, when it is to be included in a written or typewritten report. The paper used is $8\frac{1}{2} \times 11$ ruled in inches and twentieths. In the reproduction only the $\frac{1}{4}$-inch divisions are shown.

In drawing graphs from experimental data it is often a question as to whether the curve should pass through all the points plotted or strike a mean between them. In general, the correct procedure is to locate the points by small circles and to draw the curve as a smooth curve striking the mean, since the deviations are probably due to observational errors.

309. Titles and Notation.—The title is an important part of a graphic chart. Its wording should be studied until it is both clear and concise. In every case it should contain sufficient description to tell what the chart is, the source or authority, the name of the observer and the date. It should be placed on the sheet in a convenient open space where it can be read easily. A border line or box drawn about the title sets it out from the sheet. For the best effect the lines of the box should not fall on the

heavy coordinate lines. Each sheet of curves should have a title and when more than one curve is shown on a sheet, the different curves should be drawn so as to be easily distinguishable. One of the commonest ways is to vary the character of the lines, using full, dotted and dot-and-dash lines. If this is done a "key" should be included on the sheet. Another method when not

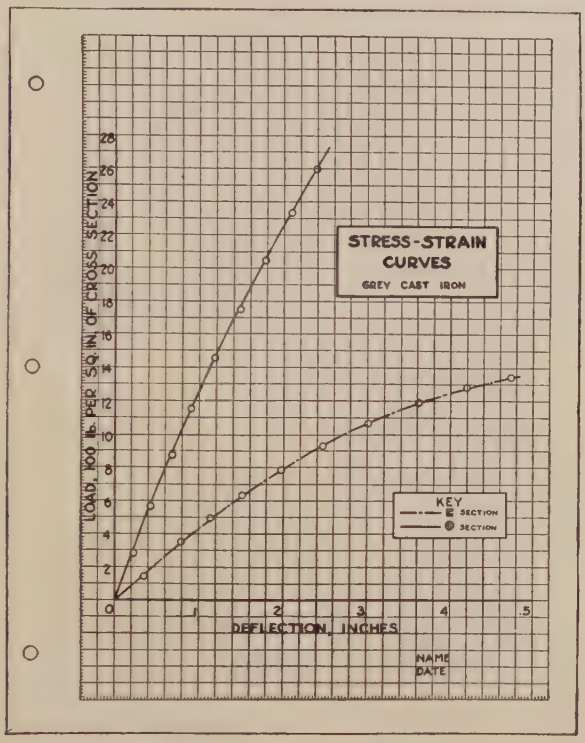

FIG. 654.—An engineering diagram.

intended for reproduction is to use different colors of inks. It is sometimes effective to letter the names of the curves directly along them.

310. Logarithmic Charts.—The logarithmic chart is constructed by ruling two sets of parallel lines at right angles to each other, the spaces between lines being proportional to the logarithms of the numbers at the margin instead of the numbers themselves. The principles underlying the logarithmic chart will be much better understood if the student constructs a simple one, with a table of logarithms at hand. The logarithm of 0 is 1, hence

the origin of the chart is marked with the figure 1. The next division being 2, look up the logarithm of 2 and measure off a corresponding distance from the origin, marking the point 2. Proceed with 3, 4 etc., laying off as much of the chart as is desired. In case a book of logarithms is not at hand the divisions may be obtained directly from the graduations of the "C" scale of a slide rule, or any of the other scales graduated logarithmically.

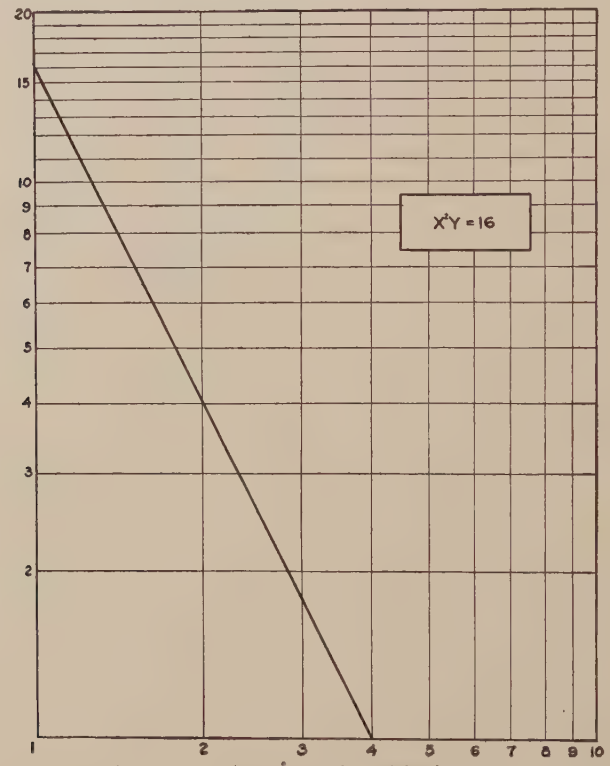

Fig. 655.—A curve on logarithmic paper.

The property which distinguishes the logarithmic chart and accounts for its usefulness in so many cases is that the graphs of all algebraic equations representing multiplication, division, roots and powers are straight lines.

Figure 655 is an example of the logarithmic chart and shows the effect of plotting the equation $x^2y = 16$ on logarithmic coordinates. If this equation were plotted on ordinary rectangular coordinates the resulting curve would be a hyperbola with the X and Y axes as asymptotes. Taking the logarithms of both

sides of the given equation it becomes $2 \log x + \log y = \log 16$. The equation now has the slope intercept form $y = mx + b$, and if so desired could be plotted on rectangular coordinates by substituting the logarithms of the variables. Obviously, it is easier to use logarithmic coordinates and plot the points directly than to take the logarithms of the variables and plot them on rectangular coordinates.

A feature of the logarithmic chart which makes it valuable for the study of certain problems is that the exponent in the equation may be determined by measuring the slope of the graph. An inspection of the above equations will show that the slope m as given by the slope intercept form, is -2. The value of this exponent may be determined by direct measurement of the slope, using a uniformly graduated scale.

In using log paper interpolations should be made logarithmically, not arithmetically as in the case of rectangular coordinates. With finely graduated paper little error will be introduced by arithmetical interpolation, but with coarse divisions the error may be considerable. Log paper in various rulings may be purchased, ruled in one, two, three or more "decks" or multiples of 10, also in "part deck" and "split deck" form.

311. The Semi-logarithmic Chart.—This chart is a composite of the rectilinear and logarithmic charts. The rulings in one direction are equally spaced while those at right angles are logarithmically spaced.

This form of chart is frequently called the "ratio chart," owing to a property by virtue of which the slope of the curve at any point is an exact measure of the rate of increase or decrease in the data plotted. It is extremely useful in statistical work as it shows at a glance the rate at which a variable changes. Karsten aptly calls it the "Rate of Change Chart" as distinguished from the rectilinear or "Amount of Change Chart." By the use of this chart statisticians are able to predict the trend of different lines of business, growth of population, etc.

In choosing between the rectilinear chart and the semi-log chart the important point to consider is whether the chart is to represent *numerical* increases and decreases or *percentage* increases and decreases. In many cases it is desired to emphasize the percentage or rate change, not the numerical change, in which case the semi-log chart should be used.

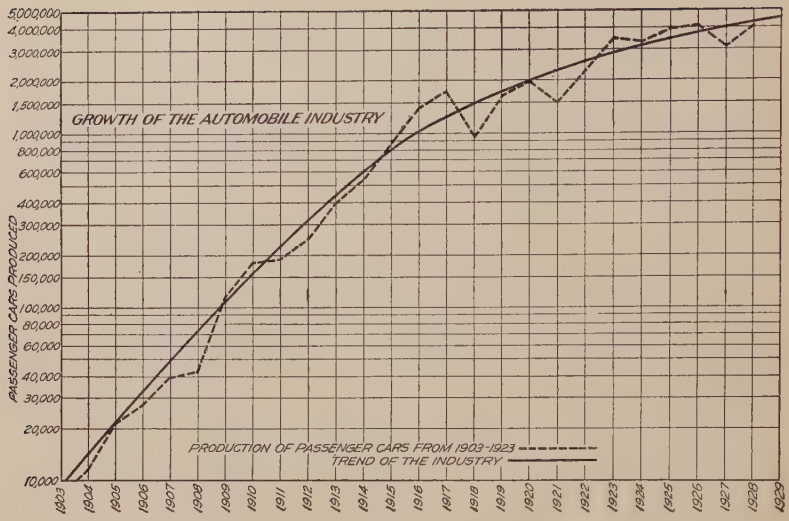
GROWTH OF THE AUTOMOBILE INDUSTRY
PASSENGER CARS PRODUCED
PRODUCTION OF PASSENGER CARS FROM 1903-1923
TREND OF THE INDUSTRY

Fig. 656.—A curve on semi-logarithmic paper.

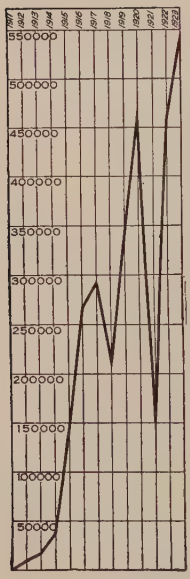

Fig. 657.—A misleading chart.

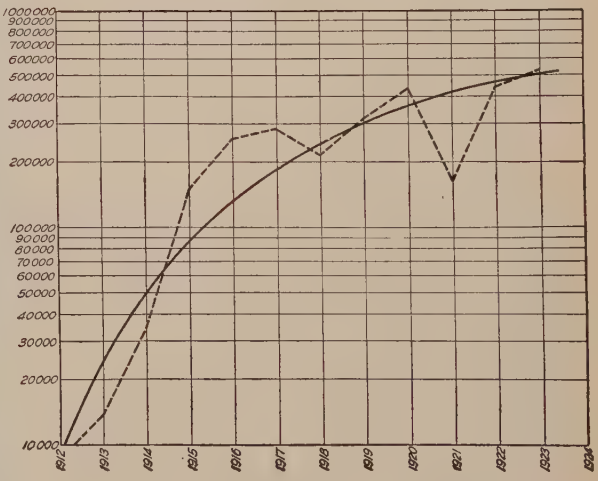

Fig. 658.—A true interpretation of the same data.

An example of the use of the semi-log chart is illustrated in Fig. 656. This curve was drawn from data furnished by R. B. Prescott, Consulting Statistician, compiled for "Automotive Industries." The dash line is the actual production by years, and the black line the trend curve, whose extension predicts future production.

312. The function of a chart is to reveal facts. It may be made entirely misleading if a wrong choice of paper or coordinates is taken. The growth of an operation plotted on a rectilinear chart might, for example, entirely mislead an owner analyzing the trend of his business.

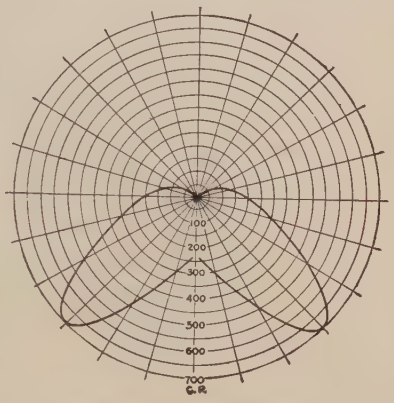

FIG. 659.—A polar chart.

Figure 657 is the reproduction of a chart which appeared in a well-known magazine, advertising a certain automotive product. The impression given to the reader is that of wonderfully rapid growth. The same data plotted on semi-log paper with a trend curve added is shown in Fig. 658. This curve compared with that of Fig. 656 shows that the business of this company has only followed the growth of the industry, the business increasing but the rate of increase decreasing. Another misleading danger is illustrated in Fig. 657 in which the vertical scale has been greatly exaggerated for the sake of greater effect.

313. The Polar Chart.—The use of polar coordinate paper for the purpose of representing the intensity of illumination, intensity of heat, polar forms of curves, etc., is common. Figure 659 is the light-distribution chart of a direct-current arc lamp. The intensity of light at any given point may be determined directly by reading off the distance from the origin to the point in question.

An interesting example of the use of a polar chart is given in Fig. 660. The entire arrangement of the chart is very practical and condenses a remarkable amount of data into a few lines. The drawing of the top part of the head is indispensable in this case, and is drawn to a scale such that it will not interfere with the rest of the chart.

The above examples are merely suggestive of a great variety of uses for polar charts. It has been found possible to use them in certain kinds of plotting in civil engineering, with a great gain in speed and accuracy over former methods.

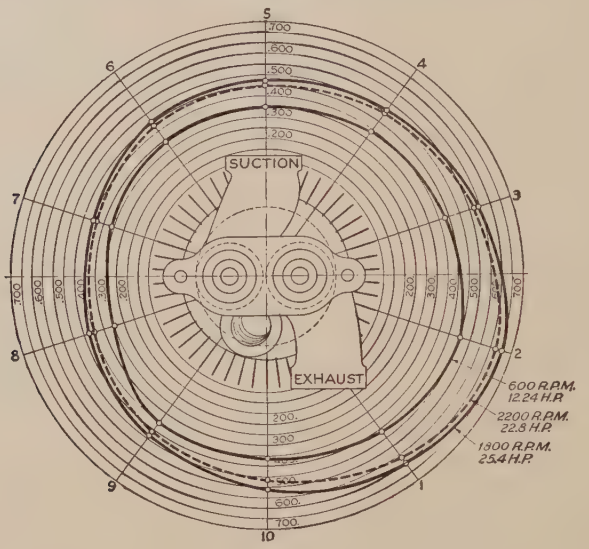

Fig. 660.—A polar chart.

314. The Trilinear Chart.—The trilinear chart, or triaxial diagram, as it is sometimes called, offers a valuable means of studying the properties of chemical compounds consisting of three elements, alloys of three metals, and the properties of a great many compounds and mixtures containing three variables.

This chart has the form of an equilateral triangle the altitude of which represents 100 per cent of any one of the three constituents. Figure 661 showing the tensile strength of copper-tin-zinc alloys, is a typical example of its application. The use of such diagrams depends upon the geometrical principle that the sum of the perpendiculars to the sides from any point within an equilateral triangle is a constant and is equal to the altitude.

315. The Alignment Chart.—In its simplest form the alignment chart or "nomograph" consists of three parallel lines graduated and spaced in such a manner that a straight line passing through known values on two of the scales gives the proper corresponding value at its intersection with the third scale. After an alignment chart is constructed, it is one of the easiest and most

accurate means for the rapid solution of the equation for which it is designed. It is beyond our scope here to explain the mathematics underlying the construction of alignment charts, as this chapter is only indicating and illustrating the various uses of

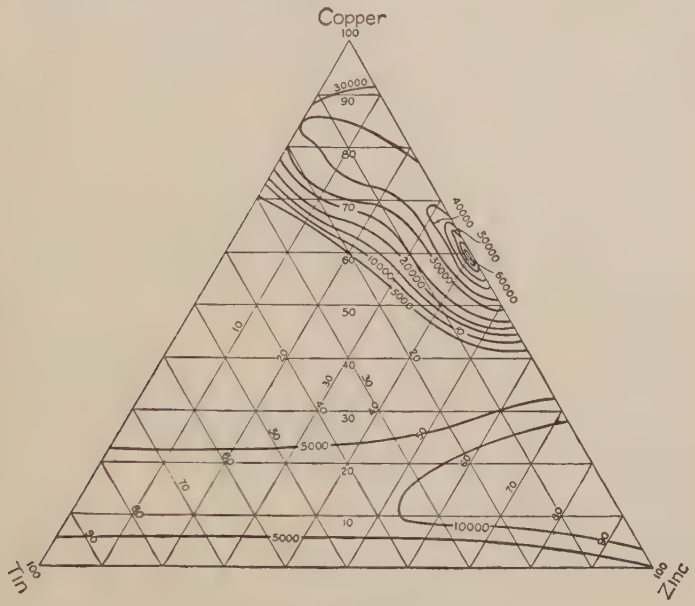

FIG. 661.—A trilinear chart.

graphic representation. The graduated lines in a nomograph need not be parallel, and any or all of them may be either curved or straight, depending upon the equation represented. Figure 662 is one form of an alignment chart, sometimes called the "zig-zag nomograph" from its appearance. The rectangular chart for the same equation is given in Fig. 663 for comparison. The simplicity of the alignment chart is obvious.

316. Classification Charts, Route Charts and Flow Sheets.—The uses to which the three named classes of charts may be put are widely different but their underlying principles are similar and they have thus been grouped for convenience.

A classification chart, as illustrated in Fig. 664, is intended to show the subdivisions of a whole, and inter-relation of these parts with each other. Such a chart often takes the place of a written outline since it gives a better visualization of the facts than words alone would convey. A common application is an organization

chart of a corporation or business. It is customary to enclose the names of the divisions in rectangles although circles or other shapes may be used. The rectangle has the advantage of being more convenient for lettering, while the circle may be drawn more quickly and possesses a popular appeal. Often a combination of both is used.

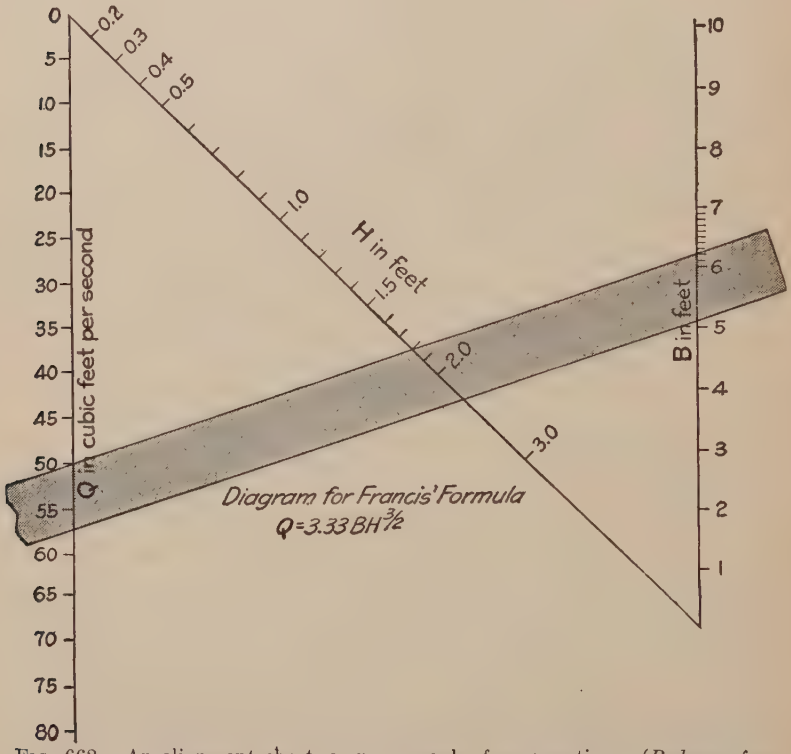

FIG. 662.—An alignment chart, or nomograph of an equation. (*Redrawn from Hewes and Seward, The Design of Diagrams for Engineering Formulas.*)

The *route chart* is used mainly for the purpose of showing the various steps in a process, either in manufacturing or in business transaction. The so-called *flow sheet* given in Fig. 665 is an example of a route chart applied to a chemical process. Charts of this type show in a dynamic way facts which might require some study to comprehend from written description. A different form of route chart is that of Fig. 494 showing the path of a drawing through the shops.

317. Popular Charts.—Engineers and draftsmen are frequently called upon to prepare charts and diagrams which will

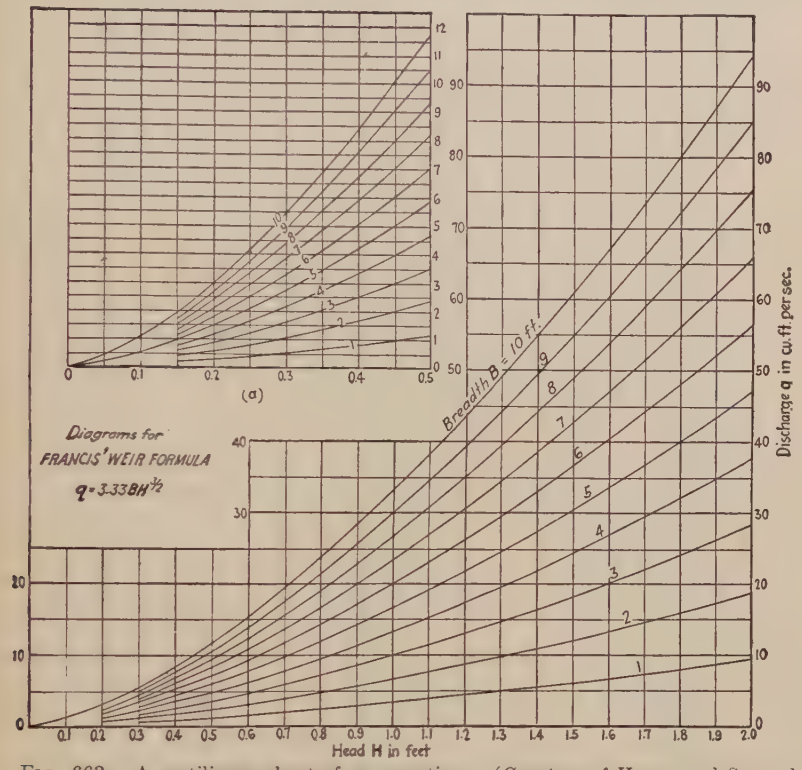

FIG. 663.—A rectilinear chart of an equation. (*Courtesy of Hewes and Seward The Design of Diagrams for Engineering Formulas.*)

be understood by diversified and non-technical readers. In many cases it is not advisable to present the facts by means of

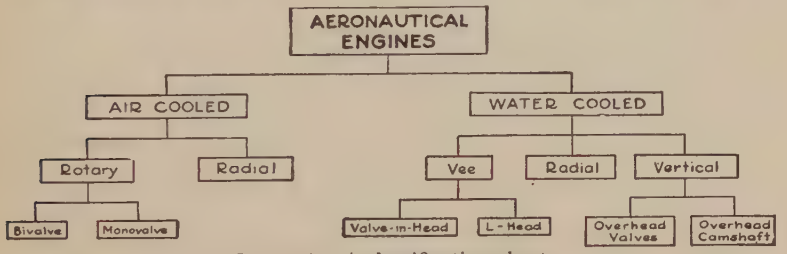

FIG. 664.—A classification chart.

curves drawn on coordinate paper, although the resulting chart may suffer somewhat in accuracy for the sake of greater effective-

ness. In preparing charts for popular use particular care must be taken to make them so that the impression produced will be both quick and accurate. It is to be remembered that such charts are seldom studied critically but are taken in at a glance, hence the method of presentation requires the exercise of careful judgment and the application of a certain amount of psychology.

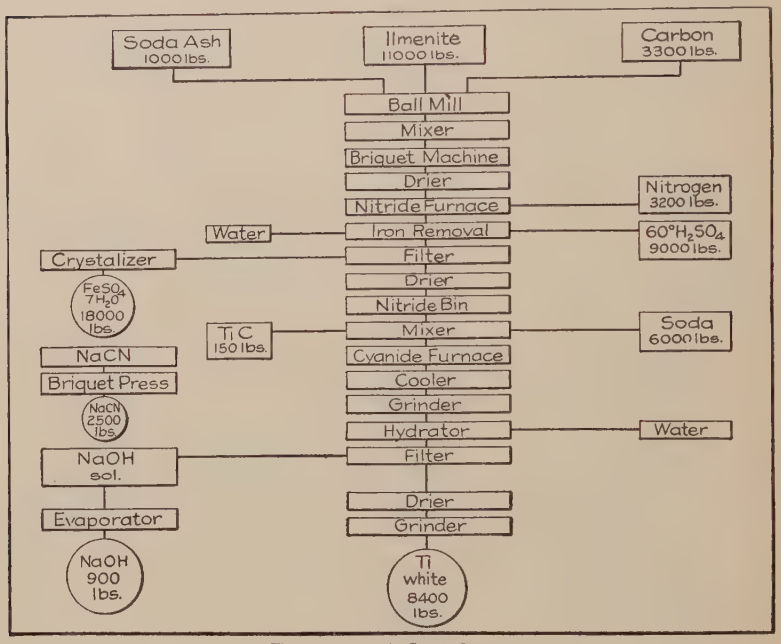

FIG. 665.—A flow sheet.

318. Bar Charts.—The bar chart is a very easily understood type for the non-technical reader. One of its simplest forms is the "*hundred per cent bar*," for showing the relations of the constituents to a given total. Figure 666 is an example of this form of chart. The different segments should be cross-hatched, shaded or distinguished in some effective manner, the percentage represented placed on the diagram or directly opposite and the meaning of each segment clearly stated. These bars may be placed either vertically or horizontally, the vertical position giving an advantage for lettering.

Figure 667 is an example of a *simple bar chart* in which the length of each bar is proportional to the magnitude of the quantity represented. Means should be provided for reading numerical

values represented by the bars. If necessary to give the exact value represented by the individual bars, these values should not be lettered at the ends of the bars since the apparent length would be increased. This type is made both horizontally with the description at the base, and vertically. The vertical form is sometimes called the "pipe-organ chart." When vertical bars are drawn close together so as to touch along the sides the diagram is called a "staircase chart." This is made oftener as the "staircase curve," a line plotted on coordinate paper representing the profile of the tops of the bars.

POWER LOSSES IN THE AVERAGE AUTOMOBILE WHEN RUNNING 20 MI. PER HR.

FIG. 666.—A 100 per cent bar.

A compound bar chart is made when it is desired to show two or more components in each bar. It is really a set of 100 per cent bars of different lengths set together either in pipe-organ or horizontal form.

319. Pie Diagrams.—The "pie diagram" or 100 per cent circle, Fig. 668, is much inferior to the bar chart but is used constantly because of its insistent popular appeal. It is a simple form of chart, and with the exception of the lettering, is easily constructed. It may be regarded as a 100 per cent bar bent into circular form. The circumference of the circle is divided into 100 parts and sectors are used to represent percentages of the

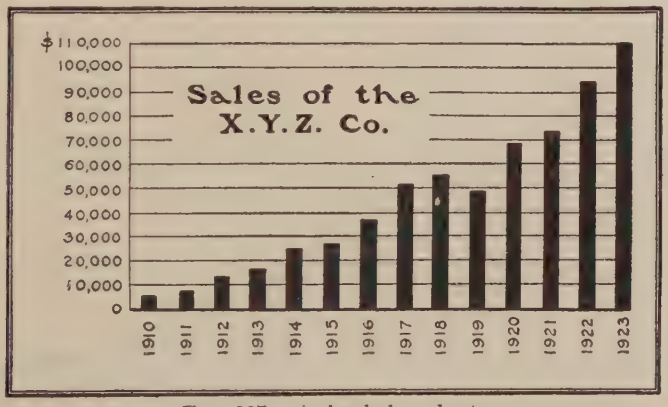

FIG. 667.—A simple bar chart.

total. To be effective, this diagram must be carefully lettered and the percentages marked on the sectors or at the circumference opposite the sectors. For contrast it is best to cross-hatch or shade the individual sectors. If the original drawing is to be

displayed, the sectors may be colored and the diagram supplied with a key showing the meaning of each color. In every case the percentage notation should be placed where it can be read without removing the eyes from the diagram.

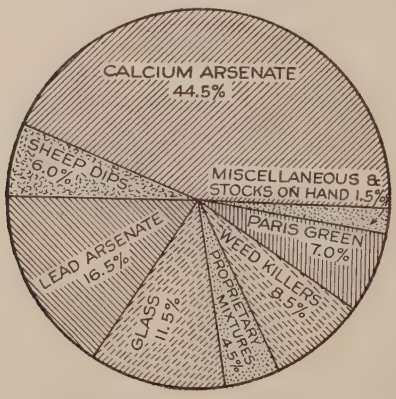

Fig. 668.—A pie diagram.

320. Area and Volume Diagrams.—The use of area and volume diagrams has been very common, although they are usually the most deceptive method of graphic representation. Pictorial

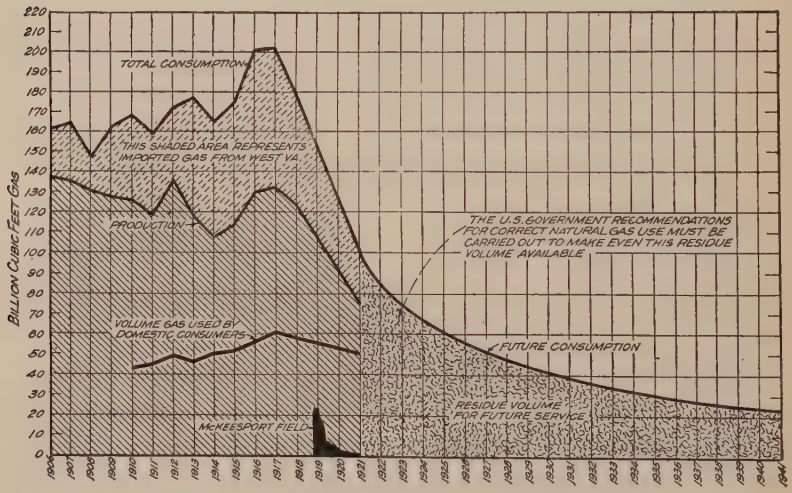
BILLION CUBIC FEET GAS
TOTAL CONSUMPTION
THIS SHADED AREA REPRESENTS IMPORTED GAS FROM WEST VA.
PRODUCTION
VOLUME GAS USED BY DOMESTIC CONSUMERS
McKEESPORT FIELD
THE U.S. GOVERNMENT RECOMMENDATIONS FOR CORRECT NATURAL GAS USE MUST BE CARRIED OUT TO MAKE EVEN THIS RESIDUE VOLUME AVAILABLE
FUTURE CONSUMPTION
RESIDUE VOLUME FOR FUTURE SERVICE

Fig. 669.—An area diagram. (*From Samuel S. Wyer.*)

charts of this type were formerly much used for comparisons, such as of populations, standing armies, livestock and other products. It was customary to represent the data by human figures whose

heights were proportional to the numerical values, or by silhouettes of the animals or products concerned, whose heights or sometimes areas were proportional. Such charts are grossly misleading since volumes vary as the cubes of the linear dimensions. For such comparisons bar charts or even pie diagrams should be used.

There are occasions when area diagrams offer the most logical and effective method of presentation, as in Fig. 669. Such a chart may be regarded as a series of vertical 100 per cent bars placed side by side with the tops and segments "smoothed" into a curve.

321. To Draw a Chart.—In drawing a coordinate chart the general order would be: (1) compute and assemble all data; (2) determine size and kind of chart best adapted and whether printed or plain paper will be used; (3) determine the scales for abscissas and ordinates from the limits of the data, and to give the best effect to the resulting curve; (4) lay off the independent variable (often *time*) on the horizontal or X axis, and the dependent variable on the vertical or Y axis; (5) plot points from the data and pencil the curves; (6) ink the curve; (7) compose and letter title and coordinates.

When the chart is drawn on a printed form, to be blue printed, the curve may be drawn on the reverse side of the paper, enabling erasures to be made without injuring the ruled surface.

Green is becoming the standard color for printed forms. Blue will not print nor photograph and red is trying on the eyes.

If the curve is for purposes of computation it should be drawn with a fine accurate line. If for demonstration it should be fairly heavy, for contrast and effect.

The Joint Committee on Standards for Graphic Presentation recommends the following rules:

Standards for Graphic Presentations.—

1. The general arrangement of a diagram should proceed from left to right.
2. Where possible represent quantities by linear magnitude as areas or volumes are likely to be misinterpreted.
3. For a curve the vertical scale, whenever practicable, should be so selected that the zero line will appear in the diagram.
4. If the zero line of the vertical scale will not normally appear in the curve diagram, the zero line should be shown by the use of a horizontal break in the diagram.
5. The zero lines of the scales for a curve should be sharply distinguished from the other coordinate lines.

6. For curves having a scale representing percentages, it is usually desirable to emphasize in some distinctive way the 100 per cent line or other line used as a basis of comparison.

7. When the scale of a diagram refers to dates, and the period represented is not a complete unit, it is better not to emphasize the first and last ordinates, since such a diagram does not represent the beginning and end of time.

8. When the curves are drawn on logarithmic coordinates, the limiting lines of the diagram should each be at some power of 10 on the logarithmic scale.

9. It is advisable not to show any more coordinate lines than necessary to guide the eye in reading the diagram.

10. The curve lines of a diagram should be sharply distinguished from the ruling.

11. In curves representing a series of observations, it is advisable whenever possible, to indicate clearly on the diagram all the points representing the separate observations.

12. The horizontal scale for curves should usually read from left to right and the vertical scale from bottom to top.

13. Figures for the scale of a diagram should be placed at the left and at the bottom or along the respective axes.

14. It is often desirable to include in the diagram the numerical data or formula represented.

15. If numerical data are not included in the diagram, it is desirable to give the data in tabular form accompanying the diagram.

16. All lettering and all figures in a diagram should be placed so as to be easily read from the base as the bottom, or from the right-hand edge of the diagram as the bottom.

17. The title of a diagram should be made as clear and complete as possible. Subtitles or descriptions should be added if necessary to insure clearness.

322. Charts for Reproduction.—Charts for reproduction by zinc etching should be carefully penciled to about twice the size of the required cut. See "drawing for reproduction" on page 400. In inking, first ink circles around plotted points; second, ink the curves with strong lines. A border pen is useful for heavy lines, and a Payzant pen may be used to advantage particularly with dotted lines; third, ink the title box and all lettering; fourth, ink the coordinates with fine black lines, putting in only as many as are necessary for easy reading, and breaking them wherever they interfere with title or lettering, or cross-plotted points.

323. Charts for Display.—Large charts for demonstration purposes are sometimes required. These may be drawn on sheets 22×28 or 28×44 known as printer's blanks. The quickest way to make them is with show-card colors and single

stroke sign-writer's brushes. Large bar charts may be made with strips of black adhesive tape. Lettering may be done with the brush or with gummed letters.

PROBLEMS

324. The following problems are given as suggestive of various types for both technical and popular presentation.

1. During a certain chemical process the rise in temperature varied with the time as given in the following data:

Time	Temperature, Deg. Cent.	Time	Temperature, Deg. Cent.
0	0	7	136
1	33	8	139
2	66	9	142
3	93	10	143
4	110	11	144
5	123	12	155
6	131		

Using $8\frac{1}{2}'' \times 11''$ paper divided into inches and twentieths show graphically the relation between the time and the corresponding rise in temperature.

2. In a tension test of a machine-steel bar the following data were obtained:

Applied Load, Pounds per Square Inch	Elongation per Inch of Length
0	0
3,000	.00011
5,000	.00018
10,000	.00033
15,000	.00051
20,000	.00067
25,000	.00083
30,000	.00099
35,000	.00115
40,000	.00134
42,000	.00142

Plot the above data on rectangular coordinates using the elongation as the independent variable and the applied load as the dependent variable.

3. In testing a small 1-kw. transformer for efficiencies at various loads the following data were obtained:

Watts Delivered	Losses
948	73
728	62
458	53
252	49
000	47

Plot curves on rectangular coordinate paper showing the relation between percentage of load and efficiency, using watts delivered as the independent variable and remembering that efficiency = output ÷ (output + losses).

4. The following data were obtained from a test of a 4-cylinder automobile engine.

R.P.M.	Length of Run, Minutes	Fuel per Run, Pounds	Brake Horsepower
1006	11.08	1.0	5.5
1001	4.25	.5	8.5
997	7.53	1.0	13.0
1000	5.77	1.0	16.3
1002	2.38	.5	21.1

Plot curves on rectangular coordinate paper showing the relation between fuel used per brake horsepower hour and brake horsepower developed. Show also the relation between thermal efficiency and brake horsepower developed assuming the heat value of the gasoline at 19,000 B.t.u. per pound.

5. During a certain year the distribution of bleaching powder by industries was as follows:

Industry	Tons
Pulp and paper	64,000
Textile	16,000
Water purification	9,000
Laundry	4,000
Miscellaneous	7,000

Show these facts by means of a 100 per cent bar, a pie diagram, and a bar chart. After having drawn these three charts determine which one you would use if you were presenting the information to the president of a manufacturing company; to the general public; to a group of engineers.

6. Make a semi-logarithmic chart showing the comparative rate of growth of the five largest American cities during the past fifty years. Data for this chart may be obtained from U. S. Census Bureau Reports.

7. Make a compound bar chart showing the proportion of men and women students in your school in first, second, third and fourth years. Data from the registrar.

8. Make a compound bar chart comparison of the total foreign trade of the United States, Canada, France, Germany, Great Britain, Italy, Japan and the Netherlands, for one year, showing what proportion of the foreign countries' trade is with the United States. Data from World Almanac.

9. Make a rectilinear chart showing the fluctuation of one listed stock during the past month. The data for this may be obtained from the daily papers or from a stock broker.

10. Draw a chart showing the growth of life insurance in this country, in number of policies and in value, from 1900 to date. Data from World Almanac.

11. Put the data of Fig. 668 into 100 per cent bar form.

12. Make an organization chart of (*a*) your city government; (*b*) the administration of your school; (*c*) a small manufacturing concern.

CHAPTER XIX

Duplication and Drawing for Reproduction

325. As has been stated, working drawings or any drawings which are to be duplicated are usually traced. Sometimes drawings of a temporary character are, for economy, traced on white tracing paper, but tracing cloth is more transparent, much more durable, prints better, and is easier to work on.

Drawings intended for blue printing are sometimes penciled only, or penciled and inked on bond or ledger paper. A print from these papers requires more exposure and has a mottled appearance, showing plainly the texture and watermarks.

326. Tracing cloth is a fine thread fabric, sized and transparentized with a starch preparation. The smooth side is considered by the makers as the right side, but most draftsmen prefer to work on the dull side, principally because it will take a pencil mark. The cloth should be tacked down smoothly over the pencil drawing and its selvage torn off. It should then be dusted with chalk or prepared pounce and rubbed off with a cloth, to remove the traces of grease which sometimes prevent the flow of ink (a blackboard eraser serves very well for this purpose).

To insure good printing, the ink should be perfectly black, and the outline should be made with a bolder line than would be used on paper, as the contrast of a white line on the blue ground is not so strong as the black line on a white ground. Red ink should not be used unless it is desired to have some lines very inconspicuous. Blue ink will not print well. Sometimes, in maps, diagrams, etc., to avoid confusion of lines, it is desirable to use colored inks on the tracing; if so a little Chinese white added will render them opaque enough to print.

Sometimes, instead of section-lining, sections are indicated by rubbing a pencil tint over the surface on the dull side, or by putting a wash of color on the tracing either on the smooth side or on the dull side. These tints will print in lighter blue than the background.

Ink lines may be removed from tracing cloth by rubbing with a pencil eraser. A triangle should be slipped under the tracing to give a harder surface. The rubbed surface should afterward be burnished with an ivory or bone burnisher, or with a piece of talc (tailor's chalk) or, in the absence of other means, with the thumb nail. Do not take up a blot with a blotter but scoop it up with the finger, leaving a smear. Erase the smear when dry, with a pencil eraser. In tracing a part that has been section-lined, a piece of white paper should be slipped under the cloth and the section-lining done without reference to the drawing underneath.

For an unimportant piece of work it is possible to make a freehand tracing from an accurate pencil drawing in perhaps one-half the time required for a mechanical drawing.

Tracing cloth is very sensitive to atmospheric changes, often expanding over night so as to require restretching. If the complete tracing cannot be finished during the day some views should be finished, and no figure left with only part of its lines traced. In making a large tracing, if cloth is used from the roll, it is well to cut off the piece required and lay it exposed flat for a short time before tacking it down.

Water will ruin a tracing, and moist hands or arms should not come in contact with the cloth. The habit should be formed of keeping the hands off drawings. It is a good plan, in both drawing and tracing on large sheets, to cut a mask of drawing paper to cover all but the view being worked on. Unfinished drawings should always be covered over night.

Sometimes it is desired to add an extra view, or a title, to a print without putting it on the tracing. This may be done by drawing the desired additions on another piece of cloth the same size as the original and printing the two tracings together.

Tracings may be cleaned of pencil marks and dirt by rubbing over with a rag or waste dipped in benzine or gasolene. To prevent smearing in cleaning, titles if printed from type on tracing cloth should be printed in an ink not affected by benzine. Local printers are often unable to meet this requirement, but there are firms which make a specialty of this kind of printing.

Soft cloths for penwipers may be made by washing the starch out of scrap tracing cloth.

The tracing is a "master drawing" and should never be allowed to be taken out of the office, but prints may be made from it by

one of the processes described below. Any number of prints may be taken from one tracing.

327. Blue Printing.—The simplest of the printing processes is blue printing, made by exposing a piece of sensitized paper in contact with the tracing to sunlight or electric light in a printing frame made for the purpose. The blue print paper is a white paper free from sulphites, coated with a solution of citrate of iron and ammonia, and ferricyanide of potassium. On exposure to the light a chemical action takes place, which when fixed by washing in water gives a strong blue color. The parts protected from the light by the black lines of the tracing wash out, leaving the white paper. Blue print paper is usually bought ready sensitized, and may be had in different weights and different degrees of rapidity. When fresh it is of a yellowish-green color, and an unexposed piece should wash out perfectly white. With age or exposure to light or air, it turns to a darker gray-blue color and spoils altogether in a comparatively short time. In some emergency, it may be necessary to prepare blue print paper. The following formula will give a paper requiring about three minutes' exposure in bright sunlight.

1. Citrate of iron and ammonia (brown scales) 2 ounces, water 8 ounces
2. Red prussiate of potash 1½ ounces, water 8 ounces

Keep in separate bottles away from the light.

To prepare paper take equal parts of (1) and (2) and apply evenly to the paper with a sponge or camel's-hair brush, by subdued light.

328. To Make a Blue Print.—Lay the tracing in the frame with the inked side toward the glass, and place the paper on it with

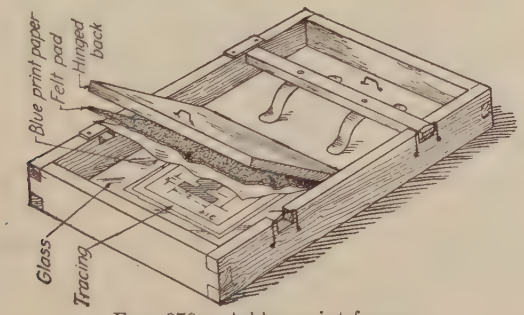

FIG. 670.—A blue print frame.

its sensitized surface against the tracing. Lock up in the frame so there is a perfect contact between paper and cloth. See that no corners are turned under. Expose to the sunlight or electric

light. If a frame having a hinged back is used, Fig. 670, one side may be opened for examination. When the paper is taken from the frame it will be a bluish-gray color with the heavier lines lighter than the background, the lighter lines perhaps not being distinguishable. Put the print for about five minutes in a bath of running water, taking care that air bubbles do not collect on

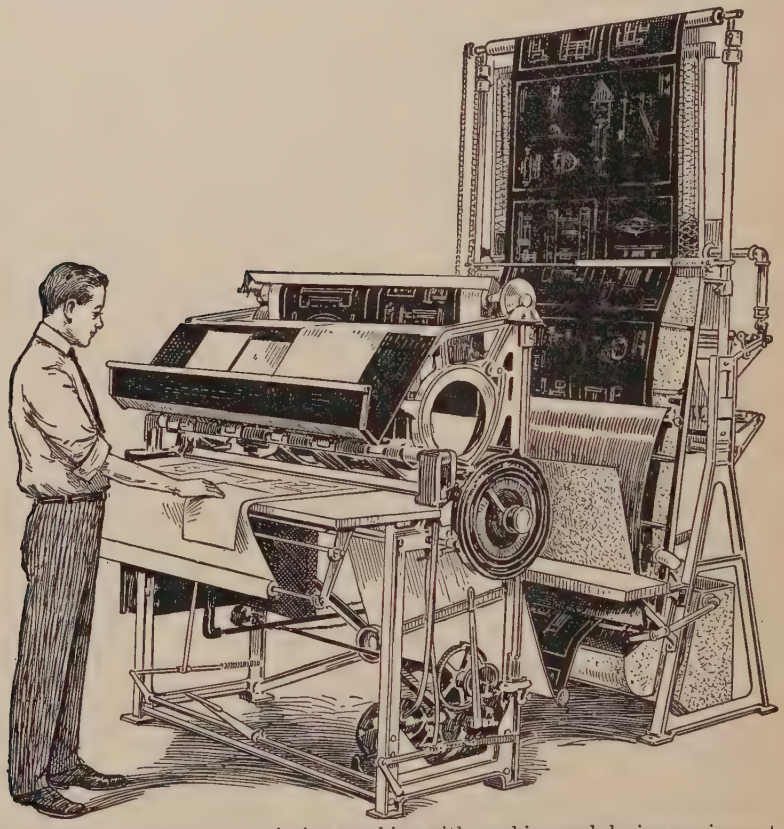

Fig. 671.[1]—Electric blue printing machine with washing and drying equipment.

the surface, and hang up to dry. An overexposed print may often be saved by prolonged washing. The blue color may be intensified and the white cleared by dipping the print for a moment into a bath containing a solution of potassium bichromate (1 to 2 ounces of crystals to a gallon of water), and rinsing thoroughly. This treatment will bring back a hopelessly

[1] Manufactured by the C. F. Pease Company, Chicago.

"burned" print. Sodium bichromate is a cheaper substitute sometimes used. Prints may be cleared successfully by dipping in a bath of hydrogen peroxide, 1 ounce to the gallon.

To be independent of the weather most concerns use electric printing machines, either *cylindrical*, in which a lamp is lowered automatically inside a glass cylinder about which the tracing and paper are placed, or *continuous*, in which the tracing and paper are fed through rolls, and in some machines printed, washed, "pot-ashed" and dried in one operation. Figure 671 is a machine of this type.

Blue print making is a recognized business, and blue print concerns are found in every city. Many manufacturers and architects find it more satisfactory and economical to send their tracings out for printing than to maintain a blue print room.

329. Changes are made on blue prints by writing or drawing with any alkaline solution, such as of soda or potash, which bleaches the blue. Potassium oxalate is the best. A little gum arabic will prevent spreading. A tint may be given by adding a few drops of red or other colored ink to the solution. Chinese white is sometimes used for white line changes on a blue print.

A blue print may be made from a drawing made in pencil or ink on bond paper or tracing paper, but with thick drawing paper the light will get under the lines and destroy the sharpness. A print may be made from Bristol or other heavy white paper by turning it with the ink side against the paper, thereby reversing the print, or by first making a Van Dyke negative, or it may be soaked in benzine and printed while wet. The benzine will evaporate and leave no trace.

A clear blue print may be made from a typewritten sheet which has been written with a sheet of carbon paper back of it, so that it is printed on both sides.

In an emergency it is possible to make a fair print by holding tracing and paper to the sunlight against a window pane.

Any white paper may be rendered sufficiently translucent to give a good blue print by transparentizing with a solution of paraffin cut in benzine, or with a solution sold by drawing materials dealers.

A blue-line print may be taken from a blue print by fading the blue of the first print in weak ammonia water, washing thoroughly, then turning it red in a weak solution of tannic acid and washing again. Transparentizing at this stage will assist.

In printing a number of small tracings they may be fastened together at their edges and handled as a single sheet.

330. The Ozalid process is coming into extensive use both in this country and abroad as an improvement over blue printing, as it gives a direct print with dark lines on a white ground and is not distorted by shrinkage since it is not washed and dried. The prints are made from tracings, in a blue print machine, then are developed, or fixed, by exposing dry, to the fumes of strong aqua ammonia in a tube developer as shown in Fig. 672, or for large production in a continuous developing machine.

Fig. 672.—Ozalid developer.

331. Other Printing Processes.—*Van Dyke paper* is a thin sensitized paper which turns dark brown on exposure and fixing by first washing in water, then in hyposulphite of soda, and again thoroughly in water. A reversed negative of a tracing may be made on it by exposing with the inked side next to the sensitized side of the paper, and this negative printed on blue print paper, giving a blue-line print.

Photostat prints are extensively used by large corporations. By this method a print with white lines on a dark background is made directly in a large, specially designed camera, to any desired reduction or enlargement. This print may be again photographed, giving a brown-line print with a white ground.

Tracings are duplicated successfully, giving exact reproductions in black ink on tracing cloth or paper by a gelatine process in which a special "transfer" print is made on a blue print machine and transferred to a gelatine-surfaced table, the impression inked and prints pulled from it. This kind of work is done by The Lithoprint Company, 41-43 Warren Street, New York.

In another method of duplicating tracings, as done by the Frederick Post Company of Chicago, the transfer is made directly on sensitized waterproof tracing cloth.

The methods of the hectograph or gelatine pad, neostyle, mimeograph, etc., often used for duplicating small drawings, are too well known to need description here.

332. Drawing for Reproduction.—By this term is meant the preparation of drawings for reproduction by one of the photo-

mechanical processes used for making plates, or "cuts," as they are often called, for printing purposes. Such drawings willbe required

FIG. 673.—Drawing for one-half reduction.

in the preparation of illustrations for books and periodicals, for catalogues or other advertising, and incidentally for Patent Office drawings, which are reproduced by photolithography.

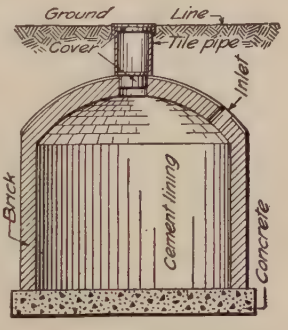

FIG. 674.—One-half reduction.

Line drawings are usually reproduced by the process known as zinc etching, in which the drawing is photographed on a process plate, generally with some reduction, the negative film reversed and printed so as to give a positive on a sensitized zinc plate (when a particularly fine result is desired, a copper plate is used) which is etched with acid, leaving the lines in relief and giving, when mounted type-high on a wood base, a block which can be printed along with type in an ordinary printing press.

Drawings for zinc etching should be made on smooth white paper or tracing cloth in black drawing ink, and preferably larger than the required reproduction.

If it is desired to preserve the hand-drawn character of the original, the reduction should be slight; but if a very smooth effect

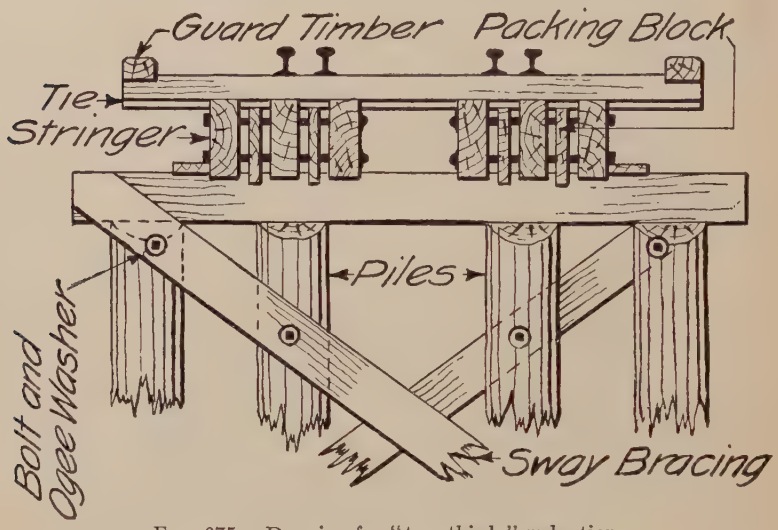

FIG. 675.—Drawing for "two-thirds" reduction.

is wanted, the drawing may be as much as three or four times as large as the cut. The best general size is from one and one-half to two times linear. Figure 673 illustrates the appearance of an original drawing and Fig. 674 the same drawing reduced one-half.

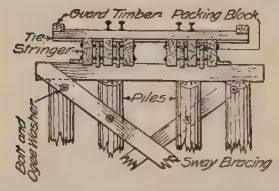

FIG. 676.—"Two-thirds" reduction.

Figure 675 is another original which has been reduced two-thirds, Fig. 676. The coarse appearance of these originals and the open shading should be noticed.

A reducing glass, a concave lens mounted like a reading glass, is sometimes used to aid in judging the appearance of a drawing on reduction. If lines are drawn too close together the space between them will choke in the reproduction and mar the effect.

One very convenient thing not permissible in other work may be done on drawings for reproduction—any irregularities may be

corrected by simply painting out with water-color white. If it is desired to shift a figure after it has been inked it may be cut out and pasted on in the required position. The edges thus left will not trouble the engraver, as they will be tooled out when the etching is finished.

Wash drawings and photographs are reproduced in a similar way on copper by what is known as the half-tone process, in which the negative is made through a ruled "screen" in front of the plate, which breaks up the tints into a series of dots of varying size. Screens of different fineness are used for different kinds of paper, from the coarse screen newspaper half-tone of 80 to 100 lines to the inch, the ordinary commercial and magazine half-tone of 133 lines, to the fine 150 and 175 line half-tones for printing on very smooth coated paper.

Photographic prints for reproduction are often retouched and worked over, shadows being strengthened with water color, high lights accented with white, and details brought out that would otherwise be lost. In catalogue illustration of machinery etc., objectionable backgrounds or other features can be removed entirely. Commercial retouchers use the air-brush as an aid in this kind of work, spraying on color with it very rapidly and smoothly and securing results not possible in hand work.

So-called "phantom drawings" or "X-ray drawings" are made in this way, sometimes using a double exposure negative as a basis.

The "Ben Day" film is another aid in commercial illustration that is used very extensively. Figure 16 is a simple example.

Line illustrations are sometimes made by the "wax process" in which a blackened copper plate is covered with a very thin film of wax, on which a drawing may be photographed and its outline scratched through the wax by hand with different sized gravers. The lettering is set up in type and pressed into the wax; more wax is then piled up in the wider spaces between the lines and an electrotype taken. Drawings for this process need not be specially prepared, as the work may be done even from a pencil sketch or blue print. Wax plates print very clean and sharp and the type-lettering gives them a finished appearance, but they lack the character of a drawing, are more expensive than zinc etching and often show mistakes due to the lack of familiarity of the engraver with the subject. Figure 677 shows the characteristic appearance of a wax plate.

Maps and large drawings are usually reproduced by lithography, in which the drawing is either photographed or engraved on a lithographic stone, and transferred from this either to

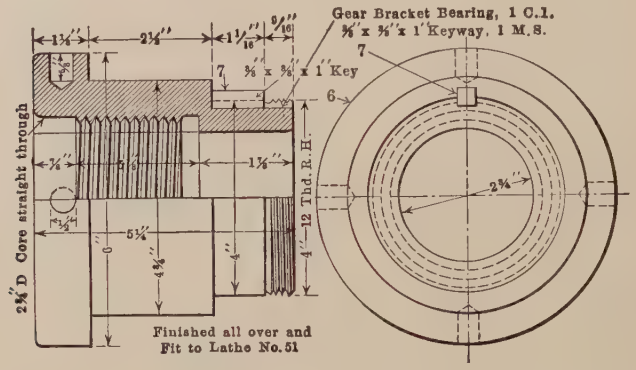
Gear Bracket Bearing, 1 C.I.
⅝" x ⅜" x 1" Keyway, 1 M.S.
7
⅜" x ⅜" x 1" Key
6
2¾" D Core straight through
12 Thd. R.H.
Finished all over and
Fit to Lathe No. 51

FIG. 677.—A wax plate.

another stone from which it is printed or in the offset process to a thin sheet of zinc which is wrapped around a cylinder, and prints to a rubber blanket which in turn prints on the paper.

CHAPTER XX

Shade Lines and Line Shading

333. Shade Lines.—The general practice in working drawings is to use a uniform bold full line for the visible outline. It is possible by using two weights of lines to add something to the clearness and legibility of a drawing, and at the same time to give its appearance a relief and finish very effective and desirable in some classes of work. This is used to advantage in such cases as the illustrations seen in technical periodicals, where space is limited and where the definition of *shape* is the predominant feature. By the use of shade lines a single view will often serve the desired purpose, and can therefore be made to larger scale, with consequent clearness of detail.

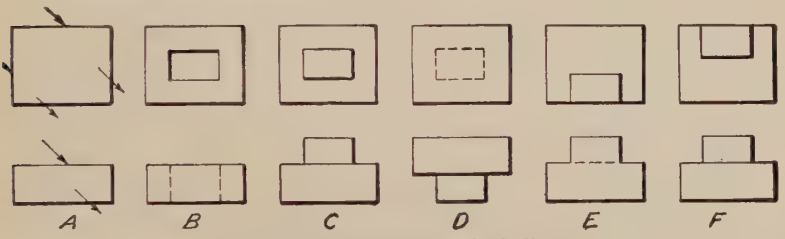

Fig. 678.—Conventional shade lines.

Shade lines are required on Patent Office drawings, and are used in a few shops on assembly drawings, but for ordinary shop drawings the advantage gained is much overbalanced by the increased cost. It is correct to use them whenever the gain in legibility and appearance is of sufficient importance to warrant the expenditure of the added time and skill necessary.

Theoretically the shade-line system is based on the principle that the object is illuminated from one source of light at an infinite distance, the rays coming from the left in the direction of the body diagonal of a cube, so that the two projections of any ray each make an angle of 45° with the ground line. Part of the object would thus be illuminated and part in shade, and a shade line is a line separating a light face from a dark face. The strict

application of this theory involves some trouble, and it is never followed out in practice, but the one simple rule of shading the lower and right-hand lines of all views is observed, Fig. 678. The method of determining which lines are shaded is illustrated in Fig. 679, which shows the treatment of lines representing surfaces parallel and nearly parallel to the direction of the light.

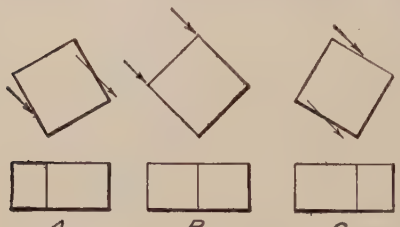

Fig. 679.—Determination of shade lines.

The light lines should be comparatively fine and the shade lines about three times as wide. The width of the shade line is added outside the surface of the piece, Fig. 680. They are never drawn in pencil but their location may be indicated, if desired, by a mark on the line. The method of shading two pieces in combination is illustrated in Fig. 681. At *A* the faces of parts 1 and 2 are in the same plane, the line of the joint is consequently a fine line. At *B* and *C* the faces are not in the same plane. It will be observed that dotted lines are never shaded.

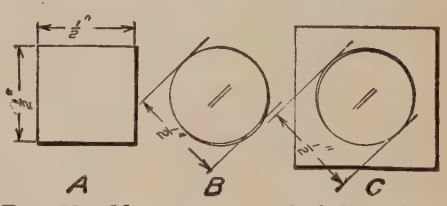

Fig. 680.—Measurements on shaded drawings.

In inking a shaded drawing it is important to follow the order of inking carefully. Ink (1) light arcs, (2) light to heavy arcs, (3) heavy arcs, (4) light lines, (5) heavy lines.

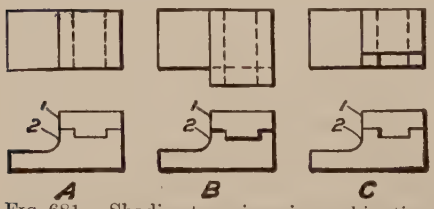

Fig. 681.—Shading two pieces in combination.

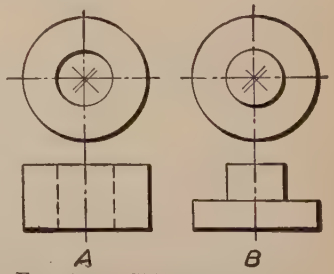

Fig. 682.—Shifting the center.

A circle may be shaded by shifting the center on a 45° line toward the lower right-hand corner, to an amount equal to the thickness of the shade line, and drawing another semicircular

arc with the same radius, Fig. 682; or it may be done much more quickly, particularly with small circles, after the "knack" has been acquired, by keeping the needle in the center after drawing the circle, and springing the needle-point leg out and back gradually while going over the half to be shaded, pressing with the middle finger in the position of Fig. 683. Never shade a circle arc so that it appears heavier than the straight lines.

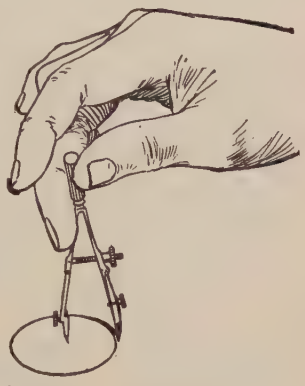

Fig. 683.—Springing the point.

A comparison of two drawings of the same object is shown in Fig. 684. By covering the lower views the aid in reading given by the shade lines will be apparent.

Shade lines in isometric drawing have no value so far as aiding in the reading is concerned, but they may by their contrast add

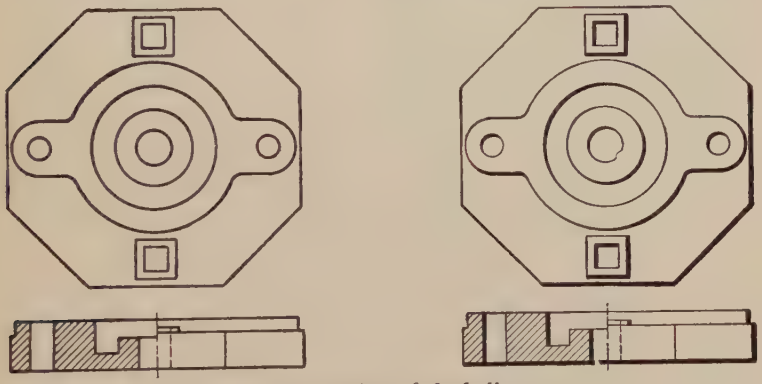

Fig. 684.—Effect of shade lines.

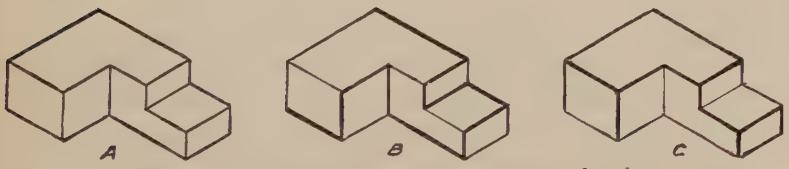

Fig. 685.—Two methods of shading isometric drawings.

some attractiveness to the appearance. Assuming the light as coming from the left in the direction of the body diagonal of the

isometric cube, and disregarding shadows, shade lines separating light from dark faces would appear as at B in Fig. 685. Another method popular among patent draftsmen and others using this kind of drawing for illustration is to bring out the nearest corner with heavy lines as at C.

334. Line Shading.—Line shading is a method of representing the effect of light and shade by ruled lines. It is an accomplishment not usual among ordinary draftsmen as it is not used on working drawings and the draftsman engaged in that work does not have occasion to apply it. It is used on display drawings,

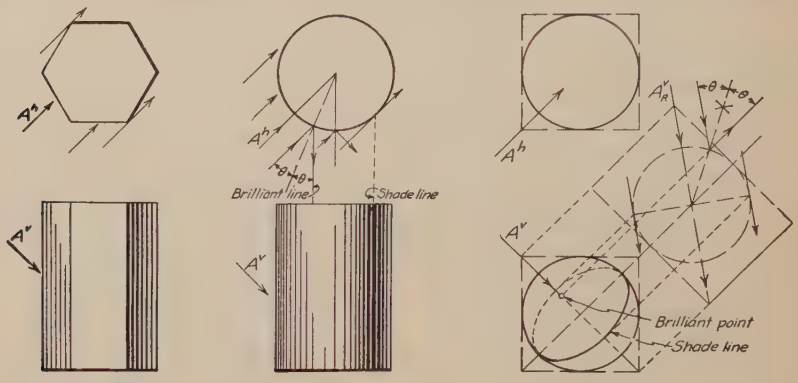

Fig. 686. Fig. 687. Fig. 688.

Figs. 686–688.—The theory of line shading.

illustrations, Patent Office drawings and the like, and is worthy of study if one is interested in this class of finished work.

To execute line shading rapidly and effectively requires continued practice and some artistic ability, and, as much as anything else, good judgment in knowing when to stop. Often the simple shading of a shaft or other round member will add greatly to the effectiveness of a drawing and may even save making another view; or a few lines of "surface shading" on a flat surface will show its position and character. The pen must be in perfect condition, with its screw working very freely.

335. Theory of Line Shading.—The theoretical direction of the light is, as already mentioned, in the direction of the body diagonal of a cube. Thus the two projections of a ray of light would be as A^h and A^v, Fig. 686, and two visible faces of the hexagonal prism would be illuminated, while one is in shade. It is immediately observed that the theoretical shade lines differ from

the conventional ones as used in the preceding discussion. The figure illustrates the rule that *an inclined illuminated surface is lightest nearest the eye and an inclined surface in shade is darkest nearest the eye.*

A cylinder would be illuminated as in Fig. 687. Theoretically the darkest place is at the tangent or "shade line" and the lightest part at the "brilliant line" where the light is reflected directly to the eye. Cylinders shaded according to this theory are the most effective, but often in practice the dark side is carried out to the edge, and in small cylinders the light side is left unshaded.

A method of finding the brilliant point and shade line of a sphere is shown in Fig. 688. An auxiliary view of the sphere and circumscribing cube is taken parallel to the body diagonal of the cube, and the angle between the ray of light and the center line to the eye bisected, giving the brilliant point. Tangents locate the shade line.

336. Practice.—Three preliminary exercises in flat and graded tints are given in Fig. 689. In these the pitch, or distance from

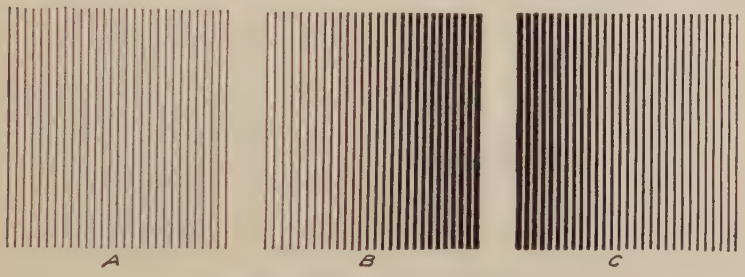

FIG. 689.—Flat and graded tints.

center to center of lines is equal. In wide-graded tints, as *B* and *C*, the setting of the pen is not changed for every line, but several lines are drawn, then the pen changed and several more drawn.

Figure 690 is a row of cylinders of different sizes. The effect of polish is given by leaving several brilliant lines, as might occur if the light came in through several windows. A conical surface may be shaded by driving a fine needle at the apex and swinging a triangle about it as in *A*, Fig. 691. To avoid a blot at the apex of a complete cone the needle may be driven on the extension of the side as in *B* or the lines may be drawn parallel to the sides as in *C*.

It is in the attempt to represent double-curved surfaces that the line-shader meets his principal troubles. The brilliant line

becomes a brilliant point and the tangent shade line a curve, and to represent the gradation between them by mechanical lines is a difficult proposition.

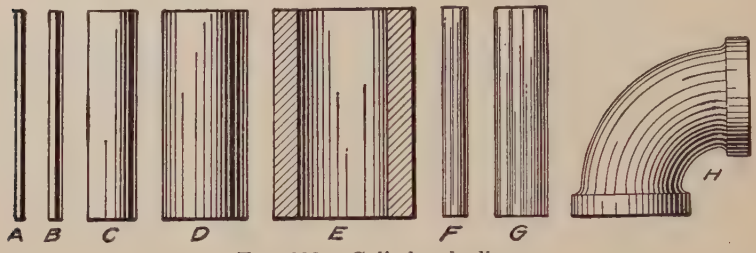

Fig. 690.—Cylinder shading.

Three methods of shading a sphere are shown in Fig. 692. The first one, *A*, is the commonest. Concentric circles are drawn from the center, with varying pitch, and shaded on the lower side by springing the point of the compasses. At *B* the brilliant point,

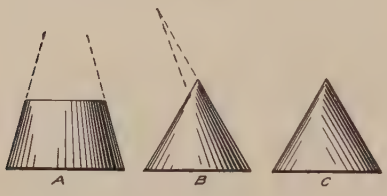

Fig. 691.—Cone shading.

Fig. 692.—Sphere shading.

usually "guessed in," is used as a center. At *C*, the "wood cut" method, the taper on the horizontal lines is made by starting with the pen out of the perpendicular plane and turning the handle up as the line progresses.

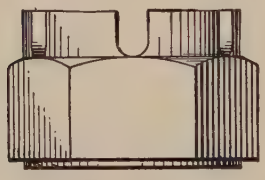

Fig. 693.

Applications of shading on flat and cylindrical surfaces are shown in Figs. 693 and 694; spherical surfaces in Fig. 695, and knurling in Fig. 696.

337. Patent Office Drawings.—In the application for letters patent on an invention or discovery there is required a written description called the "specification," and in case of a machine, manufactured article, or device for making it, a drawing, showing every feature of the invention. If it is an improvement, the drawing must show the invention separately, and in another view a part of the old structure with the invention attached.

A high standard of execution, and conformity to the rules of the Patent Office must be observed. A pamphlet called the "Rules of Practice," giving full information and rules governing Patent Office procedure in reference to application for

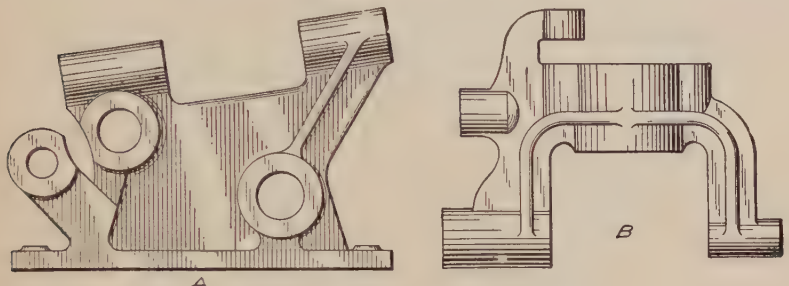

FIG. 694.—Application of line shading.

patents may be had gratuitously by addressing the *Commissioner of Patents, Washington, D. C.*

The drawings are made on smooth white paper specified to be of a thickness equal to three-sheet Bristol-board. Two-ply Reynolds boards is the best paper for the purpose, as prints may

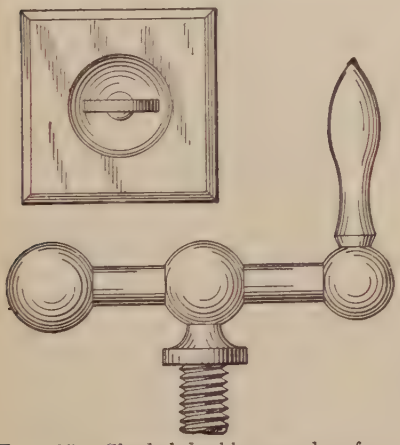

FIG. 695.—Shaded double curved surfaces.

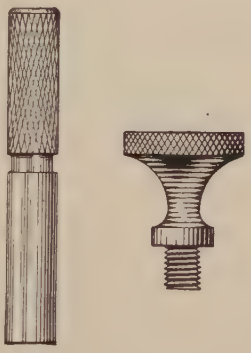

FIG. 696.—Knurling.

be made from it readily, and it is preferred by the Office. The sheets must be exactly 10 by 15 inches, with a border line 1 inch from the edges. Sheets with border and lettering printed, as Fig. 697, are sold by the dealers, but are not required to be used. A space of not less than 1¼ inches inside of the top border must be left blank for the printed title added by the Office.

Drawings must be in black ink, and drawn for a reproduction to reduced scale. As many sheets as are necessary may be used. In the case of large views any sheet may be turned on its side so that the heading is at the right and the signatures at the left, but all views on the same sheet must stand in the same direction.

Patent Office drawings are not working drawings. They are descriptive and pictorial rather than structural, hence will have no center lines, no dimension lines nor figured dimensions, no notes nor names of views. The scale chosen should be large enough to show the mechanism without crowding. Unessential details or shapes need not be represented with constructional accuracy, and parts need not be drawn strictly to scale. For example, the section of a thin sheet of metal drawn to scale might be a very thin single line, but it should be drawn with a double line and section lined between.

Fig. 697.—Blank for patent drawing.

Section lining must not be too fine. One-twentieth of an inch pitch is a good limit. Solid black should not be used except to represent insulation or rubber. Shade lines are always added, except in special cases where they might confuse or obscure instead of aid in the reading. Surface shading by line shading is used whenever it will add to the legibility, but it should not be thrown in indiscriminately or lavishly simply to please the client.

Gears and toothed wheels must have all their teeth shown, and the same is true of chains, sprockets, etc., but screw threads may be represented by the conventional symbols. The *Rules of Practice* gives a chart of electrical symbols, symbols for colors, etc., which should be followed.

The drawings may be made in orthographic, axonometric, oblique, or perspective. The pictorial system is used extensively, for either all or part of the views. The examiner is, of course,

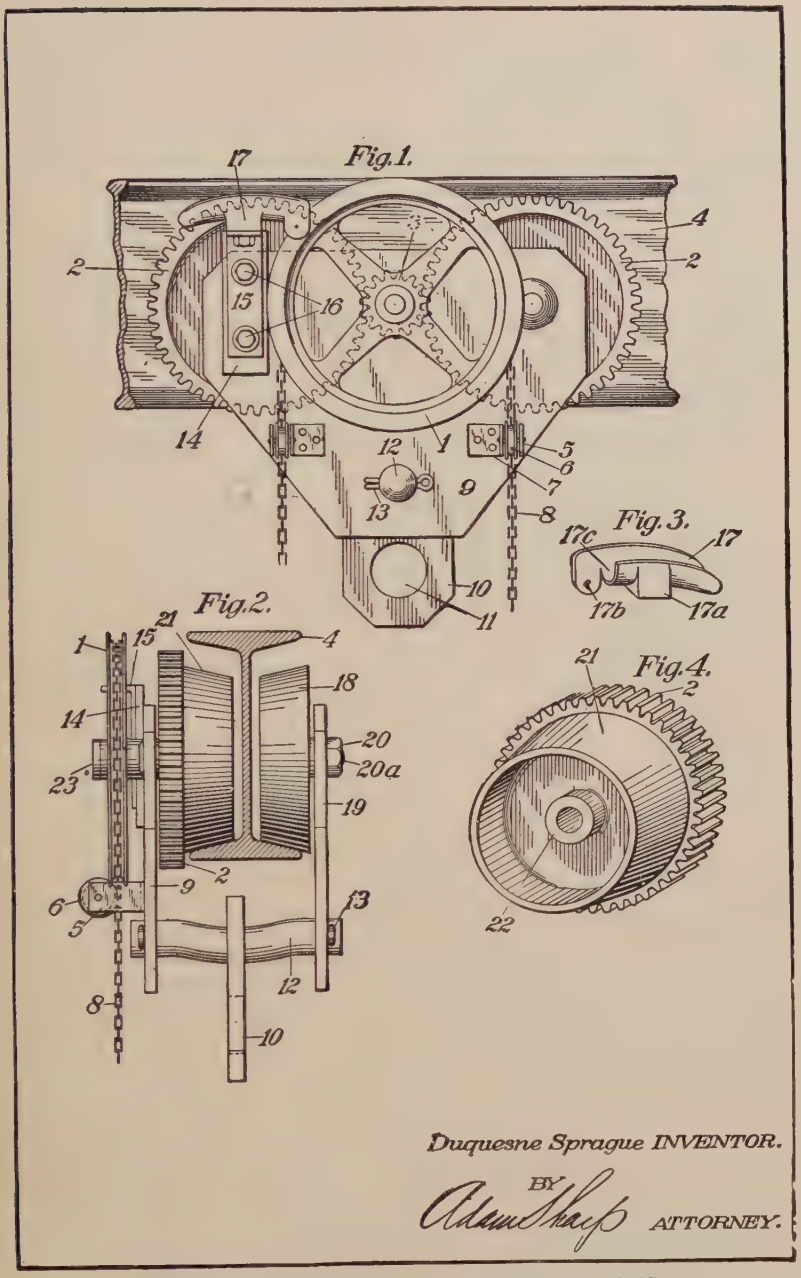

Fig. 698.—A patent office drawing (reduced one-half).

expert in reading drawings, but the client, and sometimes the attorney, may not be, and the drawing should be clear to them. In checking the drawing for completeness it should be remembered that in case of litigation it may be an important exhibit in the courts. Only in rare cases is a model of an invention required by the Office.

The views are lettered "Fig. 1," "Fig. 2," etc., and the parts designated by reference numbers through which the invention is described in the specification. One view, generally "Fig. 1," is made as a comprehensive view that may be used in the *Official Gazette* as an illustration to accompany the "claims."

The inventor signs the drawing in the lower right-hand corner. In case an attorney prepares the application and drawing, the attorney writes or letters the name of the inventor, signing his own name underneath as his attorney.

To avoid making tack holes in the paper it should be held to the board by the heads of the thumb tacks only.

The requirements for drawings for foreign patents vary in different countries, most countries requiring drawings and several tracings of each sheet.

Figure 698 is an example of a Patent Office drawing, reduced to one-half size.

CHAPTER XXI

Notes on Commercial Practice

338. There are many items of practical information of value to the student and draftsman which are not included in the ordinary course in drawing, but are learned through experience. This chapter tells approved methods of accomplishing a few of the things necessary in the commercial uses of drawing. It is not intended to be complete, but suggests kinds of information which are worth collecting and preserving in notebook form.

339. To Sharpen a Pen.—Pens that are in constant use require frequent sharpening and every draftsman should be able to keep

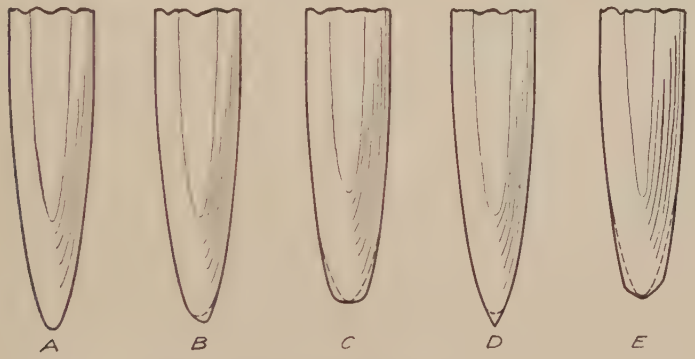

Fig. 699.—Corrected ruling pen points.

his own pens in fine condition. The points of a ruling pen should have an oval or elliptical shape as *A*, Fig. 699, with the nibs exactly the same length. *B* is a worn pen and *C*, *D* and *E* incorrect shapes sometimes found. The best stone to use is a hard Arkansas knife piece or knife edge. It is best to soak a new stone in oil for several days before using. The ordinary carpenter's oil stone is too coarse to be used for instruments.

The nibs must first be brought to the correct shape as *A* and as indicated on the dotted lines of *B*, *C* and *D*. This is done by screwing the nibs together until they touch and, holding the pen

as in drawing a line, drawing it back and forth on the stone, starting the stroke with the handle at perhaps 30 degrees with the stone, and swinging it up past the perpendicular as the line across the stone progresses. This will bring the nibs to exactly equal shape and length, leaving them very dull. They should then be opened slightly and each blade sharpened in turn until the bright spot on the end has just disappeared, holding the pen as in Fig. 700 at a small angle with the stone and rubbing it back and forth with a slight oscillating or rocking motion to conform to the shape of the blade. A stone three or four inches long held in the left hand with thumb and fingers gives a better control than one laid on the table. Some prefer to hold the pen in the left hand and sharpen by rubbing it with the stone held in the right hand. The pen should be examined frequently and the operation stopped just when the reflecting spot has vanished. A pocket magnifying glass may be of aid in examining the points. The blades should not be sharp enough to cut the paper when tested by drawing a line, without ink, across it. If oversharpened, the blades should again be brought to touch and a line drawn very lightly across the stone as in the first operation. When tested with ink the pen should be capable of drawing clean sharp lines down to the finest hair line. If these finest lines are ragged or broken the pen is not perfectly sharpened. It should not be necessary to touch the inside of the blades unless a burr has been formed, which might occur with very soft metal or by using too coarse a stone. In such cases the blades should be opened wide and the burr removed by a very light touch, with the entire inner surface of the blade in contact with the stone, which of course must be sufficiently thin to be inserted between the blades. The beginner had best practice by sharpening several old pens before attempting to sharpen a good instrument. After using, the stone should be wiped clean and a drop of oil rubbed over it to prevent hardening and glazing.

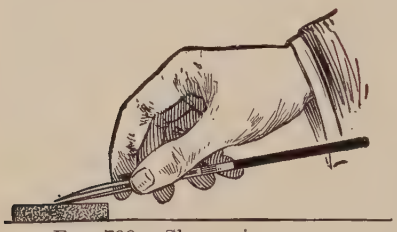

FIG. 700.—Sharpening a pen.

340. Stretching Paper.—If a drawing is to be tinted the paper should be stretched on the board. First, dampen it thoroughly until limp, either with a sponge or under the faucet, then lay it on

the drawing board face down, take up the excess water from the edges with a blotter, brush glue or paste about one-half inch wide around the edge, turn over and rub the edges down on the board until set, and allow to dry horizontally.

Drawings or maps on which much work is to be done, even though not to be tinted, may be made advantageously on stretched paper; but Bristol or calendered paper should not be stretched.

341. Tinting is done with washes made with moist water colors. The drawing may be inked (with waterproof ink) either before, or preferably after tinting. The drawing should be cleaned and the unnecessary pencil marks removed with a very soft rubber, the tint mixed in a saucer and applied with a camel's-hair or sable brush, inclining the board and flowing the color with horizontal strokes, leading the pool of color down over the surface, taking up the surplus at the bottom by wiping the brush out quickly and picking up with it the excess color. Stir the color each time the brush is dipped into the saucer. Tints should be made in light washes, depth of color being obtained if necessary by repeating the wash. To get an even color it is well to go over the surface first with a wash of clear water.

Diluted colored inks may be used for washes instead of water color.

342. Mounting Tracing Paper.—Tracings on paper are mounted for display, on white mounts, either by "tipping" or "floating." To tip a drawing, brush a narrow strip of glue or paste around the under edge, dampen the right side of the drawing by stroking with a sponge very slightly moistened, and stretch the paper gently with the thumbs on opposite edges, working from the middle of the sides toward the corners.

To float a drawing make a *very thin* paste and brush a light coat over the entire surface of the mount, lay the tracing paper in position and stretch into contact with the board as in tipping. If air bubbles occur force them out by rubbing from the center of the drawing out, laying a piece of clean paper over the drawing to protect it.

343. Mounting on Cloth.—As a protection to maps and drawings requiring much handling it is advisable to mount them on cloth. The method to be used depends largely upon the weight and quality of the material to be mounted. A method suitable for one case might fail in another, but having a general idea of the

requirements it is possible to vary the method to suit the case. There are two methods used, hot mounting and cold mounting. The adhesives used are photo library paste and liquid glue. The commercial products of each are so easily obtained that a formula for their preparation is unnecessary and the ones to be used are largely a matter of choice and availability.

Hot mounting is the most satisfactory for the average work because of the saving in time. The mounting cloth is usually a first grade of white, light-weight, sheeting. For small work dust-colored dress lining is well suited. This is stretched tightly, and tacked down, over a table which has been previously covered with cloth. The paste is prepared by heating with a small amount of water until the solution becomes clear. With a broad flat brush paste the back of the print quickly, working from the center toward the edges. Allow a moment for uniform expansion, then place face up on the cloth. Have iron hot enough not to scorch, work quickly with rotary motion and iron print from center out until edges are stuck. Remove tacks and raise from table to release steam. Iron until dry. Never iron on the back, as the steam formed will cause blisters. Keep the iron well paraffined and a good gloss will be produced on the print. Liquid glue diluted and heated will work quite as well, but the sheet will not be so flexible and will break if folded too often.

Cold paste may be used instead of hot and is quite satisfactory. The method is practically the same except that a photographic print roller is substituted for the hot iron and the print is allowed to become thoroughly dry before the tacks are removed.

For Mounting Thin Paper.—The cloth is tacked down same as for hot or cold mounting except that several thicknesses of newspaper are placed directly under the cloth. The hot paste is applied directly to the cloth until the cloth is thoroughly filled with paste. The print to be mounted is rolled, face in, from each end toward the center leaving an equal amount of paper in each roll. With one roll in each hand place the print in the center of the pasted area, allowing only a few inches to unroll. Iron quickly same as for hot mounting, unrolling the print as the ironing proceeds.

Another successful method consists in rolling the print to be mounted, face in, on a roll of detail paper. Hot paste is applied beginning at one end, the print rolled off on the cloth, and followed up as fast as unrolled by a hot iron. It is inadvisable to

apply paste to thin paper, unless supported as above, for it curls up so rapidly that it becomes unmanageable and results in the loss of the print.

344. Methods of Copying Drawings.—Pricking.—Drawings are often copied on opaque paper by laying the drawing over the paper and pricking through with a needle point, turning the upper sheet back frequently and connecting the points. Prickers may be purchased, or may be made easily by forcing a fine needle into a soft wood handle. They may be used to advantage also in accurate drawing, in transferring measurements from scale to paper.

345. Transfer by Rubbing.—This method, known as frotté, is very useful, particularly in architectural drawing, in transferring any kind of sketch or design to the paper on which it is to be rendered.

The original is made on any paper, and may be worked over, changed, and marked up until the design is satisfactory. Lay a piece of tracing paper over the original and trace the outline carefully. Turn the tracing over and retrace the outline just as carefully on the other side, using a medium soft pencil with a *sharp* point. Turn back to first position and tack down smoothly over the paper on which the drawing is to be made, registering the tracing to proper position by center or reference lines on both tracing and drawing. Now transfer the drawing by rubbing the tracing with the rounded edge of a knife handle or other instrument (a smooth-edged coin held between thumb and forefinger and scraped back and forth is commonly used), holding a small piece of tracing cloth with smooth side up between the rubbing instrument and the paper, to protect the paper. Do not rub too hard, and be sure that neither the cloth nor paper move while rubbing. Transfers in ink instead of pencil, useful on wash drawings, may be made by tracing with "Encre a poncer," a rubbing ink made for this purpose.

If the drawing is symmetrical about any axis the reversed tracing need not be made, but the rubbing can be made from the first tracing by reversing it about the axis of symmetry.

Several rubbings can be made from one tracing, and when the same figure or detail must be repeated several times on a drawing much time can be saved by drawing it on tracing paper and rubbing it in the several positions.

A very fine transfer of small details may be made by the

engraver's method of tracing on a thin sheet of gelatine or celluloid, scratching the outline lightly with a sharp point, and rubbing colored crayon into the lines.

346. Glass Drawing Board.—A successful device for copying drawings on opaque paper is illustrated in Fig. 701. A wide frame of white pine carrying a piece of plate glass set flush with the top, is hinged to a base lined with bright tin. A sliding bar carries two show-case lamps, whose light may thus be concen-

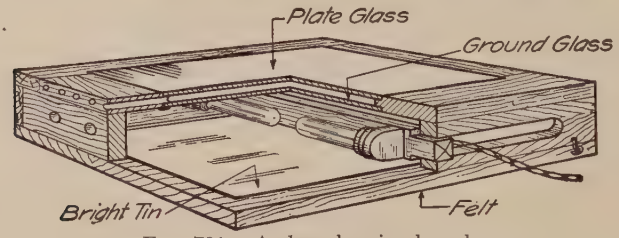

FIG. 701.—A glass drawing board.

trated under any part of the drawing. Ventilation and protection from overheating is provided by the ground glass and air space between it and the plate glass.

The frame has a piece of felt glued on the bottom and may be used on the top of any table where connection with an electric light outlet is convenient. Drawings even in pencil may be copied readily on the heaviest paper or Bristol-board by the use of this device.

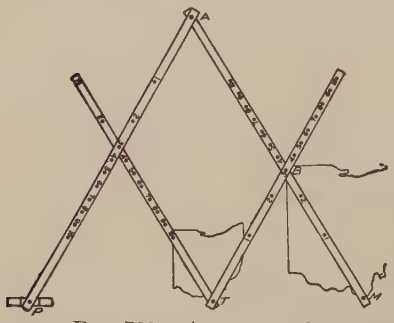

FIG. 702.—A pantograph.

347. Proportional Methods—The Pantograph.—The principle of the pantograph, used for reducing or enlarging drawings in any proportion, is well known. Its use is often of great advantage. It consists essentially of four bars, which for any setting must form a parallelogram, and have the pivot, tracing point, and marking point in a straight line; and any arrangement of four arms conforming to this requirement will work in true proportion Referring to Fig. 702 the scale of enlargement is $PM : PT$ or $AM : AB$. For corresponding reduction the tracing point and marking point are exchanged. The inexpensive wooden form

of Fig. 702 is sufficiently accurate for ordinary outlining. A suspended pantograph with metal arms, for accurate engineering work, is shown in Fig. 703.

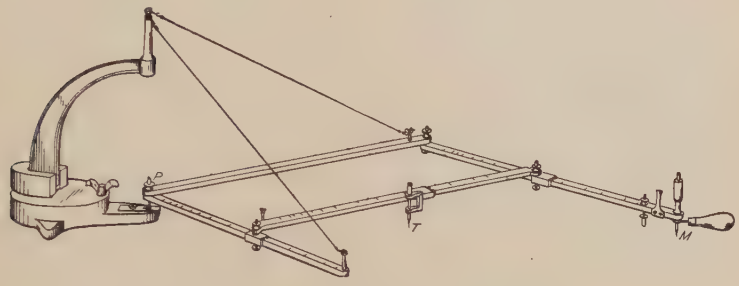

Fig. 703.—A suspended pantograph.

Drawings may be copied to reduced or enlarged scale by using the **proportional dividers,** as illustrated in Fig. 704. The divisions marked "lines" are linear proportions, those marked

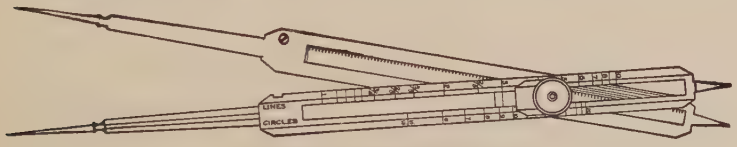

Fig. 704.—Proportional dividers.

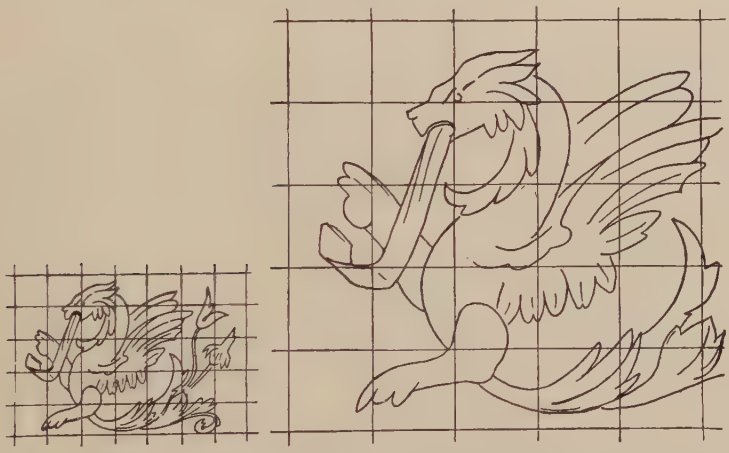

Fig. 705.—Enlargement by squares.

"circles" give the setting for dividing a circle into a desired number of equal parts when the large end is opened to the diameter of the circle.

The well-known method of **proportional squares** is often used for reduction or enlargement. The drawing to be copied is ruled in squares of convenient size, or, if it is undesirable to mark on the drawing, a sheet of ruled tracing cloth or celluloid is laid over it, and the copy made freehand on the paper, which has been ruled in corresponding squares, larger or smaller, Fig. 705.

In emergency the **rubber band method** of enlarging may be used. Using a band wide enough, mark along it the distances to be enlarged. When the band is stretched these distances will stretch proportionately.

348. Preserving Drawings.—A drawing, tracing, or blue print which is to be handled much may be varnished with a thin coat of white shellac.

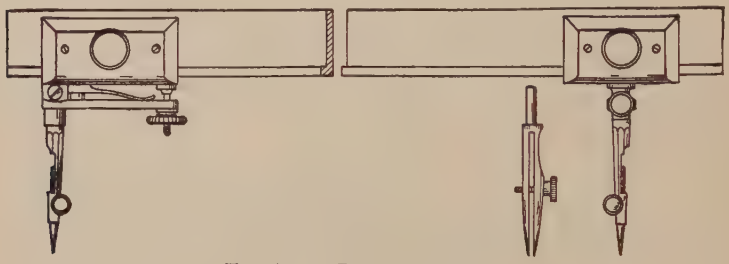

FIG. 706.—Beam compasses.

Pencil drawings may be sprayed with fixatif.

Prints made on sensitized cloth will withstand hard usage.

Blue prints for shop use are often mounted for preservation and convenience, by pasting on tar board or heavy press-board and coating with white shellac or Damar varnish. A coat of white glue under the varnish will aid still further in making the drawings washable.

Tracings to which more or less frequent reference will be made should be filed flat in shallow drawers. Sets of drawings preserved only for record are often kept in tin tubes numbered and filed systematically. A pasteboard tube with screw cover is also made for this purpose. It is lighter than tin and withstands fire and water even better.

Fireproof storage vaults should always be provided in connection with drafting rooms.

349. Special Instruments.—There are some instruments not in the usual assortment that are occasionally needed. **Beam compasses** are used for circles larger than the capacity of ordinary

compasses with lengthening bar. A good form is illustrated in Fig. 706.

With the **drop pen** or rivet pen, Fig. 707, smaller circles can be made, and made much faster than with the bow pen. It is held as shown, the needle point stationary and the pen revolving around it. It is of particular convenience in bridge and structural work, and in topographic drawing.

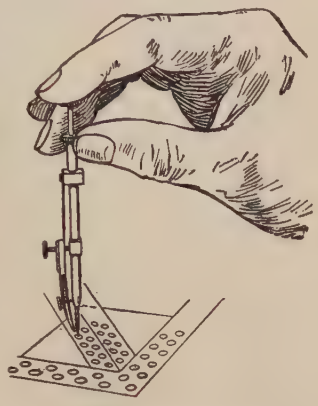

Fig. 707.—A drop pen.

Several instruments for drawing ellipses have been made. The **ellipsograph,** Fig. 708, is a very satisfactory one.

Three special pens are shown in Fig. 709. The **railroad pen,** *A*, is used for double lines. A better pen for double lines up to ¼ inch apart is the **border pen,** *B*, as it can be held down to the paper more satisfactorily. It may be used for very wide solid lines by inking the middle space as well as the two pens. The **contour pen** or curve pen, *C*, made with a swivel is used in map work for freehand curves.

Several special **lettering pens** are shown in Fig. 710.

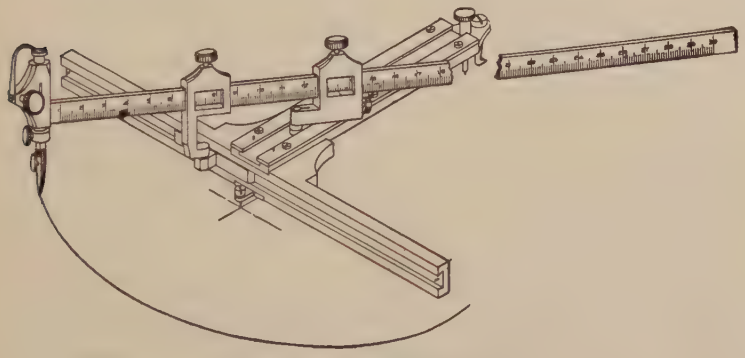

Fig. 708.—An ellipsograph.

A **protractor** is a necessity in map and topographical work. A semicircular brass or nickel-silver one, 6 inches in diameter, such as Fig. 711, will read to half degrees. They may be had with an arm and vernier reading to minutes. Large circular paper protractors 8 and 14 inches diameter reading to ½ and ¼ degrees are

used and preferred by some map draftsmen. Others prefer the "Brown and Sharpe" protractor of Fig. 712, reading to five minutes.

Two combinations of triangle and protractor popular with architects and draftsmen are shown in Figs. 713 and 714. Numerous different forms of combination "triangles" have been devised, of which several are shown in Fig. 715.

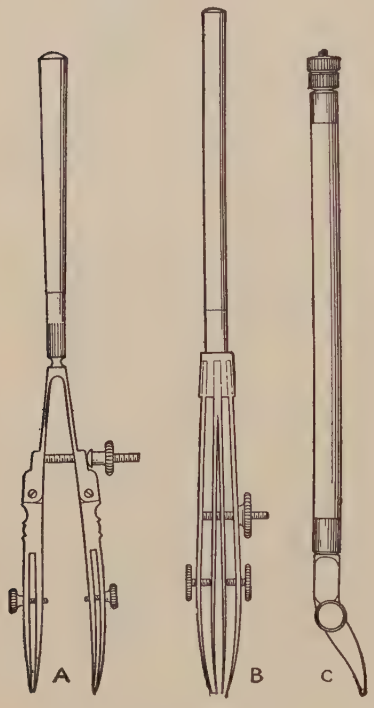

FIG. 709.—Special pens.

The Universal Drafting Machine.—Figure 716, which combines the functions of T-square, triangles, scale and protractor, has had the test of years of use, and is used extensively in large drafting rooms and by practising engineers and designers. It has been estimated that 35 per cent of time in machine drawing and over 50 per cent in civil engineering work is saved by its use.

Vertical drawing boards with sliding parallel straight edges are preferred by some for large work.

Bottle holders prevent the possibility of ruining the drawing, table or floor by the upsetting of the ink bottle. Figure 717 shows a common form and also a specialty of the Alteneder Co., by the aid of which the pen may be filled with one hand and time saved thereby.

Curves.—Some irregular curves were illustrated in Fig. 16. Many others are sold. Sometimes it is advisable for the draftsman to make his own templet for special or recurring curves. These may be cut out of thin holly or basswood, sheet lead, celluloid or even cardboard or pressboard. Flexible curved rulers of different kinds are sold. A copper wire or piece of wire solder has been used as a homemade substitute.

The curve illustrated in Fig. 718 has been found particularly useful for engineering diagrams, steam curves, etc. It is plotted

on the polar equation $r = A \sec. \theta + K$ in which A may be about $5\frac{1}{2}$ inches and K 8 inches.

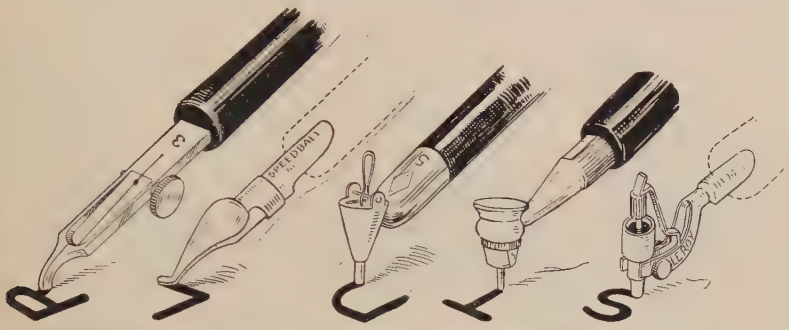

FIG. 710.—Barch-Payzant, speedball, perfection, Edco and Leroy pens.

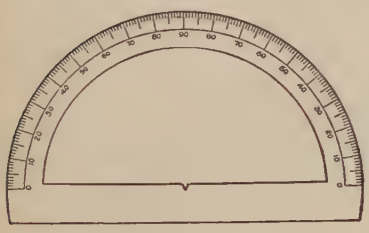

FIG. 711.—Protractor.

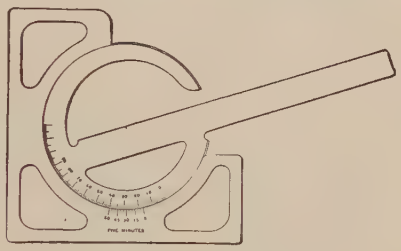

FIG. 712.—"Brown and Sharpe" protractor.

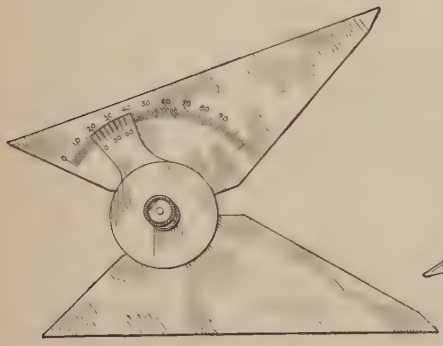

FIG. 713.—Lesh protractor triangle.

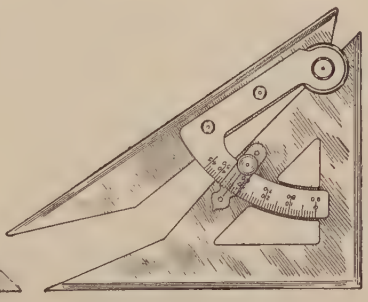

FIG. 714.—"New Facila" set-square.

If the glaze is removed from a celluloid irregular curve by rubbing with fine sandpaper, pencil marks may be made on it to facilitate drawing symmetrical curves.

350. Various Devices.—In making a drawing or map so large that it extends over the bottom edge of the board, a piece of halfround should be fastened to the board as in Fig. 719, to

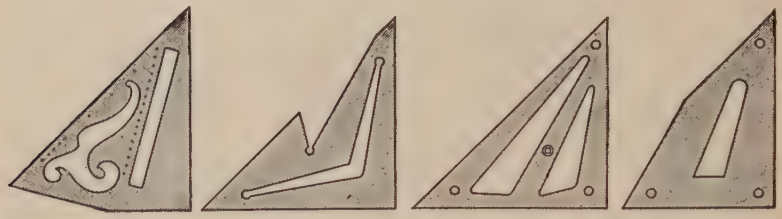

FIG. 715.—Line-o-graph, Crispin, Zange, and Rondinella "triangles."

prevent creasing the paper. A drawing board made especially for this kind of work has a rounded slot near the front edge

A steel edge for a drawing board may be made of an angle iron planed straight and set flush with the edge. A well-liked

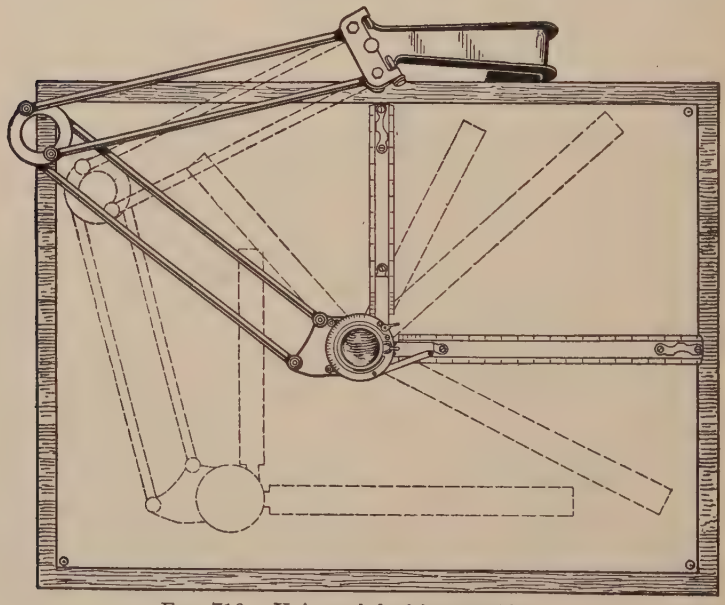

FIG. 716.—Universal drafting machine.

adjustable metal edge is made by L. S. Starrett & Co., Fig. 720. With a steel edge and a steel T-square very accurate plotting may be done. These are often used in bridge offices.

A temporary adjustment of a T-square may be made by putting a thumb tack in the head, Fig. 721.

If much ruling in red ink is done, a pen for the purpose with nickel silver blades is advisable.

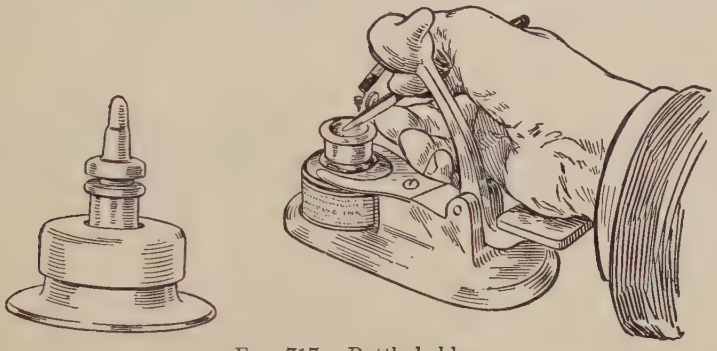

Fig. 717.—Bottle holders.

Painted aluminum sheets are being used instead of paper for large layout and assembly drawings where a fine degree of accuracy is required. The Studebaker Corporation specifies for this,

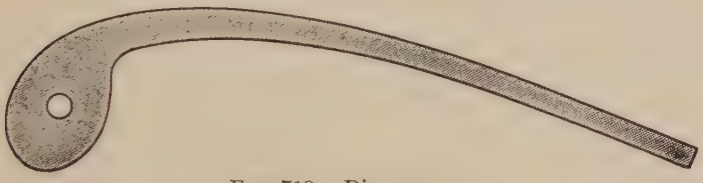

Fig. 718.—Diagram curve.

14 gage "half-hardened" aluminum. This is primed with one coat of shellac and given eight coats of Acme no-luster white, then rubbed with fine "wetordry" sandpaper and water.

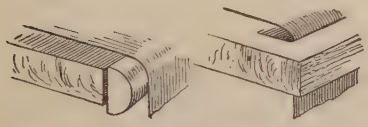

Fig. 719.—Rounded edges for large drawings.

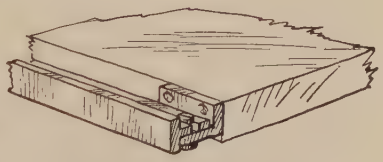

Fig. 720.—Starrett edge.

351. A Lettering Pen.—A very successful device for maintaining uniform weight of line in lettering, devised by Professor Geo. J. Hood, is illustrated in Fig. 722. Select a pen that best suits your

hand for the weight of stroke desired, and place it in the holder as usual. Take a brass strip from a paper fastener. Bend it to the shape shown in the figure and insert the end of the strip into the penholder. The curved end of the strip should barely touch the nibs of the pen. If it presses on the nibs they will be forced apart and the pen will not feed properly. Fill in a

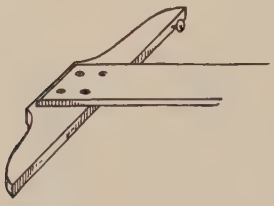

Fig. 721.—Temporary adjustment.

Fig. 722.—Lettering pen.

Fig. 723.—Henry tank pen.

drop of ink as shown. The upper and lower surfaces of the nibs should be kept entirely clean, the drop of ink feeding to the point only by way of the slit between the nibs. The rate of feed may be increased by moving the end of the strip closer to the point. Always clean thoroughly immediately after using.

Figure 723 is a reservoir pen used for lettering, called the "tank pen."

Section lining or "cross-hatching" is a difficult operation for the beginner but is done almost automatically by the experienced

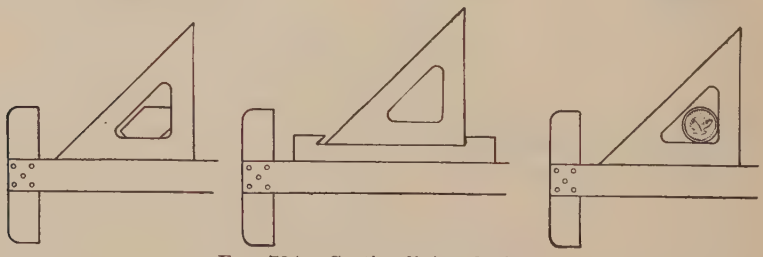

Fig. 724.—Section lining devices.

draftsman. A number of instruments for mechanical spacing have been devised. For ordinary work they are not worth the trouble of setting up, and a draftsman should never become dependent upon them, although they are of occasional value in careful drawing for reproduction. Three ways of making a section liner out of an ordinary triangle are shown in Fig. 724. The first two may be made of thin wood or celluloid cut in the

shapes indicated, and used by slipping the block and holding the triangle, then holding the block and moving the triangle. A coin may be used for the same purpose.

Erasing shields of metal or celluloid permit an erasure to be made in a small space. Slots for the same purpose may be cut from sheet celluloid or tough paper.

FIG. 725.—Double triangles.

Double triangles are very convenient in making pictorial drawings. Two forms are shown in Fig. 725, one for isometric and one for dimetric projection.

There are many other devices designed to save time in drafting rooms, such as the Bostich tacker, used instead of thumb tacks, the Wrico, Normograph and other stencil instruments for lettering, the Dexter draftsmen's pencil sharpener, electric erasing machines, etc., some of which may be found in instrument catalogues.

CHAPTER XXII

Bibliography of Allied Subjects

The present book has been written as a general treatise on the language of Engineering Drawing. The following short classified list of books is given both to supplement this book, whose scope permitted only the mention or brief explanation of some subjects, and as an aid to those who may desire the recommendation of a book on some branch of drawing or engineering.

Abbreviations used for Publishers' names:
A. B. P.—Architectural Book Publishing Co., New York.
Codex—Codex Book Company, Inc., New York.
Heath—D. C. Heath & Company, Boston.
Helb.—William Helburn, New York.
Ind. P.—Industrial Press, New York.
McG. H.—McGraw-Hill Book Company, Inc., New York.
Macm.—The Macmillan Company, New York.
P. P. P.—The Pencil Points Press, Inc., New York.
Pitman—Sir Isaac Pitman & Sons, London and New York.
U. P. C.—The U. P. C. Book Company, New York.
Van N.—The D. Van Nostrand Company, New York.
Wiley—John Wiley and Sons, New York.

Architectural Drawing

Esquié, Pierre.—Vignola. With English text by W. R. Powell. 76 pl. J. H. Jansen, Cleveland, 1921.

Field, W. B.—Architectural Drawing. 161 pp. 79 pl. McG. H., 1922.

Knobloch, P. G.—Good Practice in Construction. Part I, 52 pl. Part II, 52 pl. P. P. P. 1927.

Voss and Varney.—Architectural Construction. 2 V. Wiley, 1927.

Cams

Furman, F. De R.—Cams, Elementary and Advanced. 234 pp. Wiley, 1921.

Charts, Graphs and Diagrams

Brinton, W. C.—Graphic Methods for Presenting Facts. 371 pp. McG. H., 1914.

Dingman, C. F.—Plan Reading and Quantity Surveying. 201 pp. McG. H., 1924.

HASKELL, A. C.—How to Make and Use Graphic Charts. 539 pp. Codex 1920.

————.—Graphic Charts in Business. 451 pp. Codex, 1928.

KARSTEN, K. G.—Charts and Graphs. An introduction to Graphic Methods in the Control and Analysis of Statistics. 724 pp. Prentice-Hall, Inc., N. Y., 1923.

HEWES and SEWARD.—The Design of Diagrams for Engineering Formulas and the Theory of Nomography. 111 pp. McG. H., 1923.

LIPKA, J.—Graphical and Mechanical Computation. 264 pp. Wiley, 1918.

PEDDLE, J. B.—The Construction of Graphical Charts. 158 pp. McG. H., 1919.

RIGGLEMAN, J. R.—Graphic Methods for Presenting Business Statistics. 231 pp. McG. H., 1926.

SECRIST, H.—Statistics in Business. 137 pp. McG. H., 1921.

Descriptive Geometry

ANTHONY and ASHLEY.—Descriptive Geometry. 199 pp. Heath, 1926.

CHURCH, A. E.—Elements of Descriptive Geometry. 286 pp. Am. Bk. Co., 1911.

CUTTER, L. E.—Descriptive Geometry. 244 pp. McG. H., 1927.

HIGBEE, F. G.—The Essentials of Descriptive Geometry. 218 pp. Wiley, 1920.

————.—Descriptive Geometry Problems. 81 pp. Wiley, 1921.

HOOD, GEORGE J.—Geometry of Engineering Drawing. 290 pp. McG. H., 1926.

JORDAN and PORTER.—Descriptive Geometry. 349 pp. Ginn & Co., 1929.

KENISON and BRADLEY.—Descriptive Geometry. 407 pp. Macm., 1923.

KIRCHNER and EGGERS.—Descriptive Geometry. 183 pp. McG. H., 1928.

KIRBY, R. S.—Exercises in the Elements of Descriptive Geometry. 57 pp. Wiley, 1925.

SCHUMANN, C. H.—Descriptive Geometry. 249 pp. Van N., 1927.

SMITH, W. G.—Practical Descriptive Geometry. 281 pp. McG. H., 1925.

YOUNG and BAXTER.—Descriptive Geometry. 310 pp. Macm., 1921.

Gears and Gearing

ANTHONY, G. C.—The Essentials of Gearing. 109 pp. 15 pl. Heath, 1911.

BEALE, O. J.—Practical Treatise on Gearing. Brown & Sharpe Mfg. Co., Providence.

BROWN and SHARPE MFG. CO.—Catalogue of Machinery and Tools. Providence.

BUCKINGHAM, E.—Spur Gears. 451 pp. McG. H., 1928.

FELLOWS GEAR SHAPER CO.—Treatise on Commercial Gear Cutting. Springfield, Vt.

LOGUE and TRAUTSCHOLD.—American Machinist Gear Book. 353 pp. McG. H., 1922.

Handbooks

A great many "pocket size" handbooks, with tables, formulas and information are published for the different branches of the engineering profession, and draftsmen keep the ones pertaining to their particular line at hand for ready reference. Attention is called, however, to the danger of using handbook formulas and figures without understanding the principles upon which they are based. "Handbook designer" is a term of reproach applied not without reason to one who depends wholly upon these aids without knowing their theory or limitations.

Among the best known of these reference books are the following:

American Civil Engineers' Pocket Book, Mansfield Merriman. 195 pp. Wiley, 1920.
American Machinists' Handbook, Colvin and Stanley. 972 pp. McG. H., 1926.
American Society of Heating and Ventilating Engineers Guide (annually).
Architects and Builders' Pocketbook, Kidder-Nolan. 1955 pp. Wiley, 1921.
Civil Engineer's Pocketbook, J. C. Trautwine, 1576 pp. Trautwine Co., Phila., 1922.
Concrete Engineers' Handbook, Hool and Johnson. 800 pp. McG. H., 1918.
Estimating Building Costs, F. E. Barnes. 592 pp. McG. H., 1927.
Handbook of Building Construction, Hool and Johnson. 1650 pp. McG. H., 1929.
Handbook for Heating and Ventilating Engineers, J. D. Hoffman. 478 pp. McG. H., 1920.
Handbook for Machine Designers, Shopmen and Draftsmen, F. A. Halsey. 561 pp. McG. H., 1916.
Handbooks of various steel companies, as Cambria, Carnegie, etc.
Highway Engineers' Handbook, Harger and Bonney. 1721 pp. McG. H., 1927.
Machinery's Handbook. 1400 pp. Ind. P., 1920.
Mechanical Engineers' Handbook, L. S. Marks. 2000 pp. McG. H., 1924.
Mechanical Engineers' Pocketbook, Wm. Kent. 2247 pp. Wiley, 1923.
Standard Handbook for Electrical Engineers, F. F. Fowle. 2100 pp. McG. H., 1922.
Steel Construction. Amer. Inst. of Steel Const. Inc., N. Y. 384 pp. 1927.

Lettering

French and Meiklejohn.—The Essentials of Lettering. 94 pp. McG. H., 1912.
French and Turnbull.—Lessons in Lettering. 40 pp. each. McG. H., 1924.
Reinhardt, C. W.—Lettering for Draftsmen, etc., 39 pp. Van. N., 1917.
Svensen, C. L.—The Art of Lettering. 136 pp. Van N., 1927.

Machine Drawing and Design

ALBERT, C. D.—Machine Design Drawing Room Problems. 320 pp. Wiley, 1927.
BERARD and WATERS.—The Elements of Machine Design. 323 pp. 1927.
HOFFMAN and SCIPIO.—Elements of Machine Design. 327 pp. Ginn & Co., 1928.
KIMBALL and BARR.—Elements of Machine Design. 446 pp. Wiley, 1923.
LEUTWILER, O. A.—Elements of Machine Design. 607 pp. McG. H., 1917.
LEUTWILER, O. A.—Problems in Machine Design. 140 pp. McG. H., 1923.
MEASE and NORDENHOLT.—Design of Machine Elements. 237 pp. McG. H., 1923.
NORMAN, C. A.—Principles of Machine Design. Macm., 1924.
OLSEN, J. K.—Production design. 211 pp. McG. H., 1928.
SPOONER, H. J.—Machine Design, Construction and Drawing. 775 pp. Longmans, Green, N. Y., 1927.

Mechanism and Kinematics

DUNKERLEY, S.—Mechanism. 448 pp. Longmans, Green, 1911.
HECK, R. C. H.—Mechanics of Machinery—Mechanism. 550 pp. McG. H., 1925.
SCHWAMB, MERRILL and JAMES.—Elements of Mechanism. 372 pp. Wiley, 1921.
SMITH, W. G.—Engineering Kinematics. 282 pp. McG. H., 1923.

Perspective

GILL, B. A.—Perspective Delineation. 48 pp. 40 pl. A. B. P., 1921.
LONGFELLOW, W. P. P.—Applied Perspective. 97 pp. Houghton-Mifflin, N. Y., 1917.
LUBCHEZ, B.—Perspective. 129 pp. Van N., 1927.

Piping

SVENSEN, C. L.—A Handbook on Piping. 359 pp. 8 folding pl. Van N.' 1918.

Rendering

GUPTIL, A. L.—Drawing with Pen and Ink. 431 pp. P. P. P., 1928.
————.—Sketching and Rendering in Pencil. 186 pp. P. P. P., 1922.
JOHNSON, B.—The Technique of Pencil Drawing. 42 pp. 46 pl. Pitman, 1927.
MAGINNIS, C. D.—Pen Drawing. 121 pp. Helb., 1921.
MAGONIGLE, H. V.—Architectural Rendering in Wash. 160 pp. Scribners, 1926.
RICHMOND and LITTLEJOHNS.—The Technique of Water-colour Painting. 73 pp. 31 pl. Pitman. 1927.

Shades and Shadows

Buck, Ronan and Oman.—Shades and Shadows for Architects. 134 pp. McG. H., 1930.

McGoodwin, Henry K.—Architectural Shades and Shadows. 118 pp. Helb., 1922.

Sheet Metal Drafting

Kidder, F. S.—Triangulation Applied to Sheet Metal Pattern Cutting. 268 pp. U. P. C., 1920.

Kittredge, Geo. W.—The New Metal Worker Pattern Book. 518 pp. Scientific Book Corp., 1927.

Longfield, E. M.—Sheet Metal Drafting. 236 pp. McG. H., 1921.

Shop Practice

Burghardt, H. D.—Machine Tool Operation. Part I. 326 pp. Part II. 440 pp. McG. H., 1922.

Cincinnati Milling Machine Co.—A Treatise on Milling and Milling Machines. 441 pp. Cincinnati.

Dowd and Curtis.—Tool Engineering. V. 1. Jigs and Fixtures. 293 pp. V. 2. Fixtures for Turning, Boring and Grinding. 340 pp. V. 3. Punches, Dies and Gages. 341 pp. McG. H., 1925.

McCaslin, H. J.—Wood Pattern-making. 296 pp. McG. H., 1923.

VanDervoort, W. H.—Machine Shop Tools and Shop Practice. 552 pp. Scientific American, N. Y., 1918.

Viall, E.—Broaches and Broaching. 221 pp. McG. H., 1918.

Wendt, R. E.—Foundry Work. 236 pp. McG. H., 1928.

Structural Drawing and Design

Bishop, C. T.—Structural Drafting. 362 pp. Wiley, 1928.

Hool and Kinne.—Structural Engineers' Handbook Library. 6 V. McG. H., 1923–1924.

Ketchum, M. S.—Design of Highway Bridges. 566 pp. McG. H., 1923.

————.—Steel Mill Buildings. 640 pp. McG. H., 1921.

————.—Structural Engineers' Handbook. 1080 pp. McG. H., 1924.

Morris, C. T.—Designing and Detailing of Simple Steel Structures. 264 pp. McG. H., 1914.

Topographical Drawing

Daniels, Frank T.—A Textbook of Topographical Drawing. 144 pp. Heath, 1908.

Sloane and Montz.—Elements of Topographic Drawing. 188 pp. McG. H., 1930.

Stuart, E. R.—Topographical Drawing. 126 pp. McG. H., 1917.

American Standards

The American Standards Association is working on a large number of standardization projects. Of its many publications the following approved standards having to do with the subjects in this book are available at the time of this printing and may be purchased at cost at its offices, 29 West Thirty-ninth Street, New York. A complete list of American Standards will be sent by the Association on application.

A 13 —Identification of Piping Systems	50¢
A 38 —Steel Spiral Rods for Concrete Reinforcement, Sizes of	05¢
B 1a—Screw Threads for Bolts, Machine Screws, Nuts and Commercially Tapped Holes	50¢
B 2 —Pipe Thread	40¢
B 4a—Tolerances, Allowances and Gages for Metal Fits	50¢
B 5a—T-Slots, their Bolts, Nuts, Tongues and Cutters	35¢
B 6b—Tooth Form of Spur Gears	35¢
B 16a—Cast-iron Flanges and Flanged Fittings, Max. 125 lb	50¢
B 16b—Cast-iron Flanges and Flanged Fittings, Max. 250 lb	50¢
B 16c—Malleable-iron Screwed Fittings, Max. 150 lb	40¢
B 16d—Cast-iron Screwed Fittings, Max. 125 and 250 lb	35¢
B 16e—Steel Flanges and Flanged Fittings, Max. 250 to 1350	50¢
B 17a—Cold-finished Shafting, Diameters and Lengths	20¢
B 17b—Keys, Square and Flat Stock	20¢
B 17c—Design of Transmission Shafting	75¢
B 17d—Keys, Plain Taper Stock, Square and Flat	20¢
B 17e—Keys, Gib Head, Taper Stock, Square and Flat	20¢
B 17f—Woodruff Keys, Keyslots and Cutters	35¢
B 18a—Small Rivets	20¢
B 18b—Wrench Head Bolts and Nuts and Wrench Openings	35¢
B 18e—Round Unslotted Head Bolts	40¢
B 18f—Plow Bolts	35¢
B 18g—Tinners', Coopers' and Belt Rivets	35¢
B 26 —Screw Threads for Fire Hose Couplings	25¢
C 10 —Electrical Equipment of Buildings, Symbols for	10¢
Z 10e—Aeronautical Symbols	35¢
Z 10f—Mathematical Symbols	30¢
Z 17 —Preferred Numbers	20¢

APPENDIX

Tapers.—For round shapes taper means the difference in diameter for a given length. For rectangular sections the same principle applies whether the slope is one side or both sides, as at *B* or *C*, Fig. 726. There have been several so-called "standard" tapers in use, such as the Morse taper, the Brown and Sharpe taper, the Jarno taper etc. The American Standards Association's Committee on Small Tools is at present working on the standardization of tapers. As the Brown & Sharpe and Jarno tapers are disappearing in new work the indications are that the Morse taper will be maintained for certain purposes and that along with it a series of tapers with $\frac{3}{4}''$ to the foot will replace all other tapers. A table of Morse tapers is given below.

Taper pins, much used for fastening cylindrical parts and for dowelling, have a standard taper of $\frac{1}{4}''$ to the foot, as given in the table below.

Batter is the term used for the taper or slope of vertical supports, as piers or walls. It is expressed as the ratio of width to height, always giving the horizontal distance first.

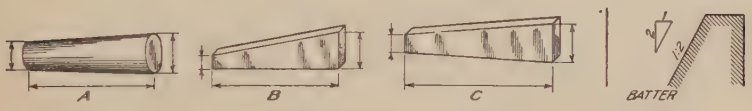

FIG. 726.—Tapers.

MORSE TAPERS

Number of taper	Diameter at small end	Diameter at large end	Length
0	.252	.356	2
1	.369	.475	$2\frac{1}{8}$
2	.572	.700	$2\frac{7}{16}$
3	.778	.938	$3\frac{1}{16}$
4	1.02	1.231	$4\frac{1}{16}$
5	1.475	1.748	$5\frac{7}{16}$
6	2.116	2.494	$7\frac{1}{4}$
7	2.75	3.27	10

DIMENSIONS OF TAPER PINS

Taper $\frac{1}{4}''$ per Ft. (.0208" per In.)

Size No.	Dia. large end	Drill size for reamer	Max length	Size No.	Dia. large end	Drill size for reamer	Max. length
0	.156	28	1	7	.409	$\frac{11}{32}$	$3\frac{3}{4}$
1	.172	25	$1\frac{1}{4}$	8	.492	$\frac{13}{32}$	$4\frac{1}{2}$
2	.193	19	$1\frac{1}{2}$	9	.591	$\frac{15}{32}$	$5\frac{1}{4}$
3	.219	12	$1\frac{3}{4}$	10	.706	$\frac{17}{32}$	6
4	.250	3	2	11	.857	$\frac{21}{32}$	$7\frac{1}{4}$
5	.289	$\frac{1}{4}$	$2\frac{1}{4}$	12	1.013	$\frac{13}{16}$	$8\frac{1}{4}$
6	.341	$\frac{9}{32}$	$3\frac{1}{4}$	13	1.233	$1\frac{1}{16}$	$10\frac{3}{4}$

Dimensions of Slotted Head Cap Screws

Compiled from American Standard

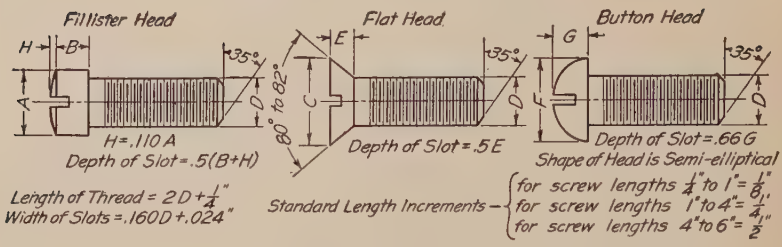

D Dia. of screw	1/4	5/16	3/8	7/16	1/2	9/16	5/8	3/4	7/8	1
A	3/8	7/16	9/16	5/8	3/4	13/16	7/8	1	1 1/8	1 1/16
B	11/64	13/64	1/4	19/64	21/64	3/8	27/64	1/2	19/32	21/32
C	1/2	5/8	3/4	13/16	7/8	1	1 1/8	1 3/8		
E	.146	.183	.220	.220	.220	.256	.293	.366		
F	7/16	9/16	5/8	3/4	13/16	15/16	1	1 1/4		
G (Nominal)	9/16	11/16	1/4	5/16	21/64	25/64	7/16	17/32		

Dimensions of Machine Screws

Compiled from Formulas of American Standards

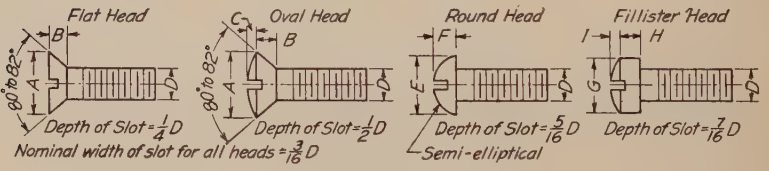

Nominal size	2	3	4	5	6	8	10	12	1/4	5/16	3/8
D = Diam.	.086	.099	.112	.125	.138	.164	.190	.216	.250	.3125	.375
Thds. per in. (coarse)	56	48	40	40	32	32	24	24	20	18	16
Thds. per in. (Fine)	64	56	48	....	40	36	32	28	28	24	24
A	.164	.190	.216	.242	.268	.320	.372	.424	.492	.618	.742
B	.046	.054	.061	.069	.076	.092	.107	.122	.142	.179	.215
C	.041	.048	.054	.061	.067	.080	.094	.107	.124	.156	.186
E	.154	.178	.202	.227	.250	.298	.346	.395	.458	.574	.689
F	.065	.073	.081	.089	.097	.113	.130	.146	.168	.207	.247
G	.132	.153	.175	.198	.217	.260	.303	.344	.402	.505	.606
H	.050	.058	.066	.075	.083	.099	.115	.132	.153	.193	.232
I	.023	.027	.030	.033	.037	.043	.049	.056	.064	.080	.096

Dimensions of Standard Steel and Wrought-iron Pipe

Nominal inside diameter, inches	Actual outside diameter, inches	Actual inside diameter, inches	Internal area, square inches	Thr'ds per inch	Dist. pipe enters, inches	Actual inside diam., inches	
						Extra heavy	Double extra
⅛	.405	.270	.057	27	5/16	.205	
¼	.540	.364	.104	18	7/16	.294	
⅜	.675	.494	.191	18	11/16	.421	
½	.840	.623	.304	14	¾	.542	.244
¾	1.05	.824	.533	14	1 1/16	.736	.422
1	1.315	1.048	.861	11½	1	.951	.587
1¼	1.66	1.38	1.496	11½	1 5/16	1.272	.885
1½	1.9	1.61	2.036	11½	1 7/16	1.494	1.088
2	2.375	2.067	3.356	11½	1 11/16	1.933	1.491
2½	2.875	2.468	4.78	8	1 7/8	2.315	1.755
3	3.5	3.067	7.383	8	2 1/16	2.892	2.284
3½	4	3.548	9.887	8	1	3.358	2.716
4	4.5	4.026	12.73	8	1 1/16	3.818	3.136
4½	5	4.508	15.961	8	1 7/16	4.28	3.564
5	5.563	5.045	19.986	8	1 5/16	4.813	4.063
6	6.625	6.065	28.89	8	1¼	5.751	4.875
7	7.625	7.023	38.738	8	1⅜	6.625	5.875
8	8.625	7.982	50.027	8	1 7/16	7.625	6.875
9	9.625	8.937	62.72	8	1 5/16	8.625	
10	10.75	10.019	78.823	8	1 1/16	9.75	

American Standard Cast Iron Screwed Fittings

For Maximum Working Saturated Steam Pressure of 125 Lbs. per Sq. In.
Approved by American Standards Association Dec. 1927

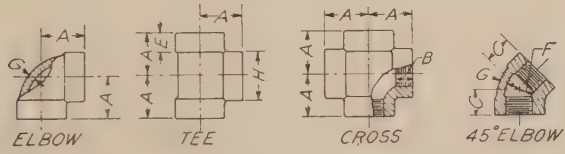

Nominal pipe size	A	B	C	E	F		G	H
		Min		Min	Min	Max	Min	Min
¼	0.81	0.32	0.73	0.38	0.540	0.584	0.110	0.93
⅜	0.95	0.36	0.80	0.44	0.675	0.719	0.120	1.12
½	1.12	0.43	0.88	0.50	0.840	0.897	0.130	1.34
¾	1.31	0.50	0.98	0.56	1.050	1.107	0.155	1.63
1	1.50	0.58	1.12	0.62	1.315	1.385	0.170	1.95
1¼	1.75	0.67	1.29	0.69	1.660	1.730	0.185	2.39
1½	1.94	0.70	1.43	0.75	1.900	1.970	0.200	2.68
2	2.25	0.75	1.68	0.84	2.375	2.445	0.220	3.28
2½	2.70	0.92	1.95	0.94	2.875	2.975	0.240	3.86
3	3.08	0.98	2.17	1.00	3.500	3.600	0.260	4.62
3½	3.42	1.03	2.39	1.06	4.000	4.100	0.280	5.20
4	3.79	1.08	2.61	1.12	4.500	4.600	0.310	5.79
5	4.50	1.18	3.05	1.18	5.563	5.663	0.380	7.05
6	5.13	1.28	3.46	1.28	6.625	6.725	0.430	8.28
8	6.56	1.47	4.28	1.47	8.625	8.725	0.550	10.63
10	8.08	1.68	5.16	1.68	10.750	10.850	0.690	13.12
12	9.50	1.88	5.97	1.88	12.750	12.850	0.800	15.47

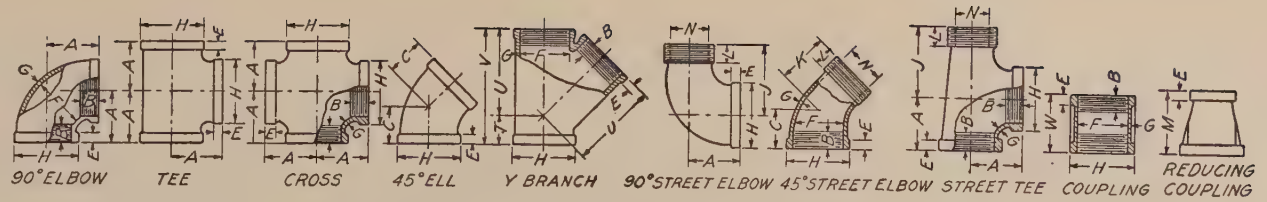

American Standard Malleable Iron Screwed Fittings

For Maximum Working Saturated Steam Pressure of 150 Lbs. per Sq. In. (Gage)

Approved by American Standards Association, December 1927

Nominal pipe size	A	B	C	E	F		G	H	J	K	L	M	N	T	U	V	W	Thickness of ribs couplings
		Min.		Min.	Min.	Max.	Min.	Min.			Min.		Max.					
⅛	0.69	0.25	0.68	0.200	0.405	0.435	0.090	0.693	1.00	0.84	0.2638	....	0.15	0.34	0.97	1.31	0.96	0.090
¼	0.81	0.32	0.73	0.215	0.540	0.584	0.095	0.844	1.19	0.94	0.4018	1.00	0.26	0.43	1.19	1.62	1.06	0.095
⅜	0.95	0.36	0.80	0.230	0.675	0.719	0.100	1.015	1.44	1.03	0.4078	1.13	0.37	0.50	1.43	1.93	1.16	0.100
½	1.12	0.43	0.88	0.249	0.840	0.897	0.105	1.197	1.63	1.15	0.5337	1.25	0.51	0.61	1.71	2.32	1.34	0.105
¾	1.31	0.50	0.98	0.273	1.050	1.107	0.120	1.458	1.89	1.29	0.5457	1.44	0.69	0.72	2.05	2.77	1.52	0.120
1	1.50	0.58	1.12	0.302	1.315	1.385	0.134	1.771	2.14	1.47	0.6828	1.69	0.91	0.85	2.43	3.28	1.67	0.134
1¼	1.75	0.67	1.29	0.341	1.660	1.730	0.145	2.153	2.45	1.71	0.7068	2.06	1.19	1.02	2.92	3.94	1.93	0.145
1½	1.94	0.70	1.43	0.368	1.900	1.970	0.155	2.427	2.69	1.88	0.7235	2.31	1.39	1.10	3.28	4.38	2.15	0.155
2	2.25	0.75	1.68	0.422	2.375	2.445	0.173	2.963	3.26	2.22	0.7565	2.81	1.79	1.24	3.93	5.17	2.53	0.173
2½	2.70	0.92	1.95	0.478	2.875	2.975	0.210	3.589	3.86	2.57	1.1375	3.25	2.20	1.52	4.73	6.25	2.88	0.210
3	3.08	0.98	2.17	0.548	3.500	3.600	0.231	4.285	4.51	3.00	1 2000	3.69	2.78	1.71	5.55	7.26	3.18	0.231
3½	3.42	1.03	2.39	0.604	4.000	4.100	0.248	4.843	5.09	3.35	1.2500	4.00	3.24	1.85	6.25	8.10	3.43	0.248
4	3.79	1.08	2.61	0.661	4.500	4.600	0.265	5.401	5.69	3.70	1.3000	4.38	3.70	2.01	6.97	8.98	3.69	0.265
5	4.50	1.18	3.05	0.780	5.563	5.663	0.300	6.583	6.86	4.44	1.4063	5.12	4.69	2.34	8.43	10.77	4.22	0.300
6	5.13	1.28	3.46	0.900	6.625	6.725	0.336	7.767	8.03	5.18	1.5125	5.86	5.67	2.66	9.81	12.47	4.75	0.336
8	....	1.47	....	1.125	8.625	8.725	0.403	9.995	....	....	1.7125	7.25	7.53	....	....	.....	5.75	0.403

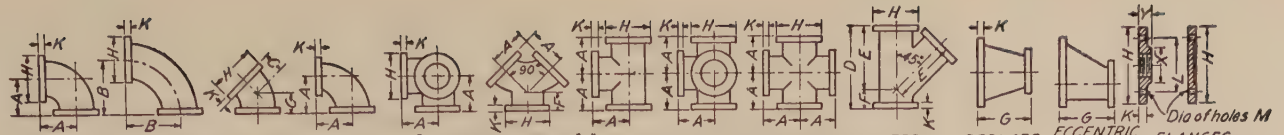

American Standard Cast Iron Pipe Flanges and Flanged Fittings

For Maximum Working Saturated Steam Pressure of 125 lbs. per sq. in. (Gage)

Approved by American Standards Association, February 1928

Nominal pipe size	A	B	C	D	E	F	G	H	K Min.	L	M	Number of bolts	Dia. of bolts	Length of bolts	X Min.	Y Min.
1	3½	5	1¼	7½	5¼	1⅛	...	4¼	7/16	3½	⅝	4	½	1½	1 11/16	0.68
1¼	3¾	5½	2	8	6¼	1½	...	4⅝	½	3½	⅝	4	½	1½	2 5/16	0.76
1½	4	6	2¼	9	7	2	...	5	9/16	3½	⅝	4	½	1½	2 7/16	0.87
2	4½	6½	2½	10½	8	2½	5	6	⅝	4¾	¾	4	⅝	2	3 1/16	1.00
2½	5	7	3	12	9½	2½	5½	7	11/16	5½	¾	4	⅝	2¼	3 7/16	1.14
3	5½	7¾	3	13	10	3	6	7½	¾	6	¾	4	⅝	2¼	4 ¼	1.20
3½	6	8½	3½	14½	11½	3	6½	8½	13/16	7	¾	8	⅝	2½	4 13/16	1.25
4	6½	9	4	15	12	3	7	9	15/16	7½	¾	8	⅝	2¾	5 5/16	1.30
5	7½	10¼	4½	17	13½	3½	8	10	15/16	8½	⅞	8	¾	2¾	6 7/16	1.41
6	8	11½	5	18	14½	3½	9	11	1	9½	⅞	8	¾	3	7 9/16	1.51
8	9	14	5½	22	17½	4½	11	13½	1 1/8	11¾	⅞	8	¾	3¼	9 11/16	1.71
10	11	16½	6½	25½	20½	5	12	16	1 3/16	14¼	1	12	⅞	3½	11 15/16	1.93
12	12	19	7½	30	24½	5½	14	19	1 ¼	17	1	12	⅞	3½	14 3/16	2.13

Widths and Heights of Standard Square and Flat Stock Keys with Corresponding Shaft Diameters

Approved by American Standards Association

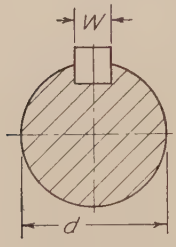

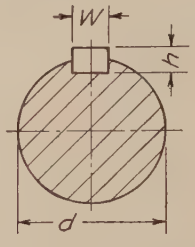

Shaft dia. d (inclusive)	Square stock keys—W	Flat stock keys W × L	Shaft dia. d (inclusive)	Square stock keys—W	Flat stock keys W × L
1/2 to 9/16	1/8	1/8 × 3/32	2 1/2 to 3 1/2	3/4	3/4 × 1/2
5/8 to 7/8	3/16	3/16 × 1/8	3 3/4 to 3 3/4	7/8	7/8 × 5/8
1 1/16 to 1 1/4	1/4	1/4 × 1/16	3 7/8 to 4 1/2	1	1 × 3/4
1 5/16 to 1 3/4	3/8	3/8 × 1/4	4 3/4 to 5 1/2	1 1/4	1 1/4 × 7/8
1 13/16 to 2 1/4	1/2	1/2 × 3/8	5 3/4 to 6	1 1/2	1 1/2 × 1
2 5/16 to 2 3/4	5/8	5/8 × 7/16			

Dimensions of Standard Gib Head Keys, Square and Flat

Approved by American Standards Association

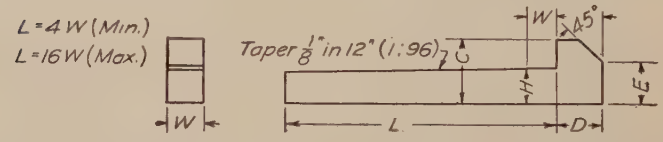

Dias. of shafts (incl.)	Square type					Flat type				
	Key		Gib head			Key		Gib head		
	W	H	C	D	E	W	H	C	D	E
1/2 to 9/16	1/8	1/8	1/8	7/32	5/32	1/8	3/32	5/16	1/8	1/8
5/8 to 7/8	3/16	3/16	1/16	9/32	7/32	3/16	1/8	1/4	3/16	5/32
1 1/16 to 1 1/4	1/4	1/4	7/16	11/32	1 1/32	1/4	1/16	5/16	1/4	3/16
1 5/16 to 1 3/4	3/8	3/8	11/16	15/32	11/32	3/8	1/4	7/16	3/8	1/16
1 13/16 to 2 1/4	1/2	1/2	7/8	19/32	3/8	1/2	3/8	5/8	1/2	7/16
2 5/16 to 2 3/4	5/8	5/8	1 1/16	23/32	3/4	5/8	7/16	3/4	5/8	1/2
2 7/8 to 3 1/4	3/4	3/4	1 1/4	7/8	7/8	3/4	1/2	7/8	3/4	5/8
3 3/8 to 3 3/4	7/8	7/8	1 1/2	1	1	7/8	5/8	1 1/16	7/8	3/4
3 7/8 to 4 1/2	1	1	1 3/4	1 3/16	1 5/16	1	3/4	1 1/4	1	13/16
4 3/4 to 5 1/2	1 1/4	1 1/4	2	1 7/16	1 7/16	1 1/4	7/8	1 1/2	1 1/4	1
5 3/4 to 6	1 1/2	1 1/2	2 1/2	1 3/4	1 3/4	1 1/2	1	1 3/4	1 1/2	1 1/4

American Standard Woodruff Keys (Approved Dec., 1930)

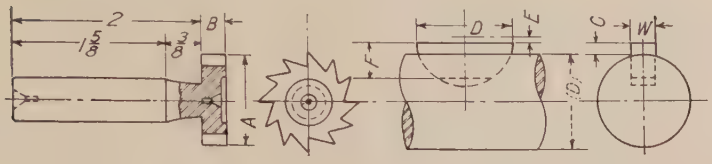

Key No.	Dia. of cutter A = D	Thickness of key W = B	Hgt. of key-way C	Key below center line E	Hgt. of key for flat bottom F	Key No.	Dia. of cutter A = D	Thickness of key W = B	Hgt. of key-way C	Key below center line E	Hgt. of key for flat bottom F
204						808	1				
304						809	1 1/8				
305						810	1 1/4				
404						811	1 3/8				
405						812	1 1/2				
406						1008	1				
505						1009	1 1/8				
506						1010	1 1/4				
507						1011	1 3/8				
606						1012	1 1/2				
607						1210	1 1/4				
608	1					1211	1 3/8				
609	1 1/8					1212	1 1/2				
807											

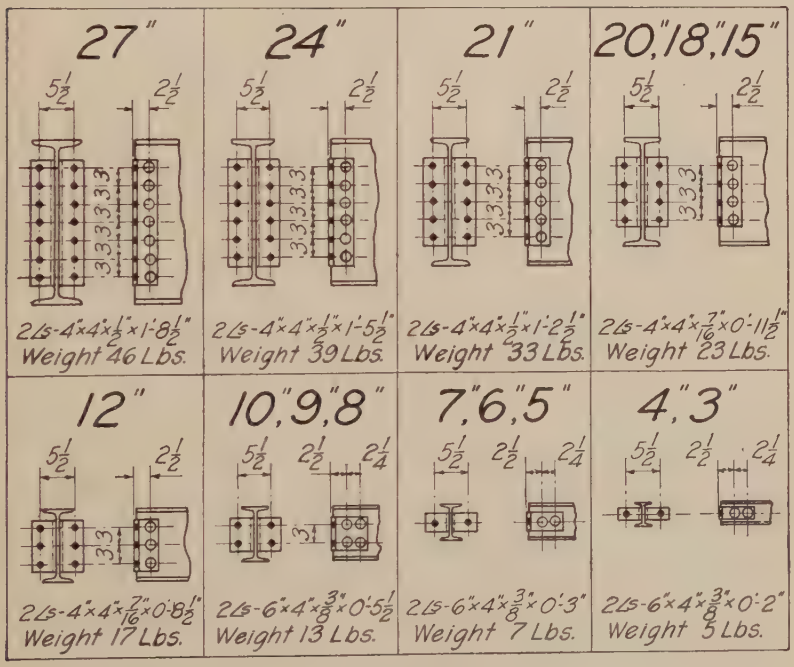

Fig. 727.—Standard beam connections.

Wire & Sheet-metal Gages
Dimensions in Decimal Parts of an Inch

Number of gage	1 American or Brown & Sharpe	2 Washburn & Moen or American Steel & Wire Co.	3 Birmingham or Stubs iron wire	4 Music wire	5 Twist drill sizes	6 Imperial wire gage	7 U. S. Std. for plate	Number of gage
0000000	.....	.4900	....	....	.....	.5000	.5000	0000000
000000	.5800	.4615	....	.004	....	.4640	.4688	000000
00000	.5165	.4305	.500	.005	.....	.4320	.4375	00000
0000	.4600	.3938	.454	.006	.....	.4000	.4063	0000
000	.4096	.3625	.425	.007	.....	.3720	.3750	000
00	.3648	.3310	.380	.008	.....	.3480	.3438	00
0	.3249	.3065	.340	.009	.....	.3240	.3125	0
1	.2893	.2830	.300	.010	.2280	.3000	.2813	1
2	.2576	.2625	.284	.011	.2210	.2760	.2656	2
3	.2294	.2437	.259	.012	.2130	.2520	.2500	3
4	.2043	.2253	.238	.013	.2090	.2320	.2344	4
5	.1819	.2070	.220	.014	.2055	.2120	.2188	5
6	.1620	.1920	.203	.016	.2040	.1920	.2031	6
7	.1443	.1770	.180	.018	.2010	.1760	.1875	7
8	.1285	.1620	.165	.020	.1990	.1600	.1719	8
9	.1144	.1483	.148	.022	.1960	.1440	.1563	9
10	.1019	.1350	.134	.024	.1935	.1280	.1406	10
11	.0907	.1205	.120	.026	.1910	.1160	.1250	11
12	.0808	.1055	.109	.029	.1890	.1040	.1094	12
13	.0720	.0915	.095	.031	.1850	.0920	.0938	13
14	.0641	.0800	.083	.033	.1820	.0800	.0781	14
15	.0571	.0720	.072	.035	.1800	.0720	.0703	15
16	.0508	.0625	.065	.037	.1770	.0640	.0625	16
17	.0453	.0540	.058	.039	.1730	.0560	.0563	17
18	.0403	.0475	.049	.041	.1695	.0480	.0500	18
19	.0359	.0410	.042	.043	.1660	.0400	.0438	19
20	.0320	.0348	.035	.045	.1610	.0360	.0375	20
21	.0285	.0317	.032	.047	.1590	.0320	.0344	21
22	.0253	.0286	.028	.049	.1570	.0280	.0313	22
23	.0226	.0258	.025	.051	.1540	.0240	.0281	23
24	.0201	.0230	.022	.055	.1520	.0220	.0250	24
25	.0179	.0204	.020	.059	.1495	.0200	.0219	25
26	.0159	.0181	.018	.063	.1470	.0180	.0188	26
27	.0142	.0173	.016	.067	.1440	.0164	.0172	27
28	.0126	.0162	.014	.071	.1405	.0148	.0156	28
29	.0113	.0150	.013	.075	.1360	.0136	.0141	29
30	.0100	.0140	.012	.080	.1285	.0124	.0125	30
31	.0089	.0132	.010	.085	.1200	.0116	.0109	31
32	.0080	.0128	.009	.090	.1160	.0108	.0102	32
33	.0071	.0118	.008	.095	.1130	.0100	.0094	33
34	.0063	.0104	.007	.100	.1110	.0092	.0086	34
35	.0056	.0095	.005	.106	.1100	.0084	.0078	35
36	.0050	.0090	.004	.112	.1065	.0076	.0070	36
37	.0045	.0085	....	.118	.1040	.0068	.0066	37
38	.0040	.0080	....	.124	.1015	.0060	.0063	38
39	.0035	.0075	....	.130	.0995	.0052	....	39
40	.0031	.0070	....	.138	.0980	.0048	.....	40

1. Recognized standard in U. S. for wire and sheet metal of copper and other metals except steel and iron.
2. Recognized standard for steel and iron wire. Called the U. S. Steel Wire Gage.
3. Formerly much used, now nearly obsolete.
4. American Steel & Wire Company's music (or piano) wire gage. Recommended by U. S. Bureau of Standards.
5. Known as the "Manufacturers' Standard."
6. Official British Standard.
7. Legalized U. S. Standard for iron and steel plate, although plate is now always specified by its thickness in decimals of an inch.

A committee of the American Standards Association is at present working on the "standardization of a method of designating the diameter of metal and metal alloy wire . . . and the establishment of standard series of nominal sizes . . . "

Decimal Equivalents of Fractions of an Inch

$\frac{1}{64}$ = .015625	$\frac{17}{64}$ = .265625	$\frac{33}{64}$ = .515625	$\frac{49}{64}$ = .765625
$\frac{1}{32}$ = .03125	$\frac{9}{32}$ = .28125	$\frac{17}{32}$ = .53125	$\frac{25}{32}$ = .78125
$\frac{3}{64}$ = .046875	$\frac{19}{64}$ = .296875	$\frac{35}{64}$ = .546875	$\frac{51}{64}$ = .796875
$\frac{1}{16}$ = .0625	$\frac{5}{16}$ = .3125	$\frac{9}{16}$ = .5625	$\frac{13}{16}$ = .8125
$\frac{5}{64}$ = .078125	$\frac{21}{64}$ = .328125	$\frac{37}{64}$ = .578125	$\frac{53}{64}$ = .828125
$\frac{3}{32}$ = .09375	$\frac{11}{32}$ = .34375	$\frac{19}{32}$ = .59375	$\frac{27}{32}$ = .84375
$\frac{7}{64}$ = .109375	$\frac{23}{64}$ = .359375	$\frac{39}{64}$ = .609375	$\frac{55}{64}$ = .859375
$\frac{1}{8}$ = .125	$\frac{3}{8}$ = .375	$\frac{5}{8}$ = .625	$\frac{7}{8}$ = .875
$\frac{9}{64}$ = .140625	$\frac{25}{64}$ = .390625	$\frac{41}{64}$ = .640625	$\frac{57}{64}$ = .890625
$\frac{5}{32}$ = .15625	$\frac{13}{32}$ = .40625	$\frac{21}{32}$ = .65625	$\frac{29}{32}$ = .90625
$\frac{11}{64}$ = .171875	$\frac{27}{64}$ = .421875	$\frac{43}{64}$ = .671875	$\frac{59}{64}$ = .921875
$\frac{3}{16}$ = .1875	$\frac{7}{16}$ = .4375	$\frac{11}{16}$ = .6875	$\frac{15}{16}$ = .9375
$\frac{13}{64}$ = .203125	$\frac{29}{64}$ = .453125	$\frac{45}{64}$ = .703125	$\frac{61}{64}$ = .953125
$\frac{7}{32}$ = .21875	$\frac{15}{32}$ = .46875	$\frac{23}{32}$ = .71875	$\frac{31}{32}$ = .96875
$\frac{15}{64}$ = .234375	$\frac{31}{64}$ = .484375	$\frac{47}{64}$ = .734375	$\frac{63}{64}$ = .984375
$\frac{1}{4}$ = .25	$\frac{1}{2}$ = .5	$\frac{3}{4}$ = .75	1 = 1.0

Metric Equivalents

Mm. to inches

Mm.	In.	Mm.	In.
1 =	.0394	17 =	.6693
2 =	.0787	18 =	.7087
3 =	.1181	19 =	.7480
4 =	.1575	20 =	.7874
5 =	.1968	21 =	.8268
6 =	.2362	22 =	.8661
7 =	.2756	23 =	.9055
8 =	.3150	24 =	.9449
9 =	.3543	25 =	.9843
10 =	.3937	26 =	1.0236
11 =	.4331	27 =	1.0630
12 =	.4724	28 =	1.1024
13 =	.5118	29 =	1.1417
14 =	.5512	30 =	1.1811
15 =	.5906	31 =	1.2205
16 =	.6299	32 =	1.2598

Inches to mm.

In.	Mm.	In.	Mm.
$\frac{1}{32}$ =	.79	$\frac{17}{32}$ =	13.49
$\frac{1}{16}$ =	1.58	$\frac{9}{16}$ =	14.28
$\frac{3}{32}$ =	2.38	$\frac{19}{32}$ =	15.08
$\frac{1}{8}$ =	3.17	$\frac{5}{8}$ =	15.87
$\frac{5}{32}$ =	3.96	$\frac{21}{32}$ =	16.66
$\frac{3}{16}$ =	4.76	$\frac{11}{16}$ =	17.46
$\frac{7}{32}$ =	5.55	$\frac{23}{32}$ =	18.25
$\frac{1}{4}$ =	6.34	$\frac{3}{4}$ =	19.04
$\frac{9}{32}$ =	7.14	$\frac{25}{32}$ =	19.84
$\frac{5}{16}$ =	7.93	$\frac{13}{16}$ =	20.63
$\frac{11}{32}$ =	8.73	$\frac{27}{32}$ =	21.43
$\frac{3}{8}$ =	9.52	$\frac{7}{8}$ =	22.22
$\frac{13}{32}$ =	10.31	$\frac{29}{32}$ =	23.01
$\frac{7}{16}$ =	11.11	$\frac{15}{16}$ =	23.81
$\frac{15}{32}$ =	11.90	$\frac{31}{32}$ =	24.60
$\frac{1}{2}$ =	12.69	1 =	25.39

Electrical Symbols.—Symbols for the diagrammatic representation of electrical apparatus and construction have not all been standardized, and various modifications will be found. Those given in Fig. 728 are simple

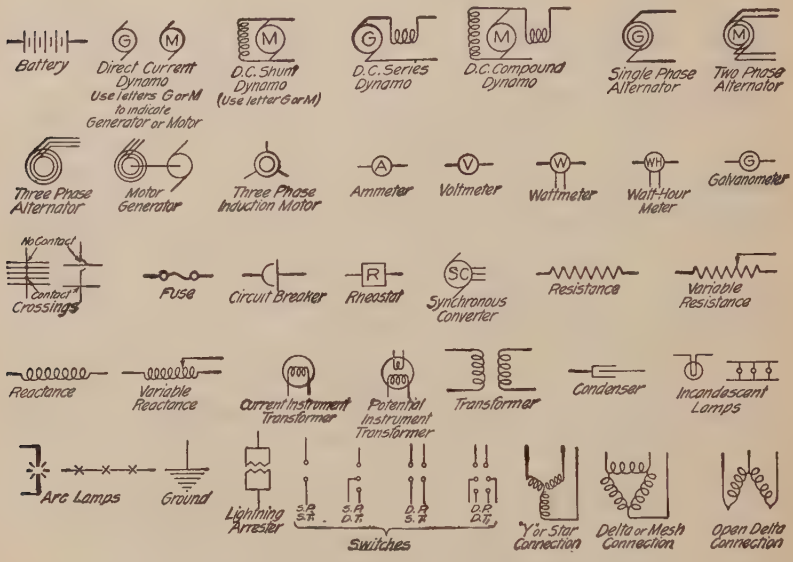

Fig. 728.—Electrical symbols.

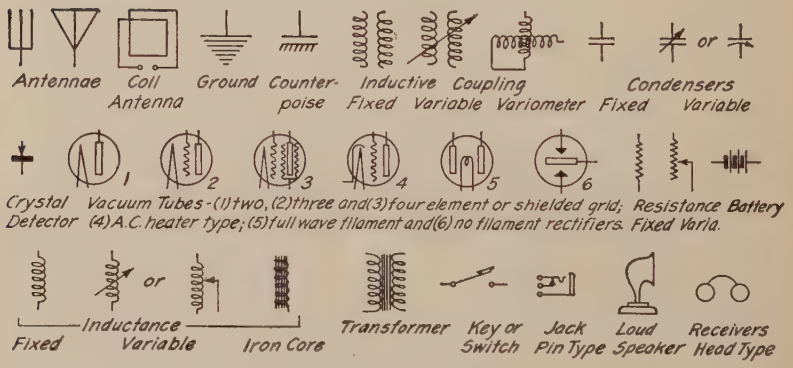

Fig. 729.—Radio symbols.

forms easily understood and many of which are in general use. For patent drawings, however, the "Rules of Practice," which illustrate eighty-nine required symbols, should be referred to.

Radio symbols are given in Fig. 729, and the American Standard wiring symbols as adopted in 1924 are shown in Fig. 730 on the opposite page.

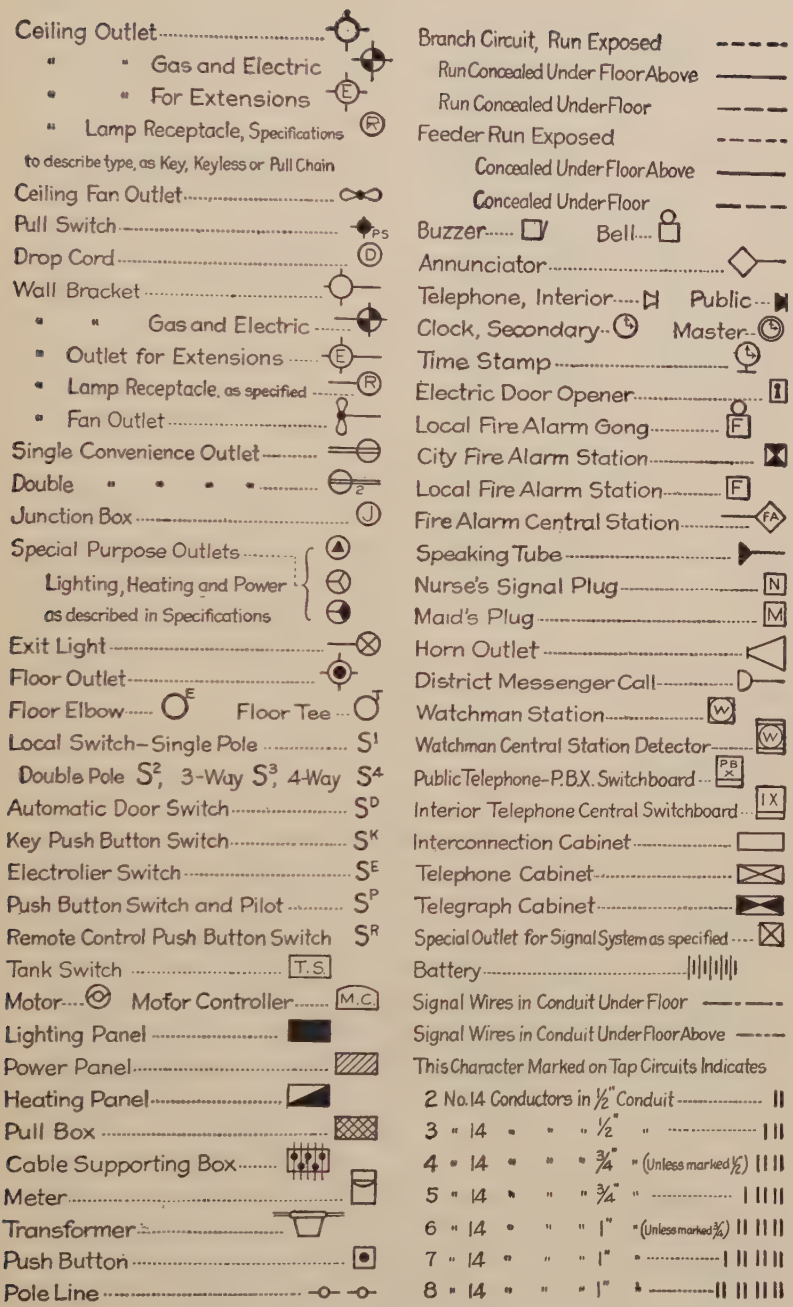

FIG. 730.—American standard wiring symbols.

Symbols for Materials.—Symbols for designating various materials in section and elevation are given in Fig. 731. They have been designed to avoid using different weights of lines, and are, except for steel, a part of a draft of an American Standard.

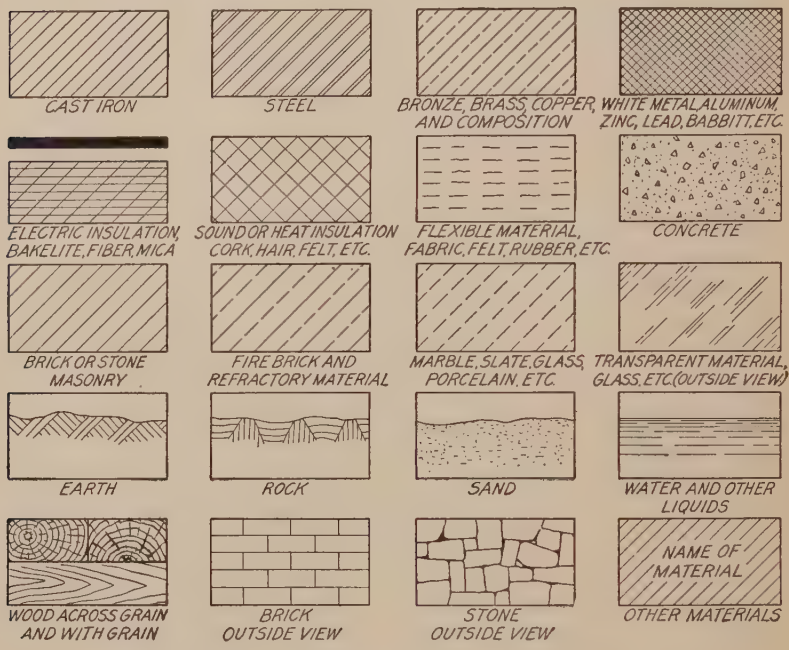

Fig. 731.—Symbols for materials in section.

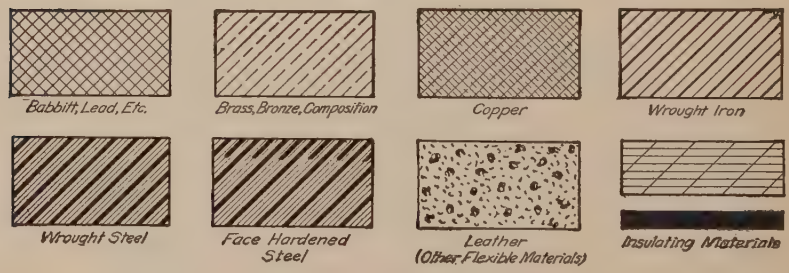

Fig. 732.—Symbols for materials in section, U. S. Navy.

A part of the codes of government standards of the Bureau of Steam Engineering and the Bureau of Construction U.S.N., is shown in Fig. 732. Cast iron, cast steel, glass and liquid are the same as in Fig. 731. The U. S. Navy still requires the use of its own symbols on assembly drawings submitted by bidders.

ABBREVIATIONS

A. C.—Alternating current
A.S.A.—Am. Standards Assn.
A.W.G.—American wire gage (B & S)
B.B.—Ball bearings
B.H.P.—Brake horsepower
B.W.G.—Birmingham wire gage
B & S—Brown & Sharpe gage
Bab.—Babbitt metal
Br.—Brass
Bz. or Bro.—Bronze
Cbore—Counterbore
C.I.—Cast iron
℄ or C.L.—Center line
cm.—Centimeter (s)
Cop.—Copper
C.P.—Circular pitch
C.R.S.—Cold rolled steel
Csk.—Countersink
C to C—Center to center
Cyl.—Cylinder
D. or Dia.—Diameter
D.C.—Direct current
Deg. or (°)—Degree (s)
D.Forg. or D.F.—Drop forging
D.P.—Diametral pitch
Drg. or Dwg.—Drawing
E.F.—Extra fine (threads)
f—Finish
ff.—File finish
Fil.—Fillister
ft. or (′)—Feet
G.I.—Galvanized iron
Gr.—Grind
Hd.—Head
Hex.—Hexagonal
H.P. or ℍP—Horsepower
Hrd & Gr.—Harden and grind
I—I-beam
I.H.P.—Indicated horsepower
in. or (″)—Inch (es)
K.W.—Kilowatt
∟ or ang.—Angle
L.H.—Left hand
m.—Meters
mm.—Millimeters
Mal. I.—Malleable iron
Min. or (′)—Minutes
M.S.—Machine steel
N.—National (Am.) Std.
N.C.—National Coarse (Th'ds)
NF—National Fine (Th'ds)
No. or #—Number
O.D.—Outside diameter
P—Pitch
Pat.—Pattern
Pcs.—Pieces
P. D.—Pitch diameter
Phos.Bro.—Phosphor bronze
Pl.—Plate
lbs. or #—Pounds
#/sq.in.—Pounds per square inch
R or Rad.—Radius
Req.—Required
R.H.—Right hand
r.p.m.—Revolutions per minute
S. or St.—Mild steel
S.A.E.—Society or Automotive Engineers
S.C.—Steel casting
Sc.—Screw
S.Forg.—Steel forging
Sq.—Square
Sq.in. or □″—Square inch (es)
Sq.ft. or □′—Square feet
Std.—Standard
S.Tube—Steel tubing
T—teeth
Thd.—Thread
Thds.—Threads
T.S.—Tool steel
U.S.F.—United States form (threads)(old)
U.S.S.—United States Standard (old)
W. I.—Wrought iron

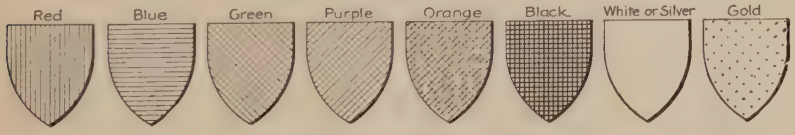

FIG. 733.—Symbols for colors.

Symbols for Colors.—Line symbols for the representation of colors were first used in heraldry, under the heraldic names of *gules*—red, *azure*—blue, *vert*—green, *purpure*—purple, *sable*—black, *tenny*—tawny, *sanguine*—dark red, *argent*—silver, and *or*—gold, and these have become the universal standard in all kinds of drawing. It is occasionally necessary on a black and white drawing to indicate the required colors of a fabric or design, as in the device illustrated in Fig. 49. This is notably true in patent office drawing, as mentioned on page 412. The symbols of Fig. 733 are the patent office standards, and, with the exception of orange, those used in heraldry.

Commercial Sizes.—The following notes give the commercial methods of specifying sizes of the items in the list. The material must, of course, always be specified.

Ball Bearings and *Roller Bearings.*—Give type, manufacturer's name and serial number.

Belting.—Give width, and thickness or ply.

Chain.—Give diameter of rod used.

Electrical Conduit.—Same as pipe.

Expansion Bolts.—Give diameter of bolt, not of casing.

Keys-Woodruff.—Specify by number. *Pratt and Whitney*, specify by number. *Square* and *flat*, give width, thickness and length.

Leather Fillets (for patterns).—Designated by numbers corresponding to the radii in sixteenths, thus No. 2 is $\frac{1}{8}$-inch radius.

Lock Washers.—Give type, nominal inside diameter, and thickness.

Machine Chains.—Give pitch, c. to c. of rivets, and width, inside for block or roller type and outside for rocker-joint type.

Nails (common).—Give size by number with letter *d*, as 10*d* (tenpenny = 10 lb. per thousand).

Pipe.—Give nominal inside diameter.

Pipe Fittings.—Give nominal size of pipe, material, and finish.

R. R. Rails.—Give height of section and weight per yard.

Rivets.—Give diameter, length, type of head, and material.

Rolled Steel Shapes.—Give name, essential dimensions, and weight per foot.

Rope.—Give largest diameter.

Shafting.—The best practice is to give the actual diameter.

Sheet Metal.—Give thickness by gage number, or preferably in thousandths of an inch (for $\frac{3}{16}$ inch and over, give thickness in fractions).

Split Cotter.—Give length of straight part.

Springs.—Helical, give outside diameter, gage or diameter of wire in thousandths, length and coils per inch when free.

Taper Pins.—Give number or diameter at large end, and length.

Tapered Pieces.—Give size at large end, taper per foot, and length.

Tubing.—Give outside diameter and thickness.

Washers.—If standard, give diameter of bolt or screw only.

Wire.—Give diameter by gage number or preferably in thousandths of an inch.

Wire Cloth.—Give number of meshes per lineal inch, and gage or diameter of wire.

Wood Screws.—Give length, diameter by number, and kind of head.

Special.—Manufactured articles or fittings, give manufacturer's name and catalogue number.

GLOSSARY OF SHOP TERMS FOR DRAFTSMEN

Anneal—To soften a metal piece and remove internal stresses by heating to its critical temperature and allowing to cool very slowly.

Arc weld (*v*)—To weld by electric arc process.

Bore (*v*)—To enlarge a hole with a boring tool as in a lathe or boring mill. Distinguished from *drill*.

Boss—A projection of circular cross section, as on a casting or forging.

Braze—To join by the use of hard solder.

Broach (*v*)—To finish the inside of a hole to a shape usually other than round. (*n*) A tool with serrated edges, pushed or pulled through a hole to enlarge it to a required shape.

Burnish—To smooth or polish by a rolling or sliding tool under pressure.

Bushing—A removable sleeve or liner for a bearing.

Carbonize—To prepare a low-carbon steel for heat treatment by packing in a box with carbonizing material, such as wood charcoal, and heating to about 2000° F. for several hours, then allowing to cool slowly.

Case-harden—To harden the surface of carbonized steel by heating to critical temperature and quenching, as in an oil or lead bath.

Castellate—To form into a shape resembling a castle battlement, as castellated nut. Often applied to a shaft with multiple integral keys milled on it.

Chamfer—To bevel a sharp external edge.

Chase (*v*)—To cut threads in a lathe, as distinguished from cutting threads with a die. (*n*) A slot or groove.

Chill (*v*)—To harden the surface of cast iron by sudden cooling against a metal mold.

Chip (*v*)—To cut or clean with a chisel.

Color-harden—To case harden to a very shallow depth, chiefly for appearance.

Core (*v*)—To form the hollow part of a casting, using a solid form made of sand, shaped in a core box, baked and placed in the mold. After cooling the core is easily broken up leaving the casting hollow.

Counterbore (*v*)—To enlarge a hole to a given depth. (*n*) The cylindrical enlargement of the end of a drilled or bored hole. 2. A cutting tool for counterboring, having a piloted end of the size of the drilled hole.

Countersink (*v*)—To form a depression to fit the conical head of a screw, or the thickness of a plate, so the face will be level with the surface. (*n*) A conical tool for countersinking.

Crown—Angular or rounded contour, as on the face of a pulley.

Die—One of a pair of hardened metal blocks for forming, impressing or cutting out a desired shape. 2. (thread) A tool for cutting external threads. Opposite of tap.

Die Casting (*n*)—A very accurate and smooth casting made by pouring a molten alloy (or composition, as Bakelite) usually under pressure into a metal mold or die. Distinguished from a casting made in sand.

Die Stamping (*n*)—A piece, usually of sheet metal, formed or cut out by a die.

Draw (*v*)—To form by a distorting or stretching process. 2. To temper steel by gradual or intermittent quenching.

Drill (*v*)—To sink a hole with a drill, usually a twist drill. (*n*) A pointed cutting tool rotated under pressure.

Drop Forging (*n*)—A wrought piece formed hot between dies under a drop hammer, or by pressure.

Face (*v*)—To machine a flat surface perpendicular to the axis of rotation on a lathe. Distinguished from *turn*.

Feather—A flat sliding key, usually fastened to the hub.

File (*v*)—To finish or trim with a file.

Fillet (*n*)—A rounded filling of the internal angle between two surfaces.

Fit (*n*)—The kind of contact between two machined surfaces, as (1) *drive*, *force* or *press*—when the shaft is slightly larger than the hole and must be forced in with sledge or power press.

(2) *shrink*—when the shaft is slightly larger than the hole, the piece containing the hole is heated, thereby expanding the hole sufficiently to slip over the shaft. On cooling the shaft will be seized firmly if the fit allowances have been correctly proportioned.

(3) *running* or *sliding*—when sufficient allowance has been made between sizes of shaft and hole to allow free running without seizing or heating.

(4) *wringing*—when the allowance is smaller than a running fit and the shaft will enter the hole by twisting it by hand.

Flange—A projecting rim or edge for fastening or stiffening.

Forge (*v*)—To shape metal while hot and plastic by a hammering process either by hand or machine.

Galvanize (*v*)—To treat with a bath of lead and tin to prevent rusting.

Graduate (*v*)—To divide a scale or dial into regular spaces.

Grind (*v*)—To finish or polish a surface by means of an abrasive wheel.

Kerf (*n*)—The channel or groove cut by a saw or other tool.

Key (*n*)—A small block or wedge inserted between shaft and hub to prevent circumferential movement.

Keyway, or **keyseat**—A groove or slot cut to fit a key. A key fits into a keyseat and slides in a keyway.

Knurl (*v*)—To roughen or indent a turned surface, as a knob or handle.

Lap (*n*)—A piece of soft metal, wood or leather charged with abrasive material, used for obtaining an accurate finish. (*v*) To finish by lapping.

Lug—A projecting "ear" usually rectangular in cross section. Distinguished from *boss*.

Malleable casting (*n*)—An ordinary casting toughened by annealing. Applicable to small castings, with uniform metal thicknesses.

Mill (*v*)—To machine with rotating toothed cutters on a milling machine.

Pack-harden—To carbonize and case-harden.

Pad—A shallow projection. Distinguished from *boss* by shape or size.

Peen (*v*)—To stretch, rivet or clinch over by strokes with the peen of a hammer. (*n*) The end of a hammer-head opposite the face, as **ball peen.**

Pickle (*v*)—To clean castings or forgings in a hot weak sulphuric acid bath.

Plane (*v*)—To machine work on a planer, having a fixed tool and reciprocating bed.

Planish (*v*)—To finish sheet metal by hammering with polished-faced hammers.

Polish (*v*)—To make smooth or lustrous by friction with a very fine abrasive.

Profile (*v*)—To machine an outline with a rotary cutter usually controlled by a master cam or die.

Punch (*v*)—To perforate by pressing a non-rotating tool through the work.

Relief (*n*)—The amount one plane surface of a piece is set below or above another plane, usually for clearance or for economy in machining.

Rivet (*v*)—To fasten with rivets. 2. To batter or upset the headless end of a pin used as a permanent fastening.

Ream (*v*)—To finish a drilled or punched hole very accurately with a rotating fluted tool of the required diameter.

Sand blast (*v*)—To clean castings or forgings by means of sand driven through a nozzle by compressed air.

Shape (*v*)—To machine with a shaper, a machine tool differing from a planer in that the work is stationary and the tool reciprocating.

Shear (*v*)—To cut off sheet or bar metal between two blades.

Sherardize (*v*)—To galvanize with zinc by a dry heating process.

Shim (*n*)—A thin spacer of sheet metal for adjusting.

Spin (*v*)—To shape sheet metal by forcing it against a form as it revolves.

Spline (*n*)—A long keyway. Sometimes, also a flat key.

Spot-face (*v*)—To finish a round spot on a rough surface, usually around a drilled hole to give a good seat to a screw or bolt head. Cut, usually $\frac{1}{16}$″ deep, by a rotating milling cutter.

Spot weld (*v*)—To weld in spots by means of the heat of resistance to an electric current. Not applicable to sheet copper or brass.

Steel casting (*n*)—Material used in machine construction. Is ordinary cast iron into which varying amounts of scrap steel have been added in the melting.

Swage (*v*)—To shape metal by hammering or pressure with the aid of a form or anvil called a swage block.

Sweat (*v*)—To join metal pieces by clamping together with solder between, and applying heat.

Tack weld (*v*)—To join at the edge by welding in short intermittent sections.

Tap (*v*)—To cut threads in a hole with a tapered tool called a tap, having threads on it and fluted to give cutting edges.

Temper (*v*)—To change the physical characteristics of steel by a process of heat treatment.

Templet—A flat pattern for laying out shapes, location of holes, etc.

Trepan (*v*)—To cut an outside annular groove around a hole.

Tumble (*v*)—To clean, smooth or polish castings or forgings in a rotating barrel or drum by friction with each other, assisted by added mediums, as scraps, "jacks," balls, sawdust, etc.

Turn (*v*)—To machine on a lathe. Distinguished from *face*.

Upset (*v*)—To forge a larger diameter or shoulder on a bar.

Weld (*v*)—To join two pieces by heating them to the fusing point and pressing or hammering together.

GLOSSARY OF STRUCTURAL TERMS FOR DRAFTSMEN

Batten Plate—A small plate used to hold two parts in their proper position when making up as one member.

Bay—The distance between two trusses or transverse bents.

Beam—A horizontal member forming part of the frame of a building or structure.

Bent—A vertical framework usually consisting of a truss or beam supported at the ends on columns.

Brace—A diagonal member used to stiffen a frame work.

Built-up-Member—A member built from standard shapes to give one single stronger member.

Cantilever—A beam, girder or truss overhanging its supports.

Chord—The principal member of a truss either on the top or bottom.

Clearance—Rivet driving clearance is distance from center of rivet to obstruction. Erection clearance is amount of space left between members for ease in assembly.

Clip-Angle—A small angle used for fastening various members together.

Column—A vertical compression member.

Cope—To cut out top or bottom of flanges and web so that one member will frame into another.

Cover Plate—A plate used in building up flanges in a built-up member to give greater strength and area, or for protection.

Crimp—To offset the end of a stiffener to fit over the leg of an angle.

Diagonals—Diagonal members used for stiffening and wind bracing.

Edge Distance—The distance from center of rivet to edge of plate or flange.

Fabricate—To cut, punch and sub-assemble members in the shop.

Fillers—Either plate or ring fills used to take up space in riveting two members where a gusset is not used.

Flange—The projecting portion of a beam, channel or solumn.

Gage Line—The center line for rivet holes.

Girder—Either a single or built-up horizontal member acting as a principal beam.

Girt—A beam usually bolted to columns to support the side covering or serve as window lintels.

Gusset Plate—A plate used to connect various members, such as in a truss.

Hip—The intersection between two sloping surfaces forming an external angle.

Knee Brace—A brace used to prevent angular movement.

Lacing or Lattice Bars—Bars used diagonally to space and stiffen two parallel members, such as in a built-up column.

Laterals—Members used to prevent lateral deflection.

Lintel—A horizontal member used to carry a wall over an opening.

Louvres—Metal slats either movable or fixed, as in a monitor ventilator.

Monitor Ventilator—A frame work at the top of the roof, that carries fixed or movable louvres.

Panel—The space between adjacent floor supports, or purlins in a roof.

Pitch—Center distance between rivets parallel to axis of member. Also for roofs, the ratio of rise to span.

Purlins—Horizontal members extending between trusses, used as beams for supporting the roof.

Rafters—Beams or truss members supporting the purlins.

Sag Ties—Tie rods between purlins in the plane of the roof to assist in carrying on the roof load.

Separator—Either a cast iron spacer or W. I. pipe on bolt for the purpose of holding members a fixed distance apart.

Span—Distance between centers of supports of a truss, beam or girder.

Splice—A longitudinal connection between the parts of a continuous member.

Stiffener—Angle, plate or channel riveted to a member to prevent buckling.

Stringer—A longitudinal member used to support loads directly.

Strut—A compression member in a framework.

Truss—A rigid framework for carrying loads, formed in a series of triangles.

Valley—The intersection between two sloping surfaces, forming a reentrant angle.

Web—The part of a channel, I beam or girder between the flanges.

INDEX

A

Abbreviations, 449
  for gearing, 228
Acme thread, 190
Adhesives, 418
Adjustable head T-square, 7
Air brush, 403
Alignment, test for, 5
  charts, 384
Alphabet of lines, 27
Alphabets, 42, 49–56
Alteneder, Theo., 4
  bottle holder, 424
  contour pen, 365
Aluminum sheets, 427
American standard, bolts, 189, 196, 199
  cap screws, 200
  fittings, 439, 440, 441
  keys, 442
  pipe thread, 206
  rivet heads, 205
  screw threads, 189, 193
  wiring symbols, 447
American Standards Association, 192, 203, 207, 444
  publications, 434
Ames lettering instrument, 37
Angular perspective, 310
Arc, tangent to circle, 64
    to circle and line, 64
    to two circles, 65
    to two lines, 64
  through three points, 63
  to rectify, 65
  welding, 240
Arch, five-centered, 70
  offset method for parabolic, 71
Architect's scale, 9
Architectural drawing, 321–344
    books on, 430
    characteristics of, 321
  models, 324
  symbols, 337, 338
Arrow heads, 172
A. S. M. E., 193
Assembly drawings, 215
  shop, 240
Auxiliary views, 90–94
Aviation symbols, 369
Axes, clinographic, 136
  conjugate, 68
  isometric, 124
  oblique, 132
  reversed, 130
Axonometric projection, 83, 123
  sketching, 303

B

Ball bearings, 182
Bar charts, 388
Base line dimensioning, 179
Batter, 437
Beam compasses, 422
  connections, 443
Ben Day film, 403
Bevel gear, to draw, 231
Bibliography, 430
Bill of material, 236, 352
Blue line prints, 400
  printing, 397
  prints, changes on, 399
    distribution of, 238
    from typewriting, 399
Bolts and nuts, 188
  American Standard, 195
  dimensioning, 202
  to draw, 197
  U. S. Standard, 198

Books, 430
Border pen, 423
Bottle holders, 424
Bow instruments, 7, 22
Braddock-Rowe triangle, 37
Breaks, conventional, 227
Brilliant line, 409
Bristol board, 11
British Association Thread, 190
Brown prints, 400
Brown & Sharpe, protractor, 425
  tapers, 437
  wire gage, 444
Building construction, 334
Buttress thread, 190

C

Cabinet drawing, 135
Cams, 233
  books on, 430
  problems, 283
Cap screws, 200, 201
  dimensions of, 201, 438
Castellated nuts, 198
Castings, 239
Cautions, 33
Cavalier projection, 131
Celluloid, for copying, 419
Charts, 377
  alignment, 384
  area and volume, 390
  bar, 388
  books on, 430
  classification, 377, 385
  compound bar, 389
  flow sheets, 385
  for display, 392
  for reproduction, 392
  graphs and diagrams, 377
  logarithmic, 379
  one-hundred percent bar, 388
  pie diagram, 389
  polar, 383
  popular, 387
  ratio, 381
  rectilinear, 378
  route, 385
  semi-logarithmic, 381
Charts, simple bar, 388
  standards for, 391
  to draw, 391
  trilinear, 384
Checking, architectural, 340
  machine drawing, 234
  problems in, 254
  structural drawing, 350
Chemical drawing, 241
Circle, in perspective, 320
  involute of, 74
  isometric, 128
  oblique, 135
  tangent to, 63
  to draw, 21
  to shade, 406
  to sketch, 298
Clinographic projection, 136
Cloth mounting, 417
Codes, for materials, 227
Colors, for mapping, 373
  symbols for, 449
Column details, 336
Commercial practice, 238
  sizes, 450
Compasses, beam, 422
  manipulation of, 21
  needle-point adjustment, 20
  patterns of, 5
  use of, 20
Concrete, reinforced, 355
Cone, development of, 154, 155
  to dimension, 175
  to shade, 409
Conic sections, 66
Conical helix, 189, 205
Conjugate axes, 68
Contour pen, 423
Contours, 365
Conventional symbols (see *Symbols*).
Copying drawings, 419
Core-box, 239
Cornice details, 334
Crispin triangle, 426
Cross-hatching, 98, 221, 395, 448
Cross-section paper, 301, 374, 378
Crystallography, 136
Culture, symbols for, 368

Curves, graphical, 377
irregular, 11, 424
ogee, 65
to ink with circle arcs, 71
use of, 28
Cycloid, 73
Cylinder, development of, 150
to shade, 409

D

Decimal equivalents, 445
Descriptive geometry, 2, 148
books on, 431
Design drawing, 215
Detail drawings, 217
architectural, 333
structural, 347
sections, 100
sketches, 302
Details, column, 336
cornice, 334
of building construction, 334
Developed views, 225
for piping, 210
Development, cylinder, 150
helix, 189
hexagonal prism, 150
oblique cone, 155
octagonal dome, 152
problems, 164
pyramid, 152, 153
right cone, 154
sphere, 158
surfaces, 148
transition pieces, 157
Diagrams, area and volume, 390
graphical, 377
pie, 389
Dimensioning, 171
architectural, 337
base line, 179
bolts and screws, 202
pictorial drawings, 184
problems, 187
rules for, 177
sketch, 300
structural drawing, 349
symbols, 171
Dimensioning, theory of, 173
Dimensions, bolts and screws, 202
cap screws, 201, 438
location, 175
machine screws, 438
pipe, 439
pipe fittings, 439, 440, 441
placing, 177
size, 174
taper pins, 437
tolerances in, 180
Dimetric projection, 131
Display charts, 392
drawings, 322
maps, 363
Dividers, hairspring, 6, 20
patterns of, 5
proportional, 421
use of, 19
Door symbols, 339
Dotted lines, 28, 89
sections, 100
Double-curved surfaces, 75, 148
to shade, 409
Drawing, architectural, 321–344
board, 8
glass, 420
rounded edge, 426
steel edge, 426
vertical, 424
cabinet, 135
chemical, 241
dimetric, 131
electrical, 241
for reproduction, 395, 400
from memory, 121, 306
ink, 10
isometric, 124
map, 358
oblique, 132
paper, 11
pencils, 10
perspective, 81, 309
pictorial, 122
reading a, 89
structural, 345
topographical, 358
Drawings, assembly, 215
detail, 217, 333

Drawings, display, 322
enlarging, 421
glossary of terms, 451
patent office, 410
phantom, 100, 225, 403
preserving, 422
relation to shop, 239
to check, 235
to copy, 419
working, 214, 325
Drop pen, 423
Duplication, 395

E

Elbows, development of, 150
Electrical drawing, 241
symbols, 446, 447
Elevations, architectural, 333
Ellipse, 67–70
approximate four centers, 70
eight centers, 70
concentric circle method, 68
conjugate axes, 68
definition of, 67
parallelogram method, 68
pin and string method, 67
tangent to, 69
trammel method, 67
Ellipsograph, 423
Encre a poncer, 419
Engineers' scale, 9
English T-square, 8
Epicycloid, 73
Erasers, 10
Erasing, 396
shields for, 429
Etchings, zinc, 401
Extension lines, 172

F

Facila set square, 425
Fake perspective, 304, 324
Farm survey, 359
Fastenings, 188
Faulty lines, 26
Filing drawings, 422
Fillets and rounds, 225
Finish marks, 173
First angle projection, 101
Fits, classification of, 194
Fittings, pipe, 208
Five-centered arch, 70
Fixatif, 422
Flanges, drilled, 223
Flexible curves, 424
Floating, 417
Floor plans, 325
Flow sheets, 385
Forge shop, 239
dimensions for, 181
Formulas, blueprint, 397
gear, 228
Foundation details, 334
Foundry, 239
Fractions, 41, 173
Framing plans, 329
Freehand drawing, 2, 296
French curves, 11
use of, 28
Frotté method, 419

G

Gages, wire and sheet metal, 444
Gears, 228
books on, 431
problems, 283
General drawings, 346
Geometrical shapes, 75
Geometry, applied, 60
books on, 431
descriptive, 2, 148
Glossary, of shop terms, 451
of structural terms, 454
Gore method, sphere, 158
Graphical charts, 377
books on, 430
Grouping of details, 218

H

Hachures, 366
Half sections, 99
isometric, 130
Handbooks, 432
Helical springs, 205
Helix, 188, 189

Heraldic symbols, 449
Hexagon, to construct, 62
Highway sheet, 375
Hill shading, 366
Hip rafter, 152
Hyperbola, 66, 72
  equilateral, 72
Hypocycloid, 73

I

Ink, colored, 373, 395
  drawing, 10
  lines, to remove, 396
  rubbing, 419
  stick, 10
Inking, 24, 25
  on tracing cloth, 395
  order of, 221
  shaded drawings, 406
  structural drawings, 349
Inspection department, 240
Instruments, care of, 33
  exercises for, 30–32
  for sketching, 297
  selection of, 3
  special, 422
  use of, 13
Intersections, cylinder and cone, 163
  plane and surface of revolution, 163
  prism and cone, 161
    and sphere, 161
  surfaces, 158
  two cylinders, 160
  two prisms, 159
Involutes, 74
Irregular curves, 11, 424
  use of, 28
Isometric drawing, 124
  projection, 123
  shade lines, 407
  sketching, 303

J

Jack-knife pen, 6
Jarno taper, 437
Jig problem, 281
Jigs and fixtures, 239
Joints, riveted, 204

K

Keys, 202
  dimensions of, 442, 443
Kinematics, books on, 433
Knuckle thread, 190
Knurling, 410

L

Landscape maps, 372
Laying out the sheet, 16
Left-handed person, 15
Lesh protractor triangle, 425
Lettering, 34–59
  architectural, 53, 341
  books on, 432
  civil engineers', 52
  composition, 45
  exercises, 56–59
  map, 373
  materials, 37
  pens, 36, 423, 427
  position of pen for, 38
  single stroke, 35
  spacing lines for, 37
Letters, architects', 52
  commercial gothic, 48
  compressed, 35, 50, 53, 55
  extended, 35, 55
  general proportions, 35
  inclined Roman, 56
  modern Roman 52, 54
  old Roman, 50, 51, 52
  rule for shading Roman, 52
  single stroke, 35
    inclined, 42, 43
    stump, 56
    vertical, 38
Limits and fits, 179
Line-o-graph, 426
Line shading, 408
Lines, alphabet of, 27
  contour, 365
  dimensioning, 171
  dotted, 28, 89

Lines, extension, 172
faulty, 26
to divide by trial, 19
with scale, 60
to draw parallel, 18
perpendicular, 18
true length of, 97
Lithography, 404
Locknuts, 199
Logarithmic charts, 379
spiral curves, 11

M

Machine drawing, 214
books on, 433
screws, 200
dimensions of, 438
shop, 240
dimensions for, 181
terms, 451
sketching, 296
Map drawing, 358
Maps, classification of, 358
colors for, 373
contour, 365
display, 363
landscape, 372
property, 360
quadrangle, 371
reproduction of, 404
sewer, 363
U. S. Geological Survey, 371
Masonry structures, 354
Materials, bill of, 236
codes for, 227
Measurements, in perspective, 312
Measuring, 300
Mechanical drawing, 2
Mechanism, books on, 433
Memory, drawing from, 121, 306
Metric equivalents, 445
system, 182
Models, architectural, 324
Morse taper, 437
Mosaic, 323
Mounting, paper on cloth, 417
thin paper, 418

N

National Standard screw threads, 193, 194
Nomographs, 384
Nordberg keys, 203
Notes and specifications, 183, 339

O

Oblique projection, 83, 131
sketching, 304
Octagon, to construct, 62
Offset construction, 126
Ogee curve, to draw, 65
Oil and gas symbols, 369
stones, 415
Old Roman alphabet, 51
Order of inking, 221
shaded drawings, 406
of penciling, 218
Orthographic projection, 82, 85
violations of theory, 222
Osborn symbols, 351
Ozalid process, 400

P

Pantograph, 420, 421
Paper, Bristol Board, 11
blue print, 397
cross-section, 301, 374, 378
drawing, 11
for charts, 392
for patent drawings, 411
to mount, 417
to stretch, 416
Whatman's, 11
Parabola, 66, 71
Parallel perspective, 305
Patent Office drawings, 410
Pattern shop, 239
dimensions for, 180
Patterns, 148, 239
Pen, ruling, 6, 24
to sharpen, 415
use of, 24
Pencil, estimating proportion with, 305

Pencil, position for sketching, 298
sharpening, 14
Penciling, order of, 218
Pencils, grades of, 10
Pens, border, 423
contour, 423
drop, 423
lettering, 36, 423, 428
mapping, 367
Payzant, 425
railroad, 423
red ink, 427
rivet, 423
ruling, 6, 24
Pentagon, to construct, 62
Perspective, 81, 309
angular, 310
books on, 433
classes of, 310
fake, 304, 324
inclined lines, 319
measuring points, 316
parallel, 305, 314
perspective plan method, 318
revolved-plan method, 315
sketches, 343
sketching, 304
Phantom drawings, 100, 225, 403
Photographs, reproduction of, 403
Photostat, 400
Pictorial drawing, 122
dimensioning, 184
sketching, 143
Pie diagram, 389
Pipe, 205
dimensions of, 439
drawings, 209
fittings, 207, 439, 440, 441
Piping, books on, 433
Pitch, thread, 191
Pivot joint, 4, 5
Plans, architectural, 325–329
Plat of a survey, 359
Plats, 359
city, 363
of subdivision, 362
Poché, 323
Polar charts, 383
Polygon, to construct, 63
Polygon, to transfer, 61
Pricking, 419
Prism, to develop, 150
Problems, architectural, 342
bolts and screws, 211
cams and gears, 283
charts and diagrams, 393
checking, 254
development, 164
dimensioning, 187
electrical, 289
geometrical, 76–80
helices, 211
intersection, 170
isometric, 138
oblique, 138
orthographic projection, 102–121
piping, 211
sketching, 213, 308
use of instruments, 30
working drawings, 242–295
Profiles, 374
Profiling, 322
Projection, auxiliary, 90
axonometric, 83, 123
clinographic, 136
dimetric, 131
first angle, 101
isometric, 123
oblique, 83, 131
orthographic, 82, 85
tabular classification, 84
theory of, 81
trimetric, 131
Proportional dividers, 421
Protractor, 423
Purchaser, dimensions for, 181
Pyramid, to develop, 152, 153
to dimension, 175

Q

Quadrangle maps, 371

R

Rack, to draw, 231
Radio symbols, 446
Railroad pen, 423
Reading exercises, 145, 146, 147
Record strip, 237

Rectilinear charts, 378
Reflected views, 322
Reinforced concrete, 355
Reinhardt, C. W., 43
Relief, symbols for, 370
Rendering, 323
  books on, 433
Reproduction, charts, 392
  drawings for, 395, 400
Reversed axes, 130
Revolution, 95, 96
Revolved sections, 100
Ribs in section, 223
Rivet pen, 423
Rivets, 204, 205, 350
Roman letters, 50
Rondinella triangle, 426
Route chart, 385
Rubber-band method, 422
Rubbing, to copy by, 419
Ruled surfaces, 148
Rules, for dimensioning, 177
Rules of Practice, 411
Ruling pens, 6
  to sharpen, 415
  use of, 24

S

S. A. E. Standard threads, 194, 195, 199
Scale, isometric, 124
  use for dividing a line, 60
Scales, architects', 9
  civil engineers', 9
  for structural drawings, 347
  list of sizes used, 23
  mechanical engineers', 9
  metric system, 182
  profile, 376
  sections of, 9
  use of, 22
Screw threads, 189, 192
  American Standard, 193
  classification of fits, 194
  conventional, 192
  extra fine, 195
  identification symbols, 194
  to draw, 191
Screws, cap, 200, 438
Screws, machine, 200, 438
  set, 200, 201
  various, 202
  wood, 201
Section lining, 98
  devices, 428
Sectional views, 98
Sections, 98–101, 221
  architectural, 333
  isometric, 130
  masonry, 354, 357
  on tracing cloth, 395
  reinforced concrete, 355
  ribs in, 223
  symbols for materials, 448
  violations of theory, 222
Semi-logarithmic charts, 381
Serpentine, 205
Set screws, 200
Shade lines, 405
  on maps, 363
  on patent drawings, 412
  on pictorial drawings, 407
Shades and shadows, books on, 434
Sharpening a pen, 415
  pencil, 14
Sheet metal, books on, 434
  development, 148
  gage sizes, 444
Shop assembly, 240
  practice, books on, 434
  terms, glossary of, 451
Silhouetting, 322
Single-curved surfaces, 148
Site, plan of, 325
Sketches, kinds of, 301
Sketching, architectural, 322
  axonometric, 303
  from memory, 306
  oblique, 304
  perspective, 304
  pictorial, 137, 302
  technical, 296
Slope lines for lettering, 42
Specifications, 183, 214
  architectural, 321, 339
Sphere, isometric, 130
  to develop, 158
  to shade, 410

Spiral of Archimedes, 74
Springs, helical, 205
Spur gear, to draw, 229
Square thread, 190
Stairways, to draw, 329
Stevens' method, 129
Stick ink, 10
Stretching paper, 416
Stretchout line, 150
Structural drawing, 345
  books on, 434
  glossary, 454
  practice, 349
Structures, masonry, 354
  timber, 352
Studs, 199
Style in drawing, 218
Subdivision, plat of, 362
Surfaces, classification of, 148
  development of, 148
  intersection of, 158
Survey, plat of, 359
Swede pen, 6
Symbols, architectural, 337, 338
  aviation, 369
  colors, 449
  conventional, 226
  culture, 368
  dimensioning, 171
  door, 339
  electrical, 446, 447
  for threads, 192
  masonry, 354
  materials, 227, 448
  oil and gas, 369
  on patent drawings, 412
  radio, 446
  relief, 370
  rivets, 351
  topographic, 368
  vegetation, 371
  water features, 370
  welding, 241
  window, 339
  wiring, 447

T

T-square, 7, 8
  use of, 15
Tangent, to a circle, 63
  to an ellipse, 69
  to a hyperbola, 72
  to a parabola, 72
Tangents, correct and incorrect, 26
  problems on, 77
Tapers, 437
Technical sketching, 2, 296
Technique, in architectural drawing, 321
  in sketching, 298
  use of instruments, 13
Test for alignment, 5
  for triangles, 8
  for T-squares, 8
Threads, American Standard, 193
  forms of, 189
  pipe, 206
Thumb tacks, 10
Timber structures, 352
Tinting, 417
Tipping, 417
Titles, 46
  architectural, 341
  map, 373
  on graphical charts, 378
  printed, 237
  structural, 352
  working drawings, 236
Tolerances, 180
  checking, 235
Tool-designing department, 239
Topographical drawing, 358
  books on, 434
Tracing, 220, 395
  cloth, 395
  paper, to mount, 417
Tracings, duplication of, 400
  to clean, 396
  to file, 422
Transition pieces, 157
Transparentizing, 399
Transfer by rubbing, 419
Triangle, Braddock-Rowe, 37
  to construct, 61
Triangles, combination, 426
  double, 429
  test for accuracy, 8
  use of, 17, 18

Triangulation, 154
Trilinear charts, 384
Trimetric projection, 131
True length of line, 97
Twist drill sizes, 444

U

Unions, 208
Unit assembly drawing, 217
U. S. Geological Survey, 371
U. S. Standard bolts and nuts, 198
Universal drafting machine, 424

V

Valves, 208
Van Dyke paper, 400
Vanishing points, 310
Vegetation, symbols for, 371
Views, auxiliary, 90–94
  choice of, 214
  developed, 225
  in sketching, 299
  orthographic, 85
  reflected, 322
  revolved, 225
  sectional, 98
  superposed, 322, 335
Violations of theory, 222, 224
  problems, 252

W

Walls, thickness of, 329
Warped surfaces, 75
Washers, 200
Water color, 373, 417
  features, symbols, 370
  lining, 367
Wax process, 403
Welding, arc, 240
Whitworth thread, 189
Window sections and symbols, 339
Wire gages, 444
Wiring symbols, 447
Witness lines, 172
Wood screws, 201
Woodruff keys, 203, 443
Working drawings, 214
  architectural, 325
  classes of, 215
  highway, 375
  problems, 242–295
  titles, 236
  to make, 218
Worm thread, 190

Z

Zange triangle, 426
Zinc etching, 401
Zone method of development, 158